PRODUCT CATALOGUE 2020

World wide wholesaler of spare parts for trucks and buses

Est. 1976

PARTS FOR:
SCANIA
+ INFO SECTION

PARTS FOR:
VOLVO

PARTS FOR:
MERCEDES

PARTS FOR:
MAN

PARTS FOR:
DAF

↖
← **Click car make link to get to the right section.**
↙ (Home button at your keyboard gets you back to this page)

The printed book version is also available.
Order it here: hd-parts@hd-parts.fi

Permanent links for this catalogue:
http://links.hd-parts.fi/catalogue.pdf
https://www.hd-parts.fi/download

This PDF version is continuously updated.
UPDATED: 15.01.2021
Next update will be at February 2021

HD - PARTS

HEAVY DUTY

HD - PARTS

FINLAND

01 Engine

SCANIA
VOLVO
MERCEDES
IVECO
MAN
DAF

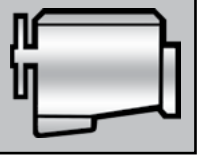

02 Cooling

SCANIA
VOLVO
MERCEDES
IVECO
MAN
DAF

03 Fuel- and exhaust system

SCANIA
VOLVO
MERCEDES
IVECO
MAN
DAF

04 Clutch

SCANIA
VOLVO
MERCEDES
IVECO
MAN
DAF



05 Transmission

SCANIA
VOLVO
MERCEDES
IVECO
MAN
DAF

06 Propeller shaft

SCANIA
VOLVO
MERCEDES
IVECO
MAN
DAF

07 Front axle

SCANIA
VOLVO
MERCEDES
IVECO
MAN
DAF

09 Hubs

SCANIA
VOLVO
MERCEDES
IVECO
MAN
DAF

10 Brakes

SCANIA
VOLVO
MERCEDES
IVECO
MAN
DAF

11 Chassis parts

SCANIA
VOLVO
MERCEDES
IVECO
MAN
DAF

12 Suspension

SCANIA
VOLVO
MERCEDES
IVECO
MAN
DAF

13 Steering

SCANIA
VOLVO
MERCEDES
IVECO
MAN
DAF

16 Electrical parts

SCANIA
VOLVO
MERCEDES
IVECO
MAN
DAF

17 Switches

SCANIA
VOLVO
MERCEDES
IVECO
MAN
DAF

18 Cabin

SCANIA
VOLVO
MERCEDES
IVECO
MAN
DAF

19 Rear mudguards

SCANIA
VOLVO
MERCEDES
IVECO
MAN
DAF

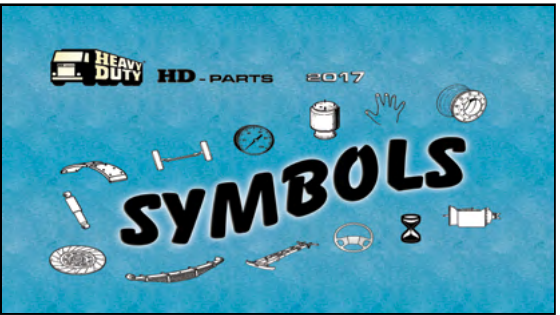

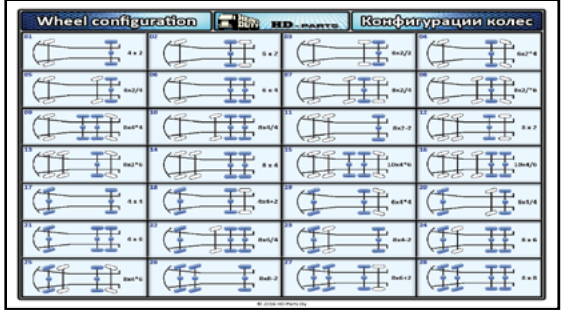

Click car make links and you will get to the right section easier.

To get back to this quick index:
Home button and then page down button.

Alternative search method.

Нажмите на название марки грузовика и вы перейдёте в правильный раздел.

Для возвращения обратно на эту индекс страницу: Нажмите кнопку Home, а после кнопку page down.

Альтернативный метод поиска.





In this e-catalogue you do not need table of contents.
You can easily search products with the product number
or even with the original equipment reference number !

Try it: Hit the **Ctrl** and **F** at the same time and
then the **product number** and **Enter**.

At the first time the search could take some time but it goes faster the more you use it.

Ctrl + F

Tässä sähköisessä luettelossa et tarvitse sisällysluetteloa.
Voit helposti etsiä tuotteita tuotenumerolla tai jopa
alkuperäisvalmistajan viitenumerolla !

Kokeile: Paina **Ctrl** ja **F** samaan aikaan ja
sitten **tuotenumero** ja **Enter**.

Ensimmäinen haku voi hieman kestää mutta se nopeutuu mitä enemmän sitä käytät.

Ctrl + F

В нашем электронном каталоге вам не понадобится содержание.
Вы легко сможете найти интересующие вас позиции с помощью
товарного номера или даже оригинального номера!

Как это работает: Нажмите **Ctrl** и **F** одновременно, введите
номер позиции или оригинальный номер, нажмите **Enter**.

Первые несколько раз поиск позиции может занять какое-то время, но впоследствии
процедура ускоряется - чем больше вы пользуетесь поиском, тем быстрее он работает.

Sales terms

Catalogue copyright:

HD-Parts Oy (HD) has copyright to its catalogue, leaflets and all product pages even if they were with customers own name or contact information. Any material supplied by HD is forbidden to be copied, saved or sent to any third party without authorization.

HD product suitability:

HD sells its products according to suitability information and only to those vehicles they are meant to. If customer buys products according to measurement or other information or installs the part to any other location it is originally meant, it is on their own responsibility.

Product pictures:

We try to use pictures of the exact products which we are currently selling. It is possible however that the items color, model or composition changes after the catalogue has been printed. At the moment the catalogue was printed, all products have not been available for photography. In these cases we have substituted the product picture with a symbol-picture which is usually marked also with text ”symbol”. These pictures are usually taken from some other similar product.

Catalogue errors:

The information in this catalogue has been compiled carefully by means of documentation and information available.
However, we do not accept any responsibility in case of errors or omissions. We ask you to report any found errors to us.

Product checking:

When packing shipments and individual products, we check all our products and packets. When receiving the parts, please check that it is correct and otherwise ok. If you have received a wrong part or if something is missing, please contact us immediately.

Liability of the installer:

Ask the installer to check before installation, that the part is correct, that it is in good working order, that it fits in the place intended for installation and that it is working inteded way. Don’t make any modifications to the part. Installer assumes all responsibility when installing unsuitable, broken or modified items or any item that does not function as intended.

OE manufacturer references are marked into our catalogue with SCR or VOR. Even when we are informing OE-references, they are sold as HD´s own parts and not as original equipment. The reference numbers are not to be mentioned to the final user as HD number.
The truck brands are mentioned only as suitability information.

All our parts are customs cleared to EU / Finland and are subject to EU-customs treatment.
Most kits are composed of parts from different countries so it would be impossible to keep track of all of their manufacturing countries.

By ordering HD replacement parts, you agree to above sales terms.

Условия продаж

Издательское право на каталог продукции:
Компания HD-Parts Oy (HD) полностью владеет издательскими правами каталога продукции, рекламных проспектов и других рекламных страниц, даже если на них напечатаны реквизиты клиента. Для третьей стороны категорически запрещено любое копирование, тиражирование и распространение материала HD в любой известной и неизвестной форме, без специального разрешения.

Совместимость деталей HD:
HD продаёт детали только по заявленной совместимости, и только к тем транспортным средствам, на которые они предназначены.
В случае покупки детали клиентом исключительно по её размерам или по другой информации, или при установки не по назначению, ответственность за деталь переходит полностью на покупателя.

Фотографии деталей:
В каталоге размещены фотографии нашей актуальной продукций. Цвет, модель или сборка комплекта иногда меняется в течении срока действия каталога. Сфотографировать все детали к моменту выхода каталога не было возможным, поэтому данные детали указаны картинками с текстом ”symbol”. Картинки ”symbol” взяты с других похожих деталей.

Ошибки в каталоге:
Информация в каталоге была тщательно составлена с помощью доступных информационных и документационных источников.
Тем не менее HD не несёт ответственности за возможные ошибки и неточности.
При обнаружении ошибки в каталоге, любезно просим сообщить нам об этом.

Проверка деталей:
Во время подготовки отдельных деталей к продаже, мы тщательно проверяем их. При получении заказа просим проверить пришли ли правильные детали, находятся ли они в полной целостности, работают ли они надлежащим образом и подходят ли к установке в назначенное место.

Ответственность механика:
Попросите пожалуйста механика удостоверится, что деталь правильная, полностью в порядке, подходит к установке и функционируют требуемым образом. Не делайте никаких изменений в детали. Механик несёт полную ответственность в случае установки неподходящей, неисправной, измененной или неработающей надлежащим образом детали.

Оригинальные номера производителя (OER) обозначены в нашем каталоге сокращениями SCR или VOR. Все наши детали продаются как HD- запчасти, они не являются оригинальными и не обозначены таковыми. Оригинальные номера, указанные в нашем каталоге и рекламных проспектах, используются исключительно в информативных целях, они не предназначены для конечного покупателя в виде номеров продукции HD. Марки транспортных средств указаны исключительно в информативных целях.

Вся продукция HD растаможена в ЕС / Финляндии и прошла все необходимые таможенные процедуры. Большинство компонентов ремкомплектов поставляются из разных стран мира, поэтому невозможно поддерживать полный список стран производителей.

Заказывая HD-детали Вы принимаете условия продаж HD-Parts Oy.

Myyntiehdot

Luettelon tekijänoikeus:

HD-Parts Oy:llä (HD) on tekijänoikeus tuoteluetteloonsa, tuotevihkoihinsa ja erilaisiin tuote-esitesivuihinsa, vaikka ne olisivatkin varustettu asiakkaan yhteystiedoilla. Mitään HD:n toimittamaa tuotemateriaalia ei saa kopioida tai tallentaa eikä saa toimittaa missään muodossa tai millään vielä tuntemattomalla tavalla kenellekkään kolmannelle osapuolelle ilman lupaa.

HD osien sopivuus:

HD myy osat vain sopivuuden mukaan ja vain niihin ajoneuvoihin mihin ne on todella tarkoitettu.
HD ei myy mitään osaa mittojen tai muiden tietojen mukaan johonkin toiseen ajoneuvoon tai johonkin muuhun tarkoitukseen.
Mikäli asiakas aikoo käyttää HD osaa muuhun kuin tarkoitettuun paikkaan, niin asiakas ottaa kaiken vastuun jo tilaamisvaiheesta lähtien.

Tuotekuvat:

Pyrimme kuvaamaan osat luetteloomme sellaisina kuin niitä toimitamme. On kuitenkin mahdollista, että osan väri, malli tai kokoonpano voi muuttua luettelon voimassaoloaikana. Luettelon painoonmenohetkellä myöskään kaikkia tuotteita ei ole ollut saatavilla kuvattavaksi. Näissä tapauksissa olemme korvanneet tuotekuvan ”symbol” tuotekuvalla joka useimmissa tapauksissa on merkitty tuotekuvassa Symbol tekstillä. Symbol tuotekuva on useimmiten kopioitu toisesta samankaltaisesta tuotteesta.

Luettelon virheet:

HD ei vastaa luettelossa olevista mahdollisista virheellisyyksistä tai puutteellisista tiedoista.
Pyydämme virheitä huomatessanne ilmoittamaan niistä meille.

Tuotteen tarkistus:

Kun pakkaamme yksittäisiä varaosia, tarkistamme ne. Kun vastaanotat lähetyksen, tarkista, että varaosat ovat oikein, moitteettomassa kunnossa, että ne toimivat tarkoitetulla tavalla ja soveltuvat asennettavaksi tarkoitettuun paikkaan.

Asentajan vastuu:

Pyydä mekaanikkoasi tarkistamaan, että osa on oikea, että se on kunnossa, soveltuu asentamiseen ja että se toimii suunnitellulla tavalla.
Älä tee muutoksia osaan. Asentaja ottaa kaiken vastuun asentaessaan sopimattomia, rikkoutuneita, muunnettuja osia tai sellaisia osia, jotka eivät toimi tarkoitetulla tavalla.

Alkuperäososien toimittajien viitenumeroista käytämme lyhennyksiä SCR tai VOR. HD:n varaosia ei myydä ajoneuvovalmistajien alkuperäisosana, vaan ne myydään HD:n omina varaosina ja HD:n omalla tuotenumerolla. Missä tahansa HD:n toiminnassa mainitut viitenumerot ovat vain viitteitä eikä niitä tule mainita missään lopulliselle kuluttajalle menevässä aineistossa HD tuotteen numerona.
Ajoneuvovalmistajien automerkit ovat mainittu vain tuotteen sopivuustiedoksi.

Kaikki HD-osat ovat tullattu EU:n / Suomen alueelle joten osat saavat sen jälkeen EU-tullikohtelun.
Ostamme samaa osaa eri maiden valmistajilta ja exporttereilta joten HD ei voi tietää mikä osa on mistäkin maasta kotoisin.

Tilaamalla HD-varaosia hyväksyt HD-myyntiehdot

HD - PARTS 2021

Guarantee terms

General terms:

HD-Parts Oy (hereinafter referred to as the seller) deals only with the warranty claims sent through the online warranty form. The reseller (hereinafter referred to as the customer) is responsible for filling the warranty claim. A warranty claim must be sent to the seller within one (1) month after the flaw or defect has been detected. Claims submitted with incomplete information or claims submitted after the warranty period is over will not be processed and will be returned to the customer with supplementary requests.

Warranty period:

According to EU legislation, the manufacturer is responsible for some possible warranty cases relating to their products, while the seller is acting as a dealer only. Warranty for the sold products is valid in accordance with terms and conditions of the manufacturer, which is at least one (1) year from delivery to the seller. The seller is following the manufacturer's terms by granting the customer at least one (1) year warranty starting from the date of sale.

According to the terms, the manufacturer is committed to fix, replace or credit the product, which has become unusable due to material or manufacturing defects. Such part and any other parts, accessories, liquids etc. in connection with the defect in question, shall, at the request of the seller, be delivered by the customer dismantled and complete within two (2) weeks after the request. In case they are not available from the customer, the manufacturer has the right to deny the claim.
The seller is entitled to charge all costs from the customer incurred from returning the parts if the claim is denied. If the parts are being returned in a way, that hasn't been accepted by the seller, the customer is responsible for covering all the costs for the return and they will not be credited by the seller in any occasion.

Responsibilities of the mechanic or installer:

The person who is installing the part is responsible for confirming that the product is meant for the position where it is going to be installed and it has no visible flaws or defects or incorrect dimensions.

Cases, which are not covered by the warranty:

Warranty does not cover those parts, labor and travel costs, flaws or defects, which are caused by external damage, insufficient maintenance, overloading, unsuitable lubrication or other liquids, natural wear, misuse or installation error.

The seller acts only as a dealer and the manufacturer makes all the decisions whether the claim will be credited or not. The manufacturer is also responsible for performing the crediting, therefore the seller is not obliged to credit any of the following costs possibly caused by material or manufacturing defects: parts costs, labor costs, accessory costs, travel costs, losses for resellers, losses for resellers customers.

Handling of the warranty claim:

The seller receives all the warranty claims and pre-processes them. If the case enables, the seller can make the decision on crediting or rejecting the warranty claim to avoid loss of time and money for the customer. If the seller decides to credit the claim, they will only credit the defected part without any additional costs and the decision can be based on a possible defect or another valid reason. As for any other compensation requests including the possible labor compensation claims, it is the manufacturer that makes the decision and they follow their warranty terms and conditions using the cost prices and standard times of the company that performed the labor.

If the seller informs the customer about the rejection of the warranty claim, the customer decides whether they wish to send the defected parts with relevant other parts and accessories to the manufacturer. If the customer wants to send these parts and accessories to the manufacturer, the customer must make a written commitment that they will cover all the costs related to the manufacturers' examination, if the parts appear not have the flaw or defect caused by material or manufacturing.

Warranty cases expire and the seller or the manufacturer has a right to dispose of the material in following situations:
- The customer is not willing to make a written commitment (see above) for covering the costs of the examination
- The customer does not insist on the seller forwarding the case to the manufacturer.
- The customer does not insist on the seller or the manufacturer returning the parts and accessories at the customer's cost within 30 days after the decision about the claim is made.

The manufacturer or the seller has the right to disassemble, break, take samples or otherwise handle parts and accessories related to the warranty case in any needed way to complete the examination. If the material used in examinations to solve the warranty case is insisted to be returned, they will be returned in the condition they are after the examination.

The ownership for the parts and accessories, which the customer has been credited based on the warranty claim, is transferred to the manufacturer or the seller and the parts and accessories in question are not returned to the customer. For the other possible parts and accessories, if they are being returned, the returning costs are always the customer's responsibility.

If the customer has not delivered the warranty claim or the demanded parts and accessories within the deadlines mentioned above, the warranty case expires and will not be processed.

The seller will handle all the communication towards the manufacturer or supplier unless the seller requires otherwise.

By ordering parts from the seller, the customer agrees to comply with the warranty terms mentioned above.

By submitting a warranty claim, the customer assures that they have read the warranty terms.

HD - PARTS

2021

Гарантийные условия

Общие условия:

HD-Parts Oy (далее в тексте продавец) принимает к рассмотрению рекламации отправленные только через электронную онлайн анкету. Дистрибьютор (далее в тексте покупатель) несет полную ответственность по заполнению рекламационной анкеты. Рекламация должна быть отправлена продавцу в течении одного (1) месяца с момента обнаружения неисправности или дефекта. Рекламации, отправленные с неполной информацией или отправленные после истечения гарантийного срока, не рассматриваются и возвращаются покупателю за дополнительной информацией.

Гарантийный срок:

По законодательству ЕС, производитель несёт полную ответственность за все возможные рекламационные случаи касающиеся его продукции, а продавец действуют только в роли дистрибьютора. Гарантия на проданную продукцию действует на основании гарантийных условий производителя, и составляет не менее одного (1) года с момента поставки товара продавцу. Продавец следует условиям производителя и предоставляет продукции, проданной клиенту, гарантию минимум один (1) год с момента продажи детали.

По условиям, производитель обязуется исправить, заменить или компенсировать стоимость детали, которую невозможно использовать по прямому назначению в связи с дефектами материала или конструкции. Любая другая деталь, аксессуар, жидкость и т.д., связанные с дефектом, должны быть по запросу продавца демонтированы и доставлены покупателем в изначальном виде в течении (2) двух недель с момента запроса.
При недоступности запрошенной детали, производитель имеет право отклонить поступившую рекламацию. При отклонении гарантийной рекламации продавец имеет право взымать компенсацию с покупателя за понесенные расходы при возврате детали. Если детали были возвращены способом, не согласованным с продавцом, покупатель отвечает за покрытие всех понесенных расходов, которые не компенсируются продавцом при любых обстоятельствах.

Ответственность механика или устанавливающего лица:

Лицо, которое производит установку детали, отвечает за установку детали на предназначнное ей место а также перед установкой обязуется проверить деталь на предмет видимых повреждений или дефектов и соответствие требуемым размерам.

Случаи, которые не покрываются гарантией:

Гарантия не покрывает части, работу, выездные расходы, дефекты, которые были вызваны внешними повреждениями, недостаточным техническим обслуживанием, недостаточной смазкой или недостатком другой жидкости, естественным износом, неправильным использованим, ошибкой при установке и тому подобным.

Продавец не обязан компенсировать ни один из следующих расходов, которые возможно были вызваны дефектом детали или производственным браком: стоимость деталей, стоимость работы, стоимость дополнительных расходов, выездные расходы, убытки продавца, убытки клиентов продавца.

Продавец действует только как дилер, производитель принимает все решения по рекламации. Производитель также несет ответственность за осуществление компенсации.

Обработка гарантийной рекламации:

Продавец получает все гарантийные рекламации и предварительно обрабатывает их. Если случай позволяет, продавец может принять решение о компенсации или об отклонении рекламации во избежание потери времени и денег покупателя. Все подобные решения принимаются на основании брака детали или другой актуальной причины, и компенсируют только бракованную часть без каких-либо дополнительных расходов. В случае всех других компенсаций, включая возможные расходы по работе, их принимает и обрабатывает только производитель в соответствии с его гарантийными условиями и правилами, они рассчитываются на основании себестоимости проведенных норма-часов, прописанных в уставе компании, проводившей установку детали.

Если продавец информирует покупателя об отказе в компенсации, за покупателем остается право отправить бракованные детали вместе с возможными сопутствующими частями или аксессуарами производителю. Если покупатель принимает решение отправить бракованную деталь и сопутствующие части производителю, он должен составить письменное поручительство в котором соглашается компенсировать все расходы, связанные с проведением экспертизы производителем, при условии, что экспертизой не будет выявлено в детали материального дефекта или производственного брака.

При истечении срока рассмотрения рекламации у продавца и у производителя есть право утилизировать материал при следующих условиях:

- Покупатель не желает составлять письменное поручительство (упоминается выше в тексте) по компенсации расходов экспертизы.
- Покупатель не настаивает на том, чтобы отправить деталь производителю.
- Покупатель на настаивает на том, чтобы продавец или производитель вернул деталь и аксессуары за счет покупателя в течении 30 дней с момента принятия решения по рекламации.

Для завершения экспертизы производитель или продавец имеют полное право совершать следующие действия с гарантийной деталью; разбирать, ломать, брать пробу или другим образом обрабатывать деталь и аксессуары. Если деталь, используемую в гарантийной экспертизе, требуется вернуть, то она возвращается в том виде и состоянии, в котором она была после завершения экспертизы.

Право собственности переходит от покупателя к производителю или продавцу на все те детали и аксессуары, на которые покупатель получил компенсацию по гарантийному случаю, детали также не подлежат возврату покупателю. Покупатель несёт полную ответственность за оплату возврата любых других возвращаемых частей или аксессуаров.

Если покупатель не доставляет рекламацию или поврежденные части в вышеуказанный срок, рекламация аннулируется и не рассматривается далее.

Продавец обязуется вести всю коммуникацию с производителем и поставщиком, если только продавец не укажет иначе.

Заказывая части у продавца, покупатель полностью соглашается с вышеуказанными гарантийными условиями.

Отправляя рекламацию, покупатель подтверждает, что ознакомился с гарантийными условиями.

HD - PARTS 2021

Takuuehdot

Yleiset vaatimukset:

HD-Parts Oy (jäljempänä myyjä) käsittelee takuuanomuksia vain sähköisen takuulomakkeen kautta lähetettynä. Takuuanomuksen täyttää tuotteen ostanut jälleenmyyjä (jäljempänä asiakas). Takuuanomus tulee toimittaa HD:lle viimeistään kuukauden kuluessa takuuviaksi oletetun vian havaitsemisesta. Vanhaa tai puutteellisin tiedoin toimitettua anomusta ei käsitellä, vaan se palautetaan asiakkaalle takaisin uusimis- tai täydennyspyynnön kanssa.

Takuuaika:

EU:n lainsäädännön mukaan osan mahdollisesta takuusta vastaa valmistaja myyjän toimiessa vain välittäjänä. Myydyille tavaroille on voimassa osan valmistajan ehtojen mukainen takuu, joka on vähintään yksi (1) vuosi osan toimittamisesta myyjälle. Myyjä seuraa takuuajoissaan valmistajan ehtoja myöntäessään asiakkaalle vähintään yhden (1) vuoden takuun myyntipäivämäärästä laskettuna.

Ehtojen mukaan valmistaja sitoutuu korjaamaan vaurioituneen osan, antamaan uuden osan vaurioituneen tilalle tai hyvittämään osan joka on aine- tai valmistusvian takia tullut käyttökelvottomaksi. Tällainen osa ja sen vaurioitumisen yhteydessä olevat muut osat, tarvikkeet, nesteet jne., on myyjän pyytäessä toimitettava viimeistään kahden (2) viikon sisällä pyynnöstä purkamattomana ja täydellisenä myyjälle. Mikäli ne eivät olisi tarvittaessa saatavilla, on valmistajalla mahdollisuus evätä takuu. Myyjän maksaessa palautuskustannukset on myyjällä oikeus veloittaa kaikki aiheutuneet kustannukset asiakkaalta takuun hylkääntyessä. Palautuksen tapahtuessa muulla kuin myyjän hyväksymällä kuljetusmuodolla, on asiakas velvollinen maksamaan palautuskustannukset, joita ei korvata missään vaiheessa.

Asentajan tai asennuttajan vastuut:

Viime kädessä osan asentaja tai asennuttaja on vastuussa siitä, että osa sopii tarkoitettuun paikkaan asennettavaksi ja osa ei sisällä ulkoisesti havaittavaa vikaa tai väärää mittaa, eikä siitä syystä ole kelvollinen asennettavaksi.

Takuun piiriin kuulumattomat asiat:

Takuuseen eivät sisälly ne osat, asennustyöt, matkakulut eivätkä sellaiset vahingot ja viat, jotka ovat aiheutuneet ulkoisesta vahingosta, huonosta ylläpidosta, ylikuormituksesta, sopimattomista voiteluaineista tai muista käytetyistä nesteistä, luonnollisesta kulumisesta, käyttövirheestä, asennusvirheestä tai muista valvonnan ulkopuolella olevista syistä.

Myyjä ei ole velvollinen korvaamaan mitään osia, asennustöitä, tarvikekuluja, matkakuluja ym. kuluja sekä välillisiä tai välittömiä tappioita, joita aine- ja valmistusviat ovat mahdollisesti aiheuttaneet jälleenmyyjille tai heidän asiakkailleen. Kaikista mahdollisista takuukorvauksista on vastuussa osan valmistaja joka myös päättää mahdollisista takuukorvauksista myyjän toimiessa vain asioiden välittäjänä.

Takuuanomuksen käsittely:

Myyjä vastaanottaa ja esikäsittelee kaikki takuuanomukset. Myyjä voi halutessaan, asiakasta palvellakseen ja kuluja säästääkseen tehdä takuuanomuksen perusteella hyvitys- tai hylkäämispäätöksen. Mahdollisissa hyvityspäätöksissään, joka voi perustua ns. takuuvikaan tai mihinkä tahansa muuhun syyhyn, myyjä korvaa vain kyseisen osan ilman mitään lisäkuluja. Mahdollisista muista korvauspyynnöistä päättää aina valmistaja. Valmistaja käsittelee mahdollisia työkorvausvaatimuksia aina takuuehtojensa mukaisesti, työn tehneen yhtiön omakustannushinnoin ja maksimi aikamääriltään käytössä olevien ohjetyöaikojen mukaisesti.

Myyjän ilmoittaessa takuun hylkäämisestä jää asiakkaalle päätösvalta siitä, että lähetetäänkö vaurioituneet osat ja mahdollisesti asiaan liittyvät muut osat ja aineet käsiteltäväksi eteenpäin valmistajalle tai sille yhtiölle jolta myyjä on osat hankkinut edelleen toimitettavaksi valmistajalle. Jos asiakas haluaa osat ja aineet valmistajan käsiteltäväksi tulee asiakkaan sitoutua kirjallisesti korvaamaan takuukäsittelystä aiheutuvat kaikki kulut, mikäli kysymyksessä ei ole takuuvika.

Jos asiakas, myyjän ilmoittaessa takuun epäämisestä, ei ole valmis kirjallisestisitoutumaan korvaamaan takuututkimuksesta aiheutuneita kuluja eikä myöskään vaadi myyjää toimittamaan takuuasiaa valmistajan käsiteltäväksi eikä pyydä mahdollisesti myyjälle takuukäsittelyyn toimittamiaan materiaaleja palautettavaksi omallakustannuksellaan 30 kalenteripäivän sisällä siitä kun sai epäämispäätöksen tietoonsa, niin mahdollinen takuuasia raukeaa ja myyjällä on oikeus hävittää materiaali.

Jos asiakas, valmistajan evätessä takuun tutkittuaan asian, ei pyydä myyjältä materiaaleja palautettavaksi omalla kustannuksellaan 30 kalenteripäivän sisällä siitä, kun sai epäämispäätöksen tietoonsa, niin mahdollinen takuuasia raukeaa ja valmistajalla on oikeus hävittää materiaali.

Valmistajalla tai myyjällä on oikeus purkaa, rikkoa, ottaa näytteitä tai käsitellä muuten haluamallaan tavalla takuukäsittelyyn toimitettua materiaalia. Mahdollisesti palauttamaan vaadittu materiaali toimitetaan aina siinä kunnossa kuin se on takuututkimuksen jälkeen.

Valmistajalle tai myyjälle siirtyy omistusoikeus kaikkiin niihin osiin, tarvikkeisiin ja aineisiin mistä asiakas on saanut korvauksen anomuksen perusteella eikä niitä palauteta asiakkaalle. Muille osille mahdollinen palautus asiakkaalle tapahtuu aina asiakkaan kustannuksella yllämainittujen ehtojen mukaisesti.

Jos asiakas ei ole toimittanut takuuanomusta ja pyydettyjä osia määräajassa takuu raukeaa eikä sitä enää käsitellä.

Kaikki yhteydenpito valmistajaan tai siihen keneltä myyjä on hankkinut osat tapahtuu myyjän välityksellä ellei myyjä edellytä muuta.

Tilaamalla myyjän osia asiakas sitoutuu samalla noudattamaan yllämainittuja takuuehtoja. Lähettämällä takuuanomuksen myyjälle asiakas vakuuttaa tutustuneensa takuuehtoihin.

HEAVY DUTY

HD - PARTS 2017

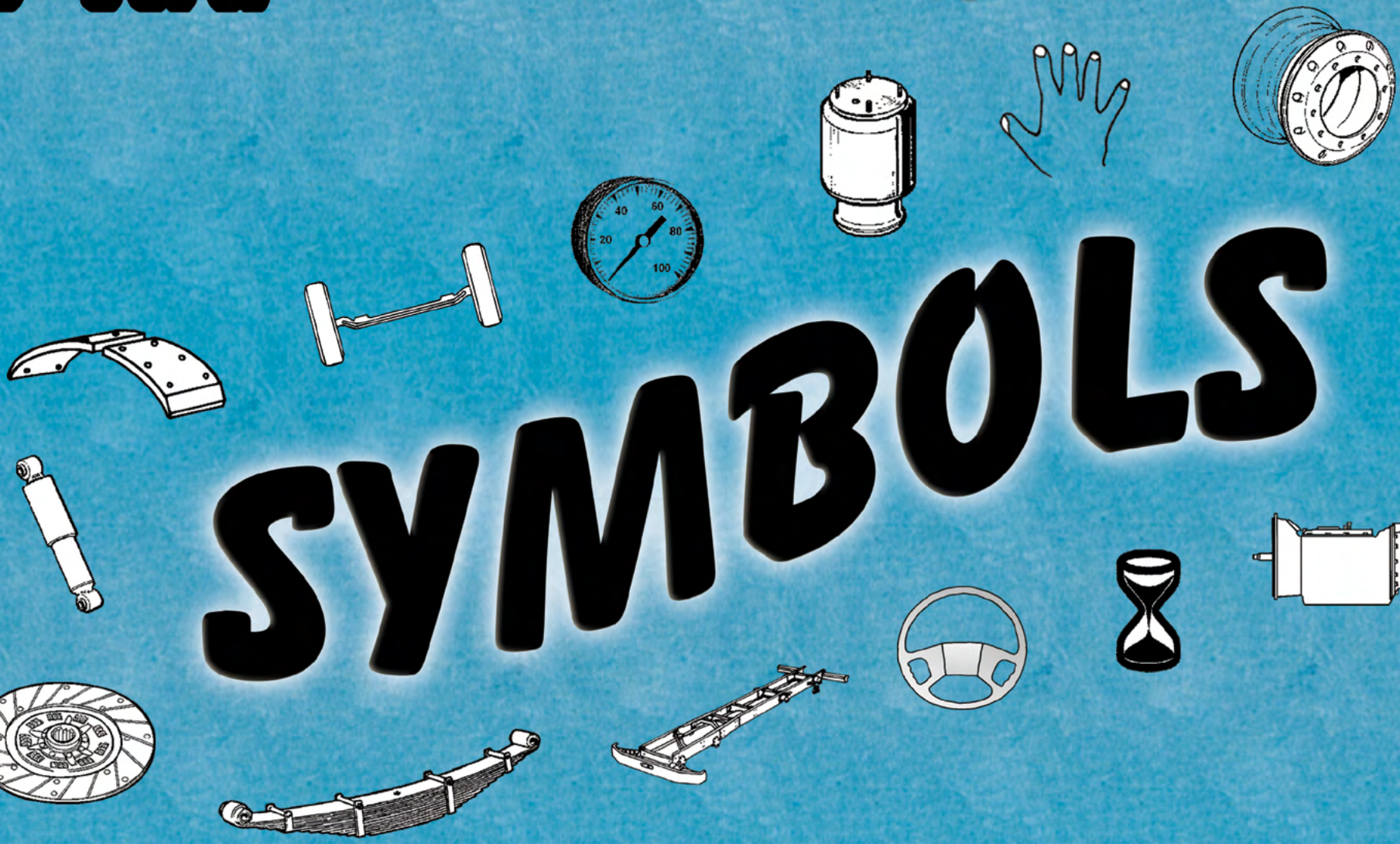

SYMBOLS

SYMBOL			
2021	Päivämäärä tai vuosi (Sivun versio)	Date or year (Version of the page)	Дата или год (Версия страницы)
1 2 3	Osasto	Section	Раздел
	Sivunumero	Page number	Номер страницы
OER ScR VoR	Alkuperäisviitenumero	Original reference number	Ссылка оригинального номера
HD	HD:n oma viitenumero	HD`s own reference number	HD свой номер ссылки
	Kuva tuotteen toiselta puolelta	Photo from the other side of the product	Фотография с другой стороны детали
	Ei ole tuotevalikoimassamme	Not in our product selection	Данной части нет в нашей программе.
	Vasen	Left	Левый
	Oikea	Right	Правый
M 12 x 1,5	Kierteen mitat	Thread measurements	Размеры резьбы
kg	Paino	Weight	Вес
	Negatiivi (Esimerkki: Ei sovi tämän symbolin yhteydessä mainittavaan kohteeseen)	Negative (Example: Is not suitable with something that is mentioned with this symbol)	Знак непригодности (Например: деталь не подходит при наличи данного символа)

SYMBOL			
	Alustan tyyppi tai numero	Chassis type or number	Номер или тип шасси
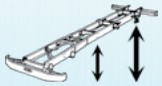	Alustan korkeus	Chassis height	Высота шасси
	Etuakseli	Front axle	Передний мост
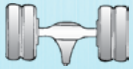	Taka - akseli	Rear axle	Задний мост
	4 - pistejousitettu ohjaamo	4 - point cabin suspension	Подвеска кабины, 4-х точечная
	2 - pistejousitettu ohjaamo	2 - point cabin suspension	Подвеска кабины, 2-х точечная
	Raideväli	Track	Колея
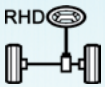	Ohjaus oikealla puolella	Steering on the right side	Правостороннее расположение руля
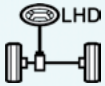	Ohjaus vasemmalla puolella	Steering on the left side	Левостороннее расположение руля
	Jakelu kuorma-auto	Distribution truck	
	Pitkän matkan rekka	Long distance truck	
	Rakennustyömaa kuorma-auto	Construction truck	

Wheel configuration

HEAVY DUTY HD - PARTS

Конфигурации колес

01 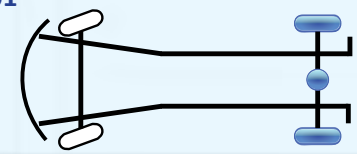 4 x 2	02 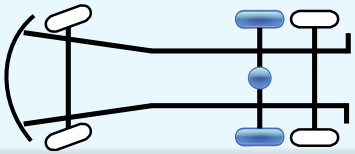 6 x 2	03 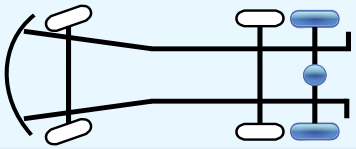 6x2/2	04 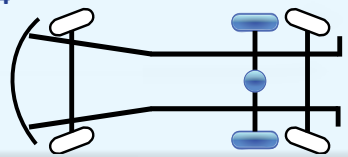 6x2*4
05 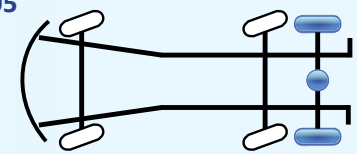 6x2/4	06 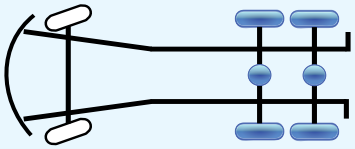 6 x 4	07 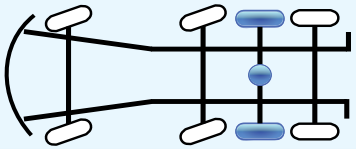 8x2/4	08 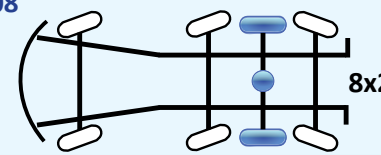 8x2/*6
09 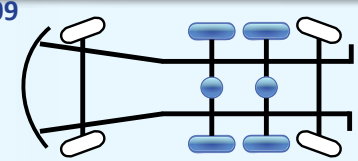 8x4*4	10 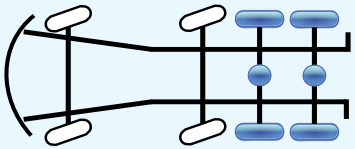 8x4/4	11 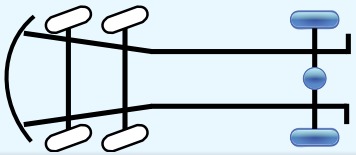 8x2-2	12 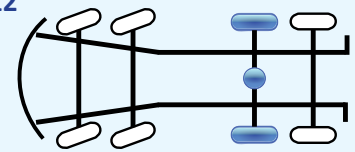 8 x 2
13 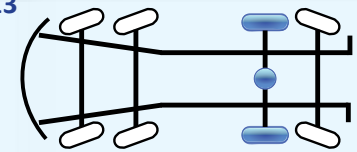 8x2*6	14 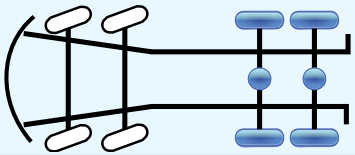 8 x 4	15 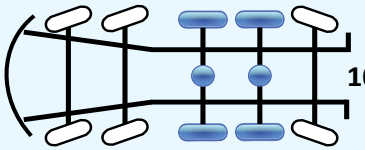 10x4*6	16 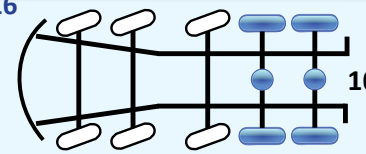 10x4/6
17 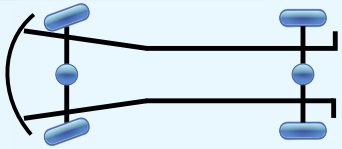 4 x 4	18 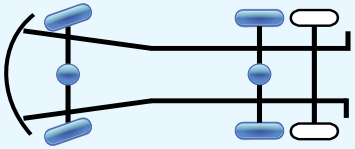 4x4+2	19 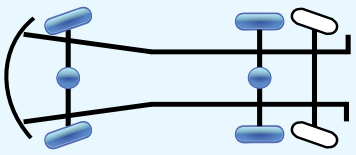 6x4*4	20 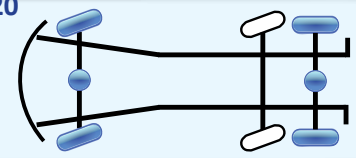 6x4/4
21 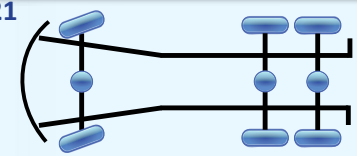 6 x 6	22 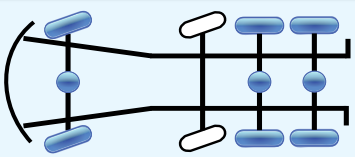 8x6/4	23 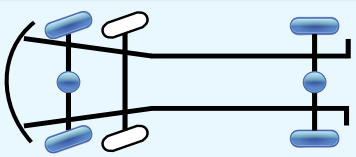 8x4-2	24 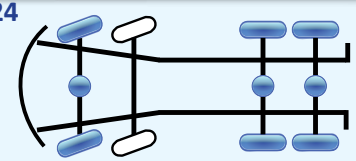 8 x 6
25 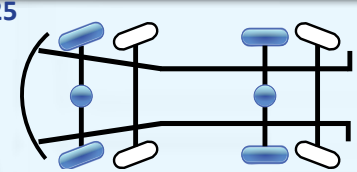 8x4*6	26 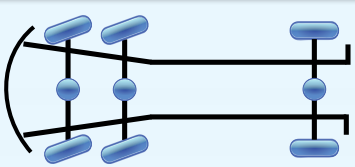 8x8-2	27 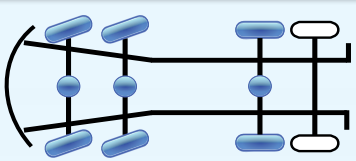 8x6+2	28 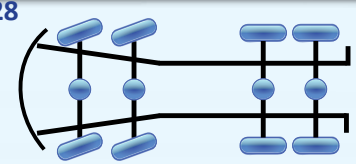 8 x 8

© 2020 HD-Parts Oy

Wheel configuration

HEAVY DUTY HD - PARTS

Конфигурации колес

01 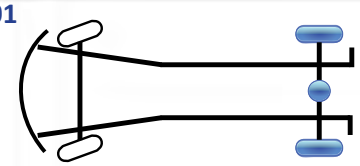 4 x 2	- Front axle - Driving rear axle	- Etuakseli - Vetävä taka-akseli	- Передняя ось - Ведущая задняя ось
02 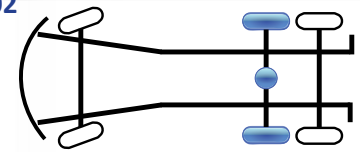 6 x 2	- Front axle - Driving rear axle - Non steered tag axle	- Etuakseli - Vetävä taka-akseli - Ei ohjattava teliakseli	- Передняя ось - Ведущая задняя ось - Неуправляемая подъёмная ось
03 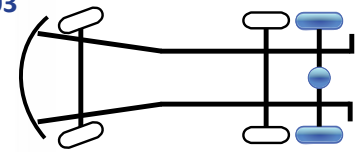 6x2/2	- Front axle - Non steered tag axle - Driving rear axle	- Etuakseli - Ei ohjattava teliakseli - Vetävä taka-akseli	- Передняя ось - Неуправляемая подъёмная ось - Ведущая задняя ось
04 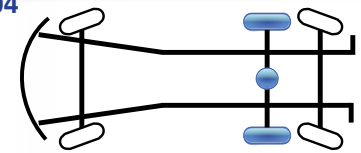 6x2*4	- Front axle - Driving rear axle - Steered tag axle	- Etuakseli - Vetävä taka-akseli - Ohjattava teliakseli	- Передняя ось - Ведущая задняя ось - Управляемая подъёмная ось
05 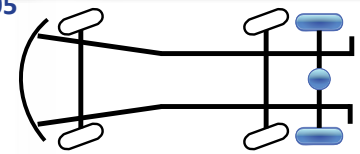 6x2/4	- Front axle - Steered tag axle - Driving rear axle	- Etuakseli - Ohjattava teliakseli - Vetävä taka-akseli	- Передняя ось - Управляемая подъёмная ось - Ведущая задняя ось
06 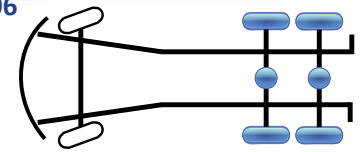 6 x 4	- Front axle - 1. driving rear axle - 2. driving rear axle	- Etuakseli - 1. vetävä taka-akseli - 2. vetävä taka-akseli	- Передняя ось - 1. ведущая задняя ось - 2. ведущая задняя ось
07 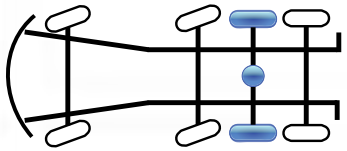 8x2/4	- Front axle - Steered tag axle - Driving rear axle - Non steered tag axle	- Etuakseli - Ohjattava teliakseli - Vetävä taka-akseli - Ei ohjattava teliakseli	- Передняя ось - Управляемая подъёмная ось - Ведущая задняя ось - Неуправляемая подъёмная ось

© 2020 HD-Parts Oy

Wheel configuration

HEAVY DUTY HD - PARTS

Конфигурации колес

08 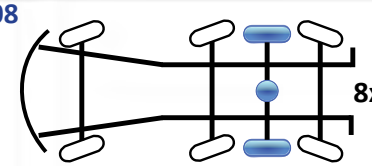 8x2/*6	- Front axle - Steered tag axle - Driving rear axle - Steered tag axle	- Etuakseli - Ohjattava teliakseli - Vetävä taka-akseli - Ohjattava teliakseli	- Передняя ось - Управляемая подъёмная ось - Ведущая задняя ось - Управляемая подъёмная ось
09 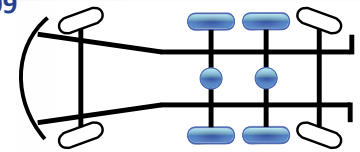 8x4*4	- Front axle - 1. driving rear axle - 2. driving rear axle - Steered tag axle	- Etuakseli - 1. vetävä taka-akseli - 2. vetävä taka-akseli- - Ohjattava teliakseli	- Передняя ось - 1. ведущая задняя ось - 2. ведущая задняя ось - Управляемая подъёмная ось
10 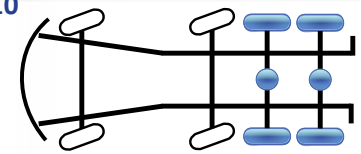 8x4/4	- Front axle - Steered tag axle - 1. driving rear axle - 2. driving rear axle	- Etuakseli - Ohjattava teliakseli - 1. vetävä taka-akseli - 2. vetävä taka-akseli	- Передняя ось - Управляемая подъёмная ось - 1. ведущая задняя ось - 2. ведущая задняя ось
11 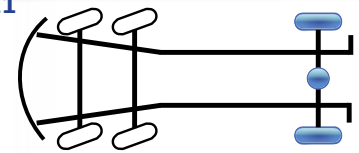 8x2-2	- 1. front axle - 2. front axle - Driving rear axle	- 1. etuakseli - 2. etuakseli - Vetävä taka-akseli	- 1. передняя ось - 2. передняя ось - Ведущая задняя ось
12 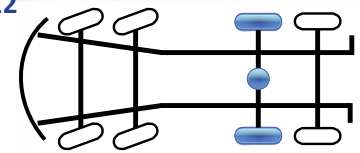 8 x 2	- 1. front axle - 2. front axle - Driving rear axle - Non steered tag axle	- 1. etuakseli - 2. etuakseli - Vetävä taka-akseli - Ei ohjattava teliakseli	- 1. передняя ось - 2. передняя ось - Ведущая задняя ось - Неуправляемая подъёмная ось
13 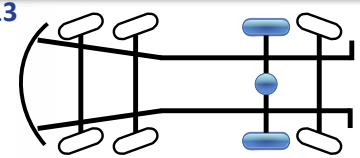 8x2*6	- 1. front axle - 2. front axle - Driving rear axle - Steered tag axle	- 1. etuakseli - 2. etuakseli - Vetävä taka-akseli - Ohjattava teliakseli	- 1. передняя ось - 2. передняя ось - Ведущая задняя ось - Управляемая подъёмная ось
14 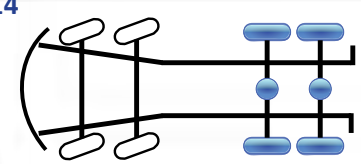 8 x 4	- 1. front axle - 2. front axle - 1. driving rear axle - 2. driving rear axle	- 1. etuakseli - 2. etuakseli - 1. vetävä taka-akseli - 2. vetävä taka-akseli	- 1. передняя ось - 2. передняя ось - 1. ведущая задняя ось - 2. ведущая задняя ось

© 2020 HD-Parts Oy

Wheel configuration

HEAVY DUTY HD - PARTS

Конфигурации колес

15 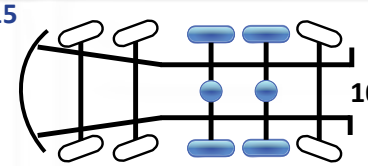 10x4*6	- 1. front axle - 2. front axle - 1. driving rear axle - 2. driving rear axle - Steered tag axle	- 1. etuakseli - 2. etuakseli - 1. vetävä taka-akseli - 2. vetävä taka-akseli - Ohjattava teliakseli	- 1. передняя ось - 2. передняя ось - 1. ведущая задняя ось - 2. ведущая задняя ось - Управляемая подъёмная ось
16 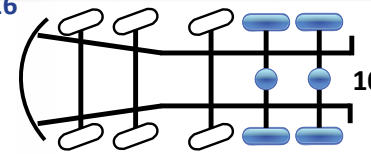 10x4/6	- 1. front axle - 2. front axle - Steered tag axle - 1. driving rear axle - 2. driving rear axle	- 1. etuakseli - 2. etuakseli - Ohjattava teliakseli - 1. vetävä taka-akseli - 2. vetävä taka-akseli	- 1. передняя ось - 2. передняя ось - Управляемая подъёмная ось - 1. ведущая задняя ось - 2. ведущая задняя ось
17 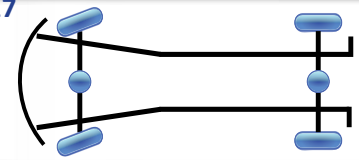 4 x 4	- Driving front axle - Driving rear axle	- Vetävä etuakseli - Vetävä taka-akseli	- Ведущая передняя ось - Ведущая задняя ось
18 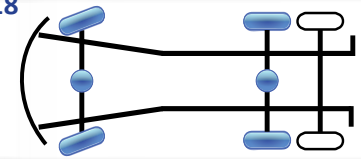 4x4+2	- Driving front axle - Driving rear axle - Non steered tag axle	- Vetävä etuakseli - Vetävä taka-akseli - Ei ohjattava teliakseli	- Ведущая передняя ось - Ведущая задняя ось - Неуправляемая подъёмная ось
19 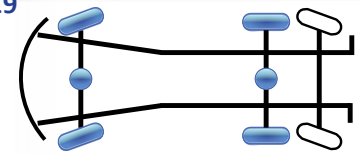 6x4*4	- Driving front axle - Driving rear axle - Steered tag axle	- Vetävä etuakseli - Vetävä taka-akseli - Ohjattava teliakseli	- Ведущая передняя ось - Вещудая задняя ось - Управляемая подъёмная ось
20 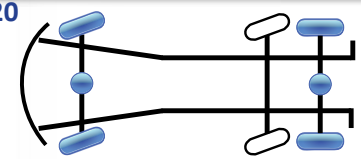 6x4/4	- Driving front axle - Steered tag axle - Driving rear axle	- Vetävä etuakseli - Ohjattava teliakseli - Vetävä taka-akseli	- Ведущая передняя ось - Управляемая подъёмная ось - Ведущая задняя ось
21 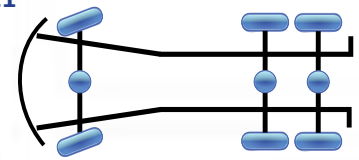 6 x 6	- Driving front axle - 1. driving rear axle - 2. driving rear axle	- Vetävä etuakseli - 1. vetävä taka-akseli - 2. vetävä taka-akseli	- Ведущая передняя ось - 1. ведущая задняя ось - 2. ведущая задняя ось

© 2020 HD-Parts Oy

Wheel configuration

HEAVY DUTY HD - PARTS

Конфигурации колес

22 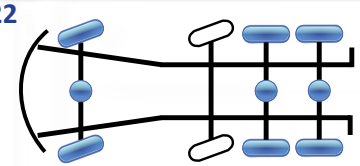 8x6/4	- Driving front axle - Steered tag axle - 1. driving rear axle - 2. driving rear axle	- Vetävä etuakseli - Ohjattava teliakseli - 1. vetävä taka-akseli - 2. vetävä taka-akseli	- Ведущая передняя ось - Управляемая подъёмная ось - 1. ведущая задняя ось - 2. ведущая задняя ось
23 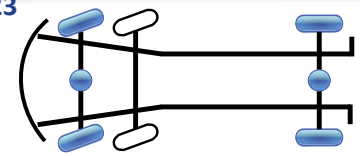 8x4-2	- 1. driving front axle - 2. front axle - Driving rear axle	- 1. vetävä etuakseli - 2. etuakseli - Vetävä taka-akseli	- 1. ведущая передняя ось - 2. передняя ось - Ведущая задняя ось
24 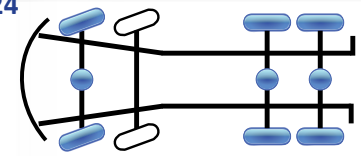 8 x 6	- 1. driving front axle - 2. front axle - 1. driving rear axle - 2. driving rear axle	- 1. vetävä etuakseli - 2. etuakseli - 1. vetävä taka-akseli - 2. vetävä taka-akseli	- 1. ведущая передняя ось - 2. передняя ось - 1. ведущая задняя ось - 2. ведущая задняя ось
25 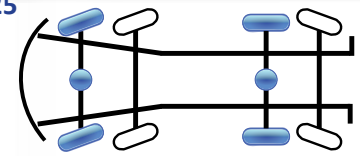 8x4*6	- 1. driving front axle - 2. front axle - Driving rear axle - Steered tag axle	- 1. vetävä etuakseli - 2. etuakseli - Vetävä taka-akseli - Ohjattava teliakseli	- 1. ведущая передняя ось - 2. передняя ось - Ведущая задняя ось - Управляемая подъёмная ось
26 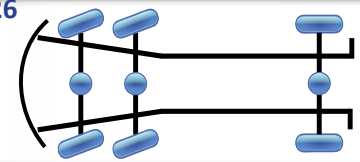 8x8-2	- 1. driving front axle - 2. driving front axle - Driving rear axle	- 1. vetävä etuakseli - 2. vetävä etuakseli - Vetävä taka-akseli	- 1. ведущая передняя ось - 2. ведущая передняя ось - Ведущая задняя ось
27 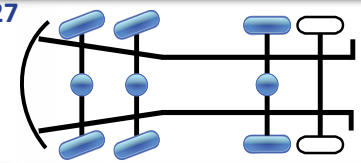 8x6+2	- 1. driving front axle - 2. driving front axle - Driving rear axle - Non steered tag axle	- 1. vetävä etuakseli - 2. vetävä etuakseli - Vetävä taka-akseli - Ei ohjattava teliakseli	- 1. ведущая передняя ось - 2. ведущая передняя ось - Ведущая задняя ось - Неуправляемая подъёмная ось
28 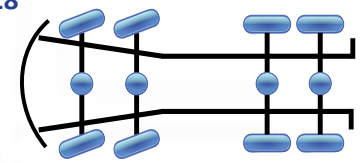 8 x 8	- 1. driving front axle - 2. driving front axle - 1. driving rear axle - 2. driving rear axle	- 1. vetävä etuakseli - 2. vetävä etuakseli - 1. vetävä taka-akseli - 2. vetävä taka-akseli	- 1. ведущая передняя ось - 2. ведущая передняя ось - 1. ведущая задняя ось - 2. ведущая задняя ось

© 2020 HD-Parts Oy

301010

Oil pressure sensor

ScR

1862892
1535521
1471744
1457306



kg 0,31

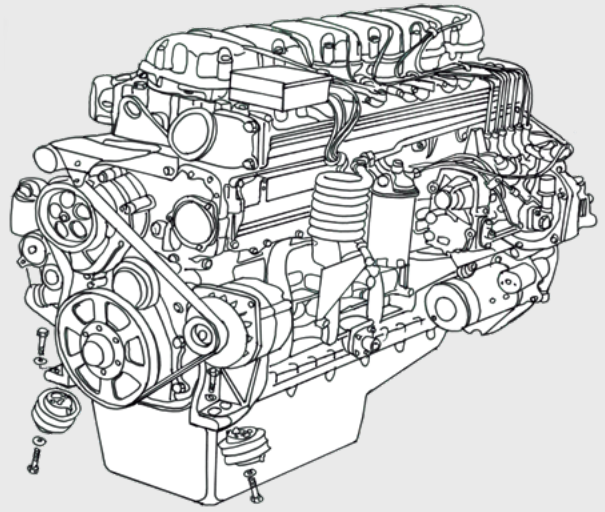

T5 Oil pressure sensor

LPGRS	OC09, OC13	08/2016 →
GPR	9, 12, 13, 16	04/2004 - 2018
94 - 164	9, 11, 12, 16 +DT12	06/1995 - 12/2004

KN	9, 13	+DT12
94, 114, 124	9, 11, 12	

O-ring FPM Viton (Included)
ScR 393187
11,3 x 2,4 x 16,1 mm

301000

Rotational speed sensor kit

ScR **1457304**

Length: 1,9 m





kg 0,28

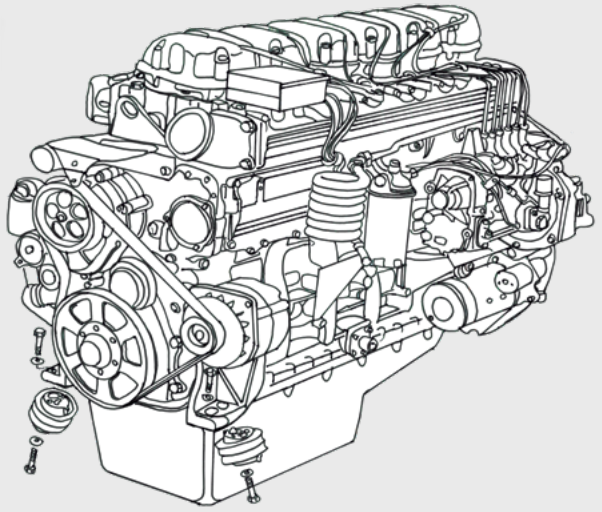

T75 Rotational speed sensor

LPGRS	9, 13	PDE-XPI 08/2016→
GPR	9, 11, 12, 13	PDE-HPI-XPI
94 - 124		PDE

KN	9, 13	TD 12
94	9	

Is used with HD 301001 (T74)

Compare difference →

301001

Rotational speed sensor kit

ScR **1457303**

Length: 1,7 m



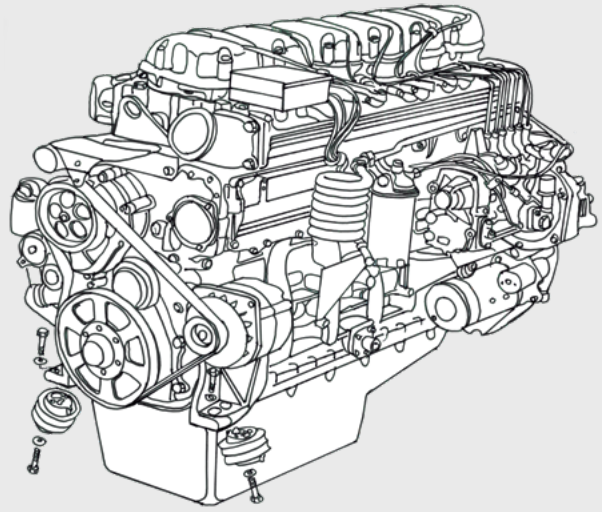



kg 0,25

T74 Rotational speed sensor

GPR	9, 11, 12, 13	PDE-HPI-XPI
94 - 124		PDE

KN	9, 13	TD 12
94	9	

Is used with HD 301000 (T75)

← Compare difference

301020

Sensor kit → Engine temperature

ScR

1865317
1788333



kg 0,22

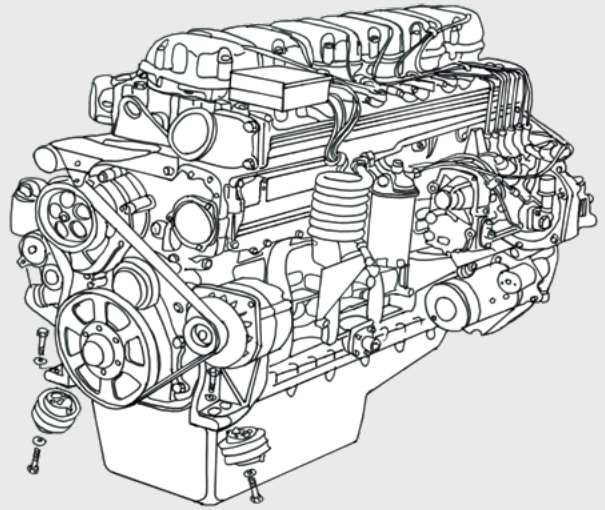

T33

R	16	04/2004 - 2018
94 - 164	-	06/1995 - 12/2004

301030

Charge air pressure sensor

ScR

2149696
1862890
1787155
1535520



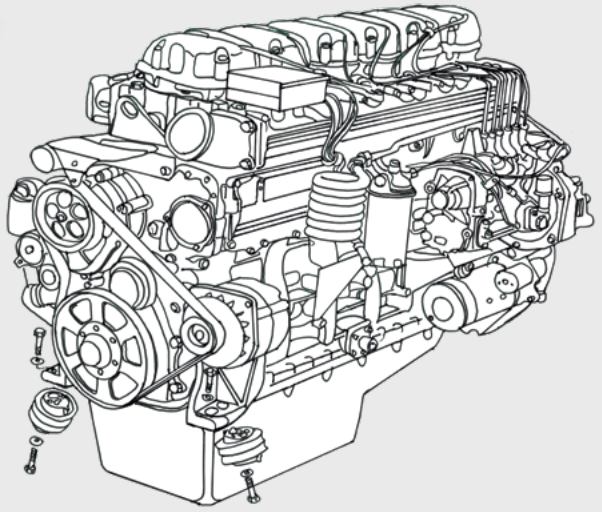

T47 Engine charge air pressure sensor

GPR	9, 12, 13, 16	
94 - 164	9, 11, 12, 16	+DT12

KN	9, 13	+DT12
94, 114, 124	9, 11, 12	

O-ring FPM Viton (Included)
ScR 393187
11,3 x 2,4 x 16,1 mm

kg 0,29

301204

Oil cooler → 16 engine

ScR 1945965

Material: Steel

8 - layer

439 x 160 x 46 mm

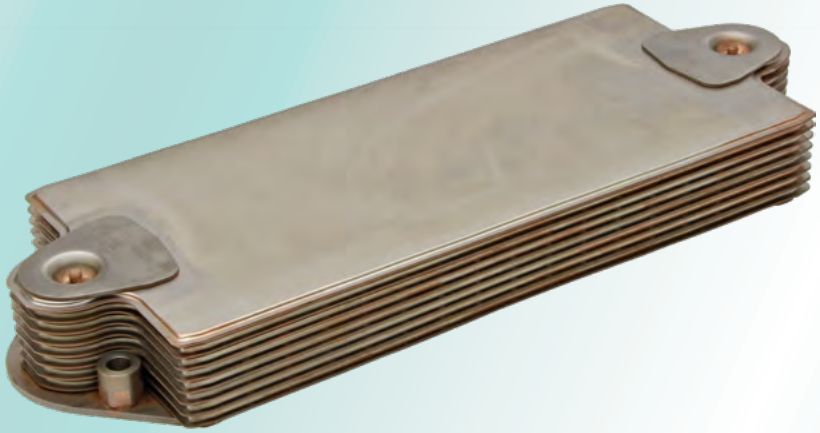

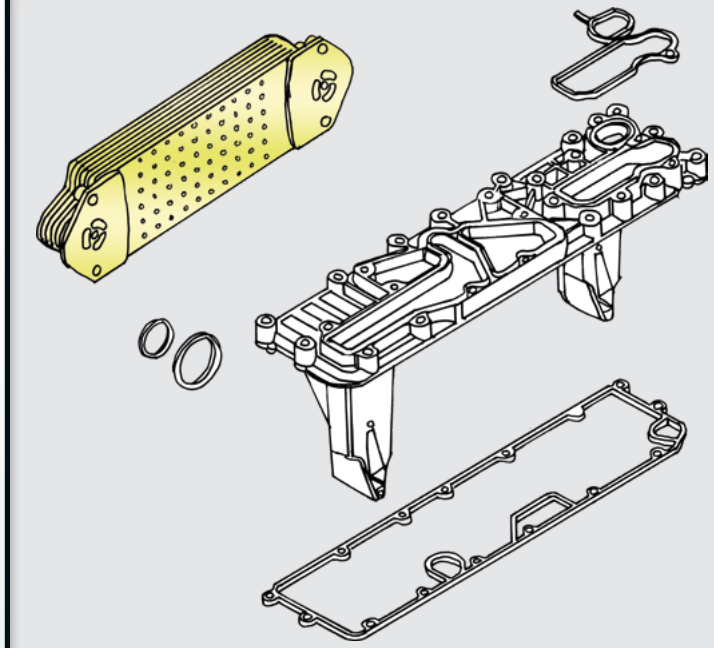

ScR 1484766

NBR NBR

Oval rings
Овальные кольца

ScR 1484765

FPM FPM

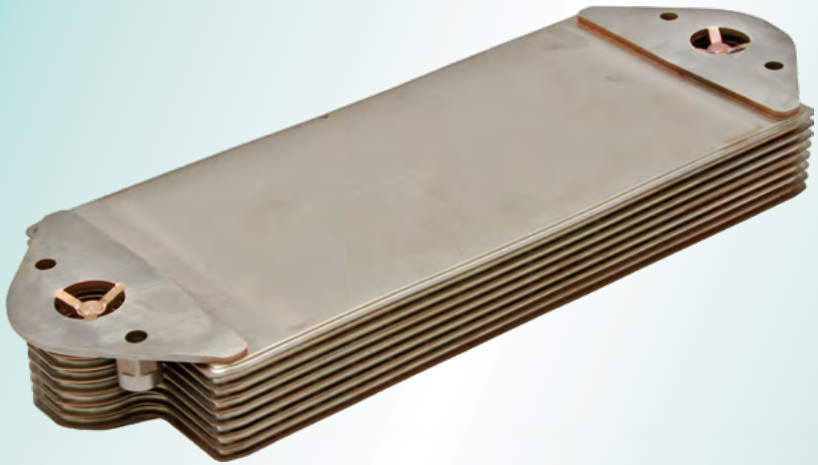

kg 6,35

RS	16	08/2016 →	2+3 generation
R	16	10/2010 - 2018	2. generation

301202

Oil cooler

ScR

1448933
1900032
1333183
1400861
1543688

Material: Stainless steel
Layers: 8 pcs

Width: 120 mm
Length: 394 mm
Thickness: 50,7 mm

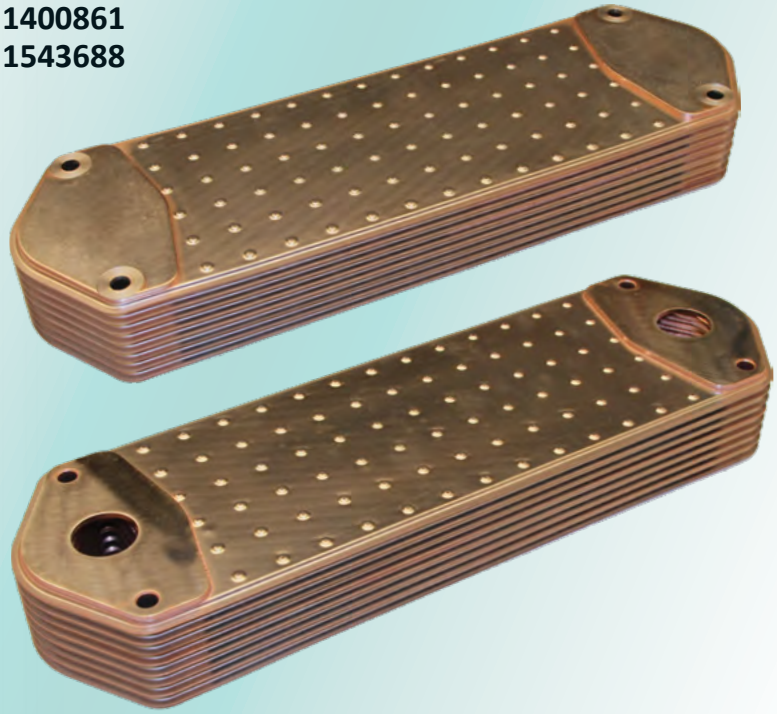



OE oil cooler thickness is 53,2 mm
HD oil cooler thickness is 50,7 mm

With OE cooler you need special screws with very low head (4 pcs ScR 2049326)

With HD cooler you don´t need special screws because of thinner mounting points. Screws are included in package.

kg 6,10

Suitable with cover: HD 301214

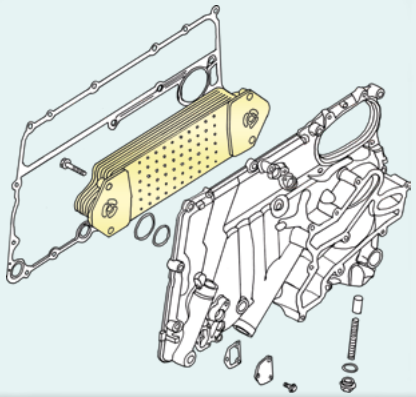

GPRS	9, 13	08/2016→	
GPR	9, 13	10/2010 - 2018	2. generation
KN	9, 13	10/2010→	2. generation

Suitable with cover: HD 301212

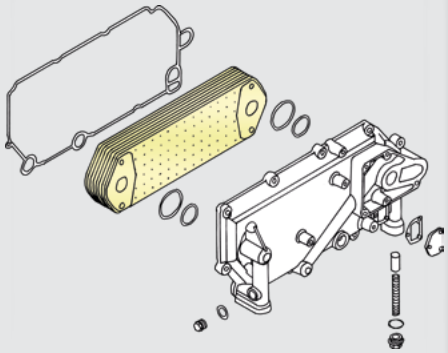

GPR	9, 11, 12	04/2004 - 10/2010	1. generation
114 - 164	11, 12	06/1995 - 12/2004	
KN	9, 11, 12	11/2005 - 10/2010	1. generation
114, 124	11, 12	10/1997 - 11/2006	

Suitable with cover:
ScR 1919690
1850702

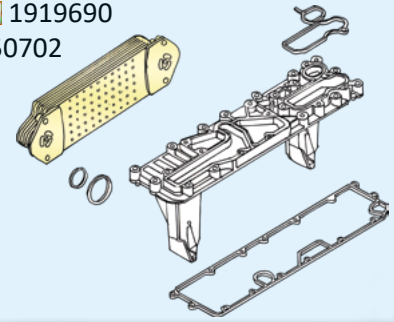

R	16	04/2004 - 10/2010	1. generation
164	16	05/2000 - 12/2004	

301214

Cover → oil cooler

ScR

2175675
1907734
2519503
2001484
1874697

Material:
Aluminium

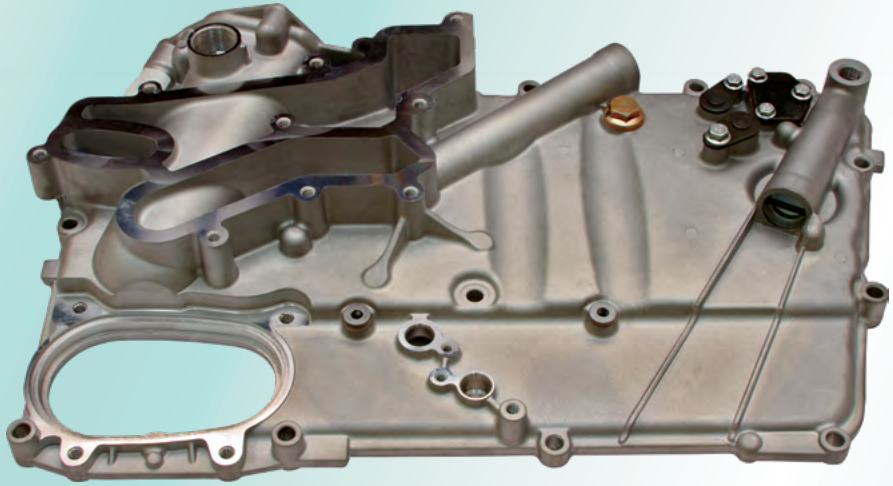

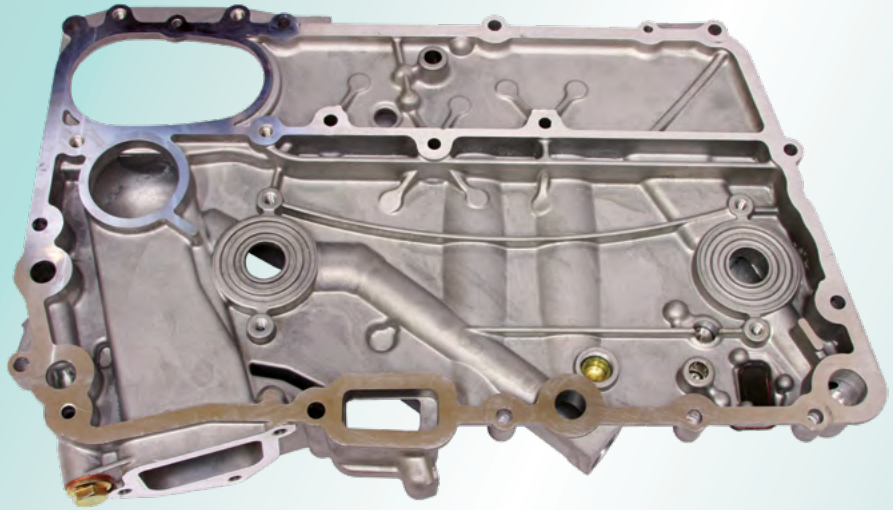

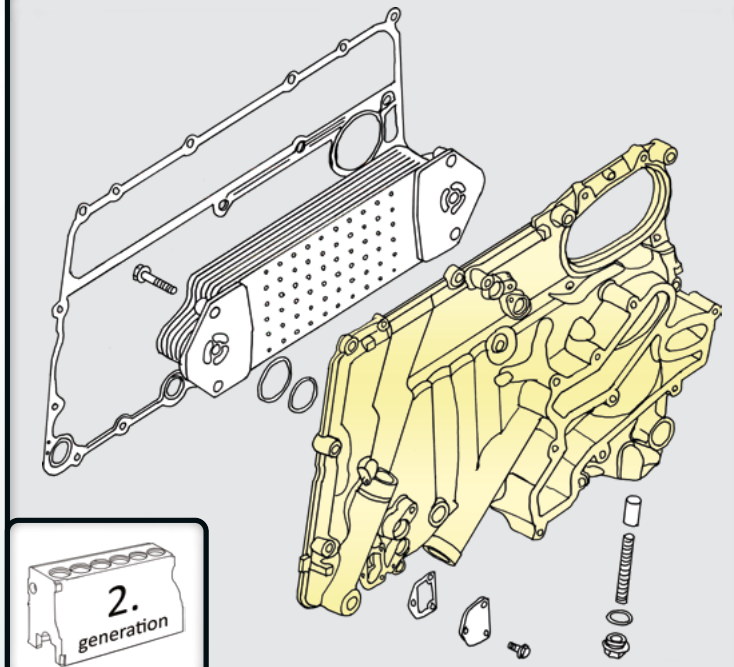

GPR	10/2010 - 2018	9, 13
KN	10/2010→	9, 13

kg 6,46

Suitable cooler:
HD 301202
ScR 1448933

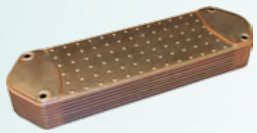

Suitable kit:
HD 301233
ScR 2096561

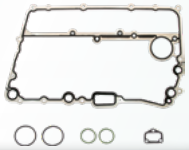

Suitable thermostat:
HD 302170
ScR 2475974

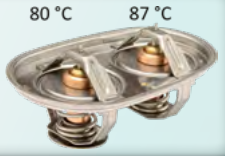

Suitable thermostat:
HD 302172
ScR 2475976



301212

Cover → oil cooler

ScR

2010938
1795526
1774202

Material:
Aluminium
Алюминий

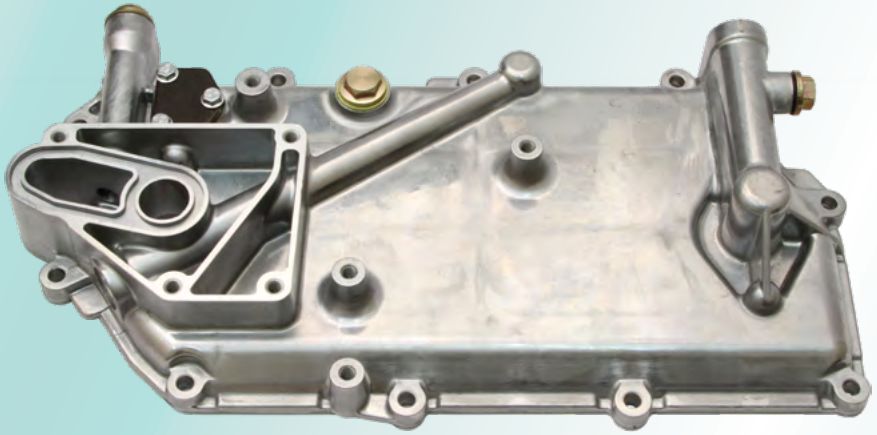

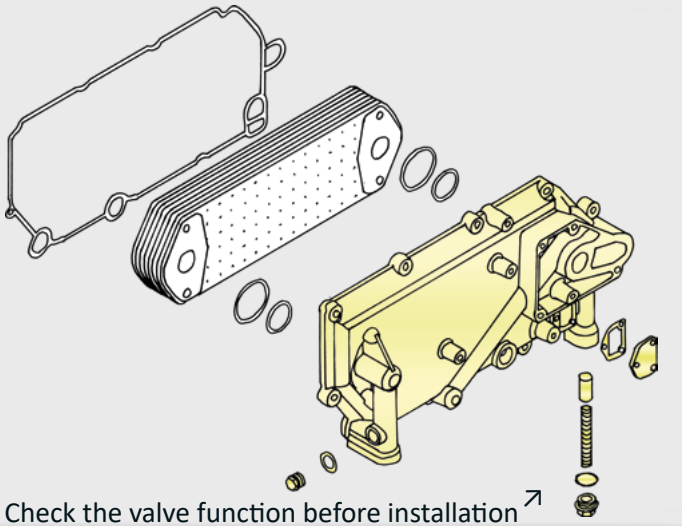

Check the valve function before installation ↗

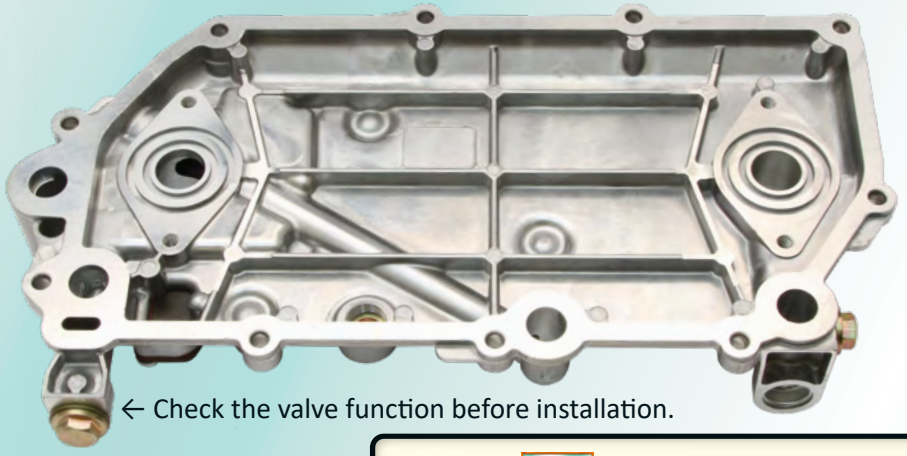

← Check the valve function before installation.

kg 2,96

Old covers ScR 1774202 + 1795526 have been replaced by:

HD 301212 cover
HD 301232 kit

ScR 2010938 +
ScR 2096560

	→6357163	6357771 - 6368386
	→5190331	5190612 - 5197137
	→11/2007	11/2007 - 01/2008

Suitable gasket kit

HD 301232

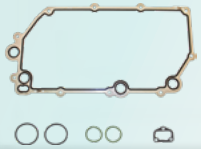

GPR	KN	9, 11, 13
		1. generation
6357164 - 6357770	6368387 - 6642455	
2032133 - 2032292	2034886 - 2057788	
5190332 - 5190611	5197138 - 5249942	
11/2007 - 11/2007	01/2008 - 10/2010	

114, 124	**114, 124**	11, 12
		6106283 - 6248130
1258521 - 2006405		
03/2000 - 01/2005		

301231

Gasket kit → oil cooler cover



ScR 1502798

NBR

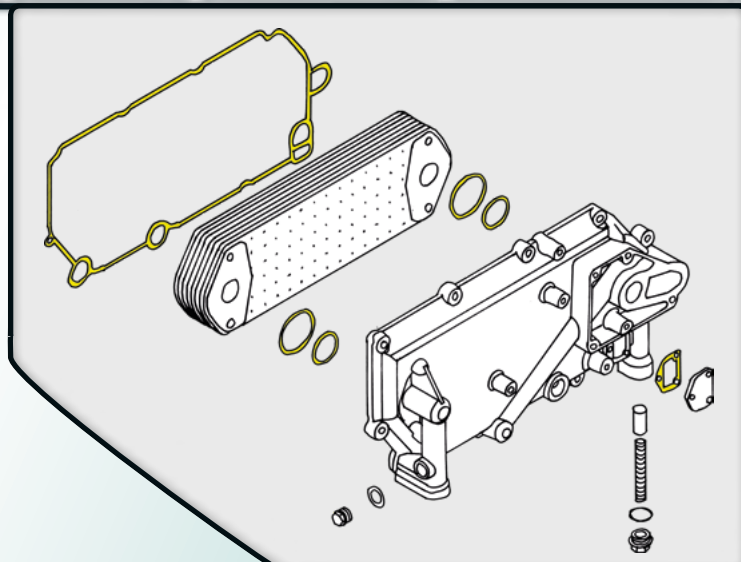

ScR 1484766



Oval rings
Овальные кольца

ScR 1484765



Oval rings
Овальные кольца

ScR 1391726



Replaced by:

HD 301212



HD 301232

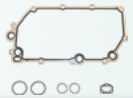

kg 0,06

NBR: -30°C → +120°C
FPM: -25°C → +200°C

	GPR	KN
9, 11, 12		
1. generation		
	6029857 - 6357163	6357771 - 6368386
	5101275 - 5190338	5190612 - 5197137
	04/2004 - 11/2007	11/2007 - 01/2008

	114, 124	114, 124
11, 12		
	6106283 - 6220664	
	1258517 - 2000002	
	03/2000 - 04/2004	

301232

Gasket kit → oil cooler cover

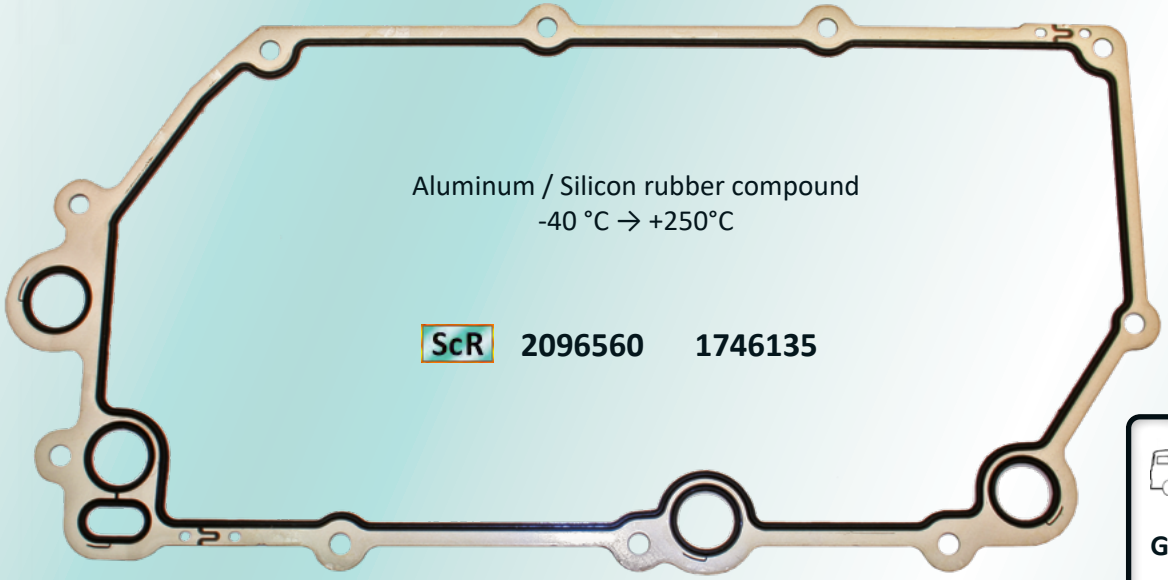

Aluminum / Silicon rubber compound
-40 °C → +250°C

ScR 2096560 1746135

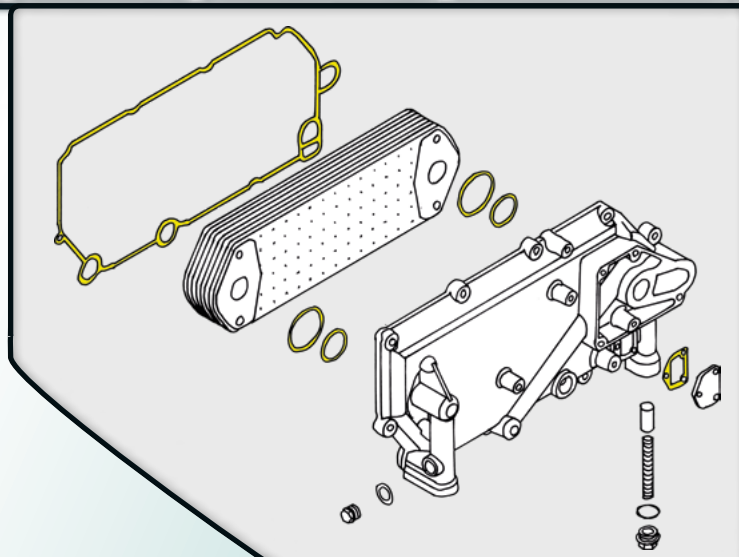

		9, 11, 13	1. generation
GPR	**KN**		
6357164 - 6357770	6368387 - 6642455		
2032133 - 2032292	2034886 - 2057788		
5190332 - 5190611	5197138 - 5249942		
11/2007 - 11/2007	01/2008 - 10/2010		

		11, 12
114, 124	**114, 124**	
6106283 - 6248130		
1258521 - 2006405		
03/2000 - 01/2005		

ScR 1484766



Oval rings
Овальные кольца

ScR 1484765



Oval rings
Овальные кольца

ScR 1391726



Suitable cover

HD 301212



kg 0,20

NBR: -30°C → +120°C
FPM: -25°C → +200°C

301233

Gasket kit → oil cooler cover

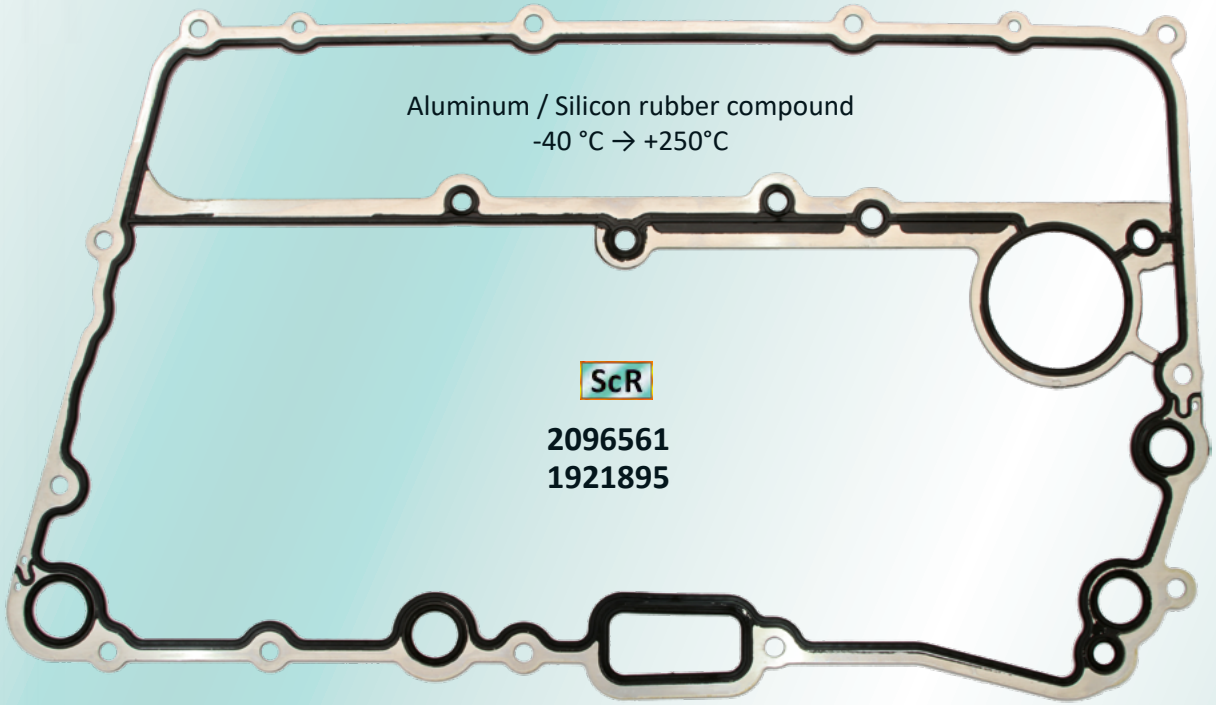

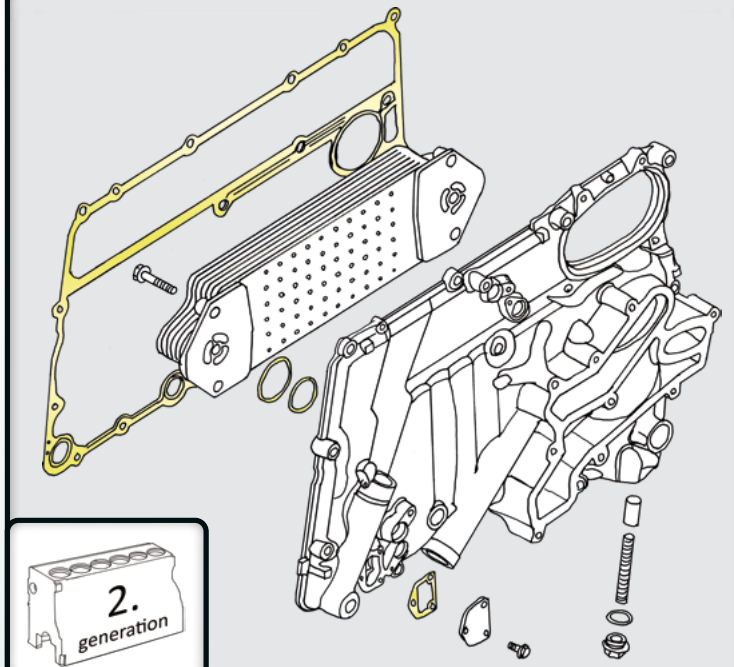

LPGRS	08/2016 →	9, 13
GPR	10/2010 - 2018	9, 13
KN	10/2010→	9, 13

ScR 1484766



Oval rings
Овальные кольца

ScR 1484765



Oval rings
Овальные кольца

ScR 1391726



0,8 mm

kg 0,45

NBR: -30°C → +120°C
FPM: -25°C → +200°C

Suitable cover:

HD 301214
ScR 2175675



301360

O - ring kit → oil cleaner

Special paper strip 377 x 88 x 0,25 mm

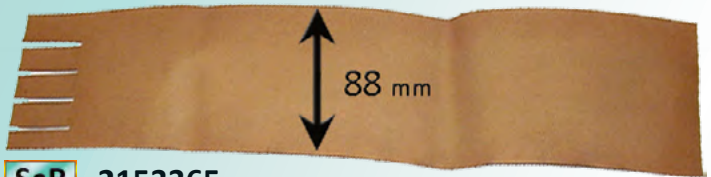

ScR 2153365



ScR
1769799
372985
211818

133,00 x 3,53 x 140,06 mm
-40°C → +120°C
NBR A70 Shore

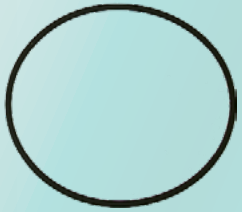

ScR
1769800
1475433

117,07 x 3,53 x 124,13 mm
-40°C → +120°C
NBR A70 Shore

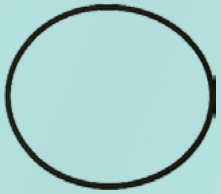

ScR
1769798
372984
290534

110,70 x 4,00 x 118,70 mm
-40°C → +120°C
NBR A70 Shore



ScR
2419091
1439814
1423610

24,2 x 4,2 mm Bonded seal
-20°C → +250°C
Steel / FPM (Viton) A70 Shore



ScR 372983

10,78 x 2,62 x 16,02 mm
-20°C → +250°C
FPM (Viton) A70 Shore

kg 0,04

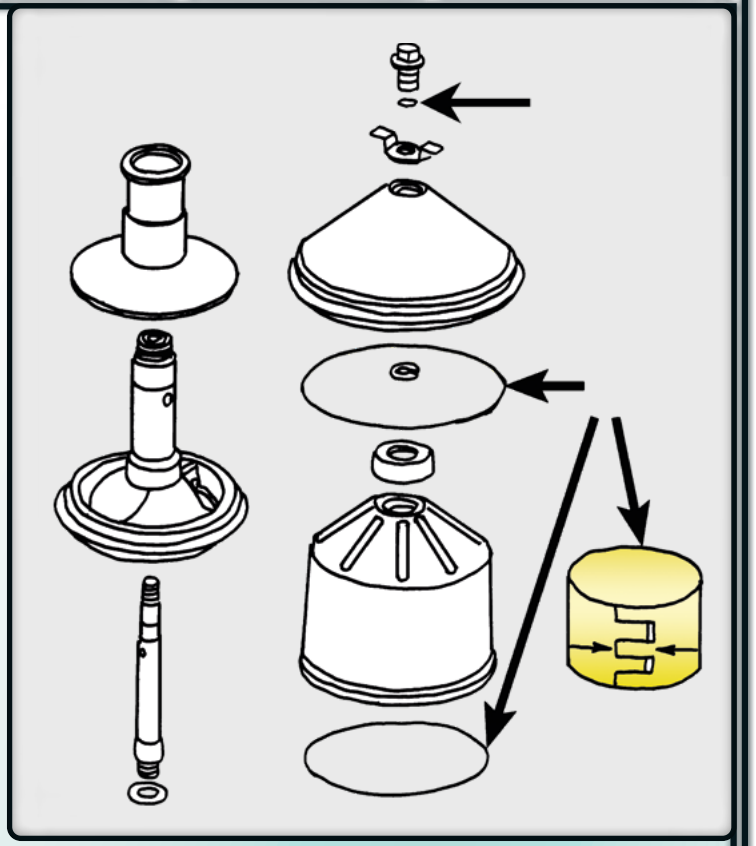



For all Scanias
На все Scania

(LPGRS)

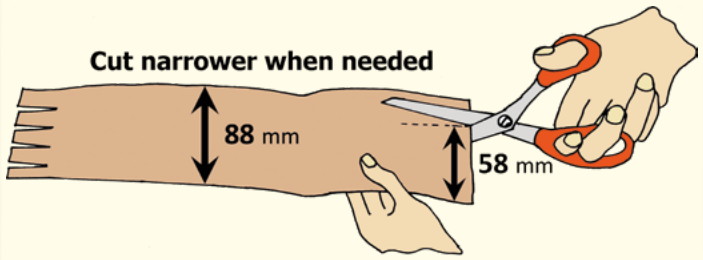

302060

Stay 355 mm → Radiator suspension

ScR **1850649**

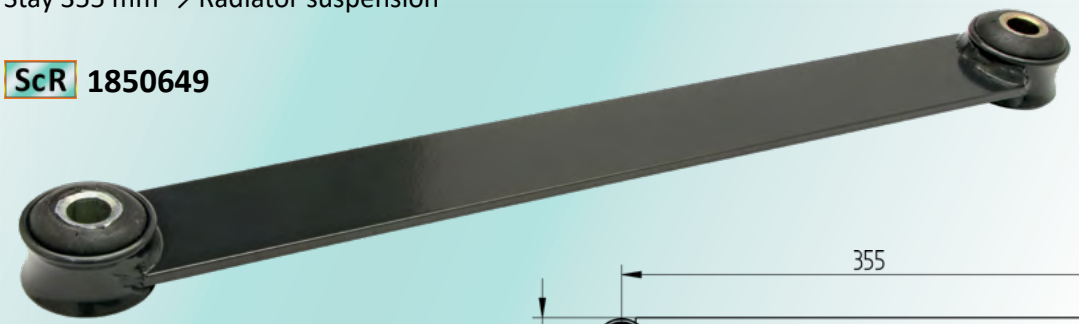



kg 0,64

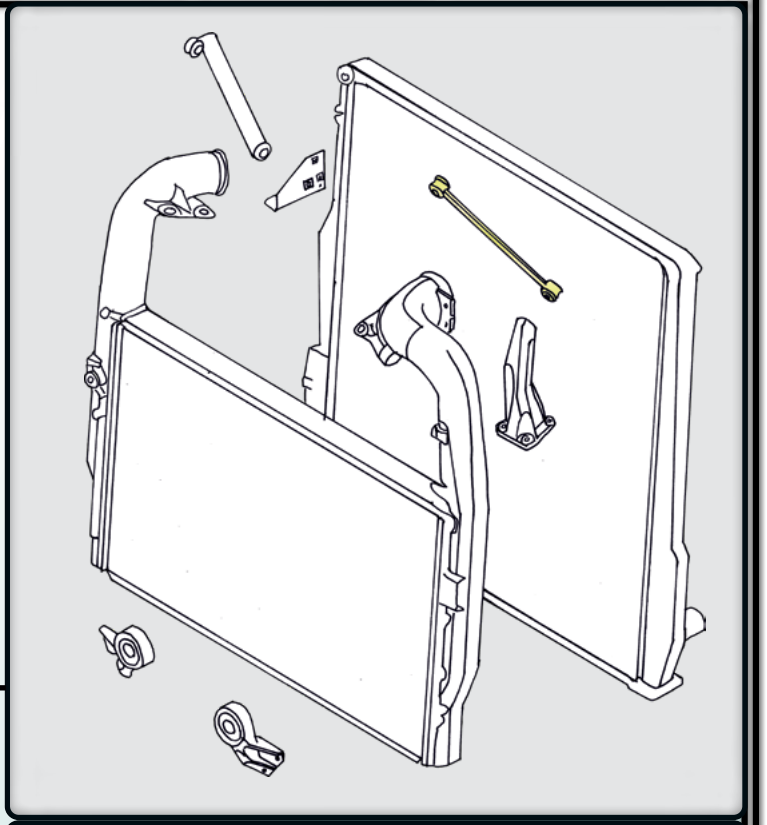

302061

Stay 367 mm → Radiator suspension

ScR **1790529**

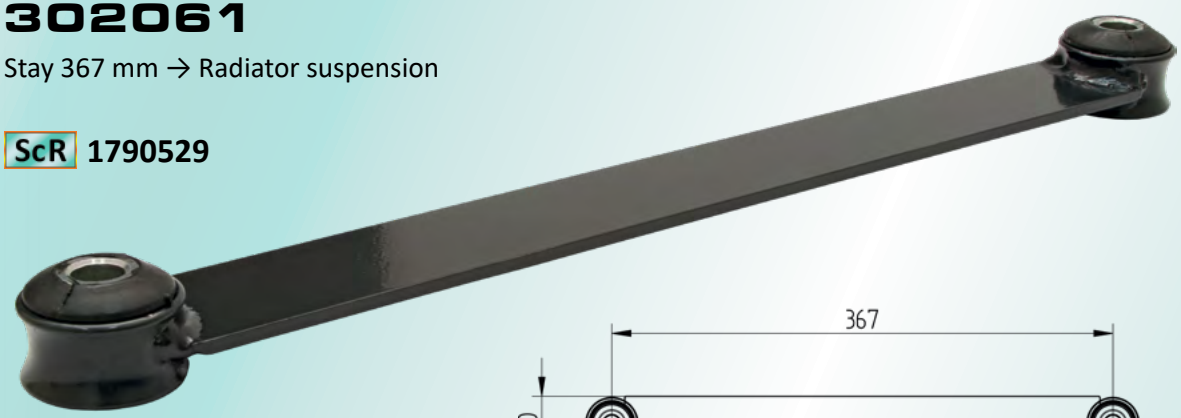



kg 0,64

10/2010 → 2018

302060 (355 mm) → GR

302061 (367 mm) → R

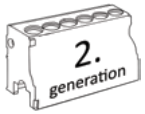

302062

Stay 455 mm → Radiator suspension

ScR **1872076**

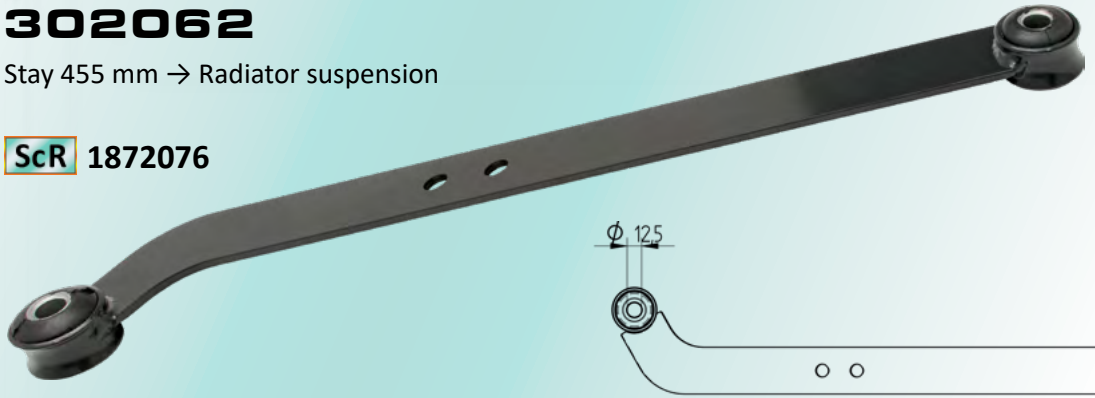

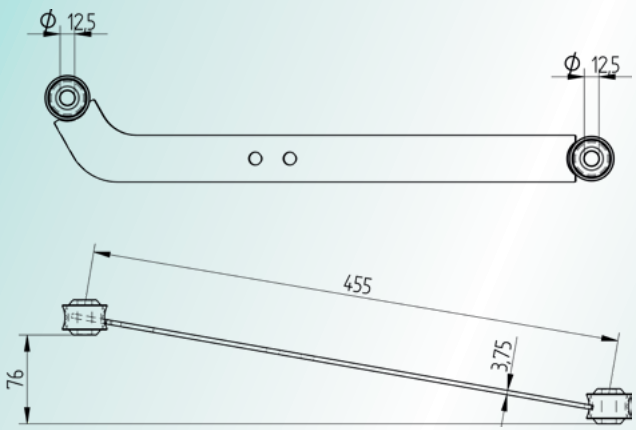

kg 0,76

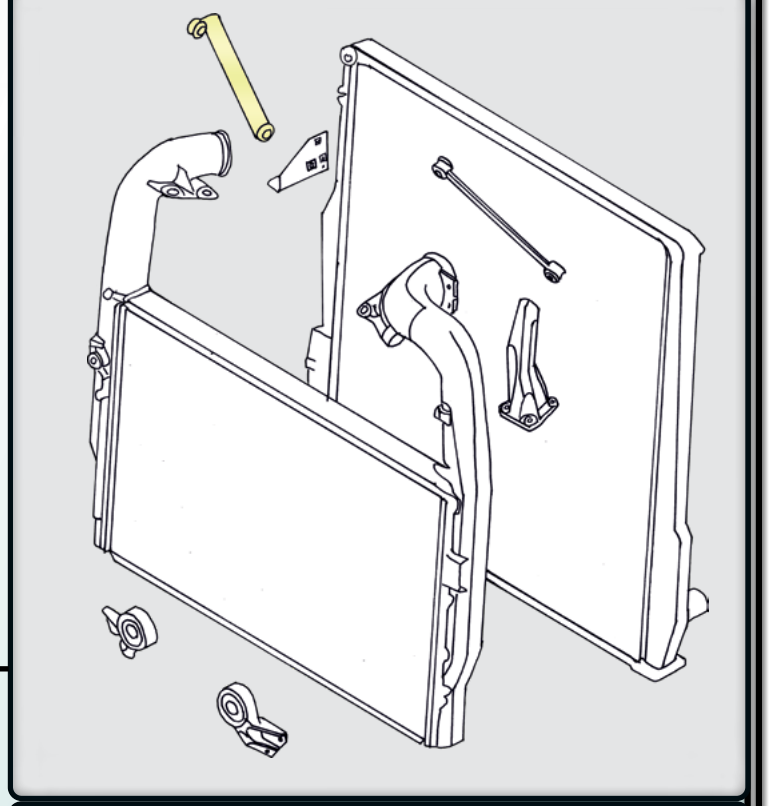

302064

Stay 515 mm → Radiator suspension

ScR **1850650**

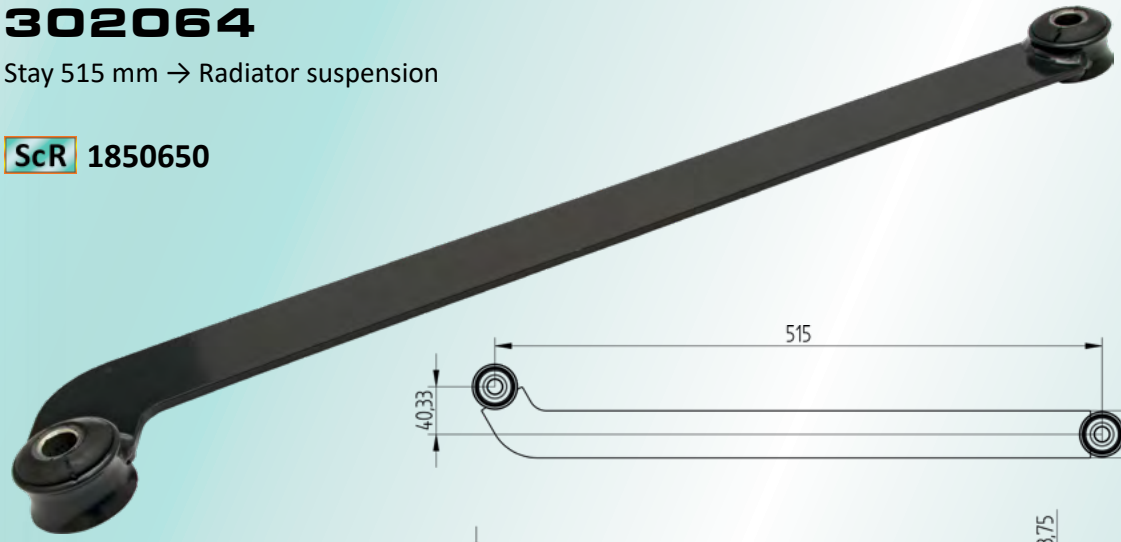

kg 0,86

10/2010 → 2018

302062 (455 mm) → R

302064 (515 mm) → G

2. generation

302065

Bracket → Radiator suspension

ScR

2012432
1872075



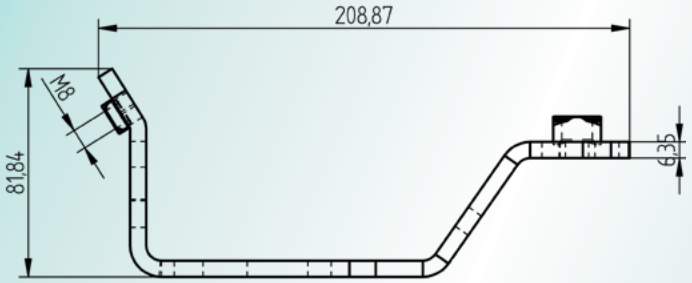

kg 1,5

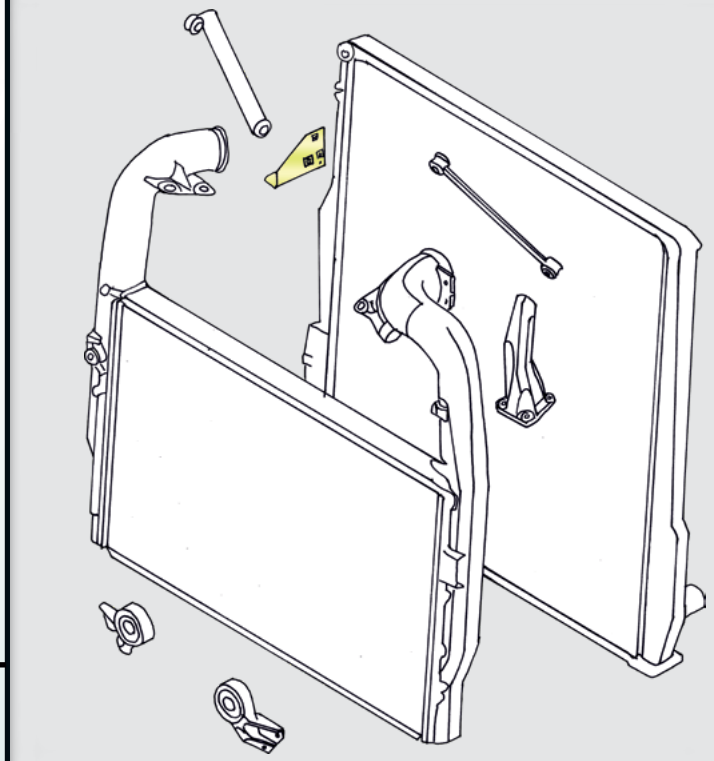

302066

Bracket → Radiator suspension

ScR **1800646**



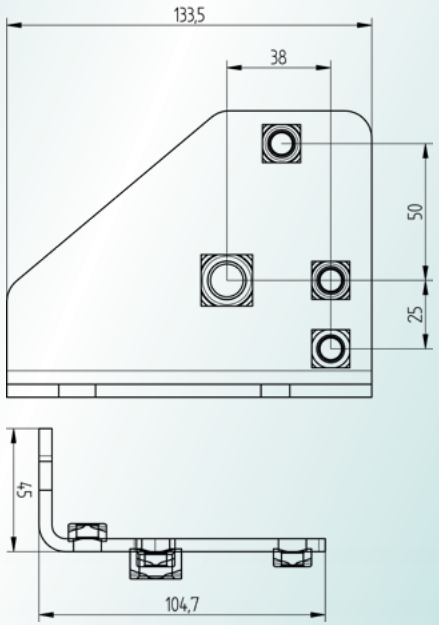

kg 0,64

10/2010 → 2018

302065 → R

302066 → G

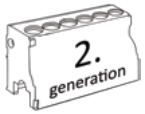

302070

Bracket, left → transmission Oil cooler

ScR

1849251
1547309



kg 0,85

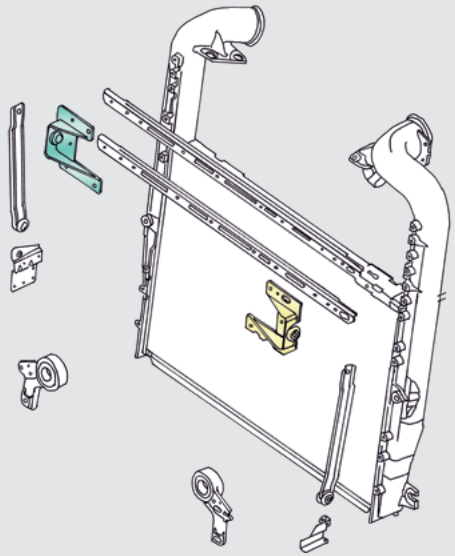

Cylinder block generation 1.

→ 10/2010

CG / CR

D9, D11, D12, D16

CG / CR

D13

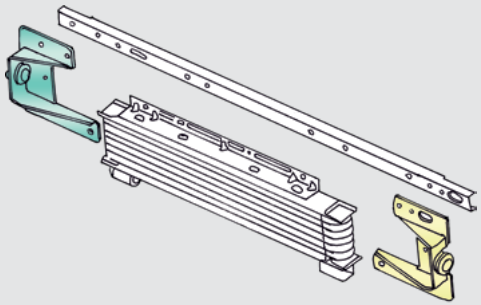

GPR 2004 - 2018

DC13, DC16

Gear box oil cooling system

302071

Bracket, right → transmission Oil cooler

ScR

1849250
1547308



kg 0,90

302072

Stay → Radiator

ScR **1776270**

Dimensions:
Length: 376,5 mm
Width: 46,5 mm



kg 0,58

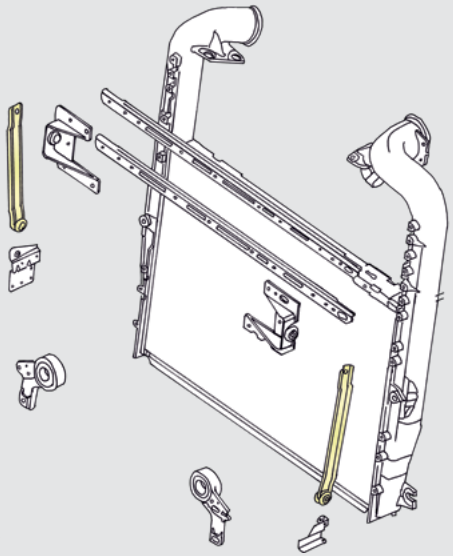

Cylinder block generation 1.

→ 10/2010

CG / CR

D9, D11, D12, D16

CG / CR

D13

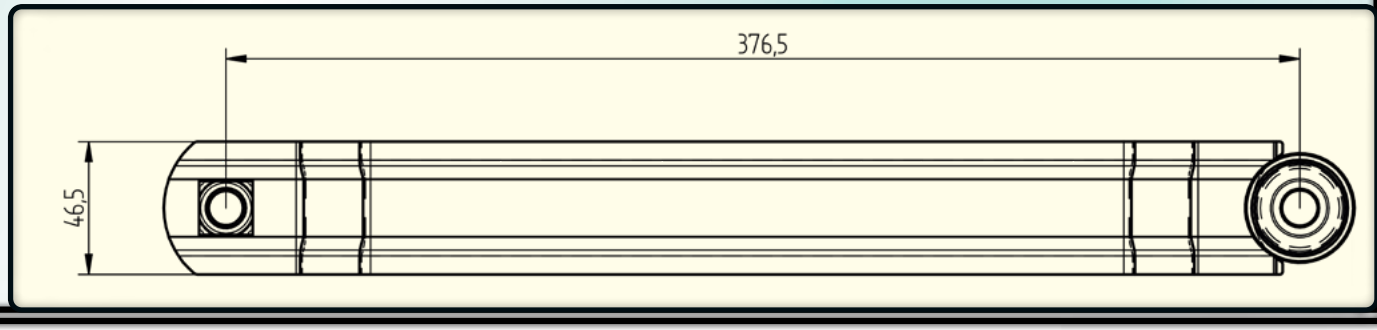

302073

Bracket, left → Radiator

ScR 1776269



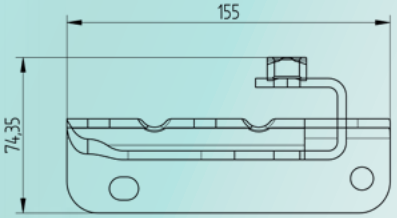

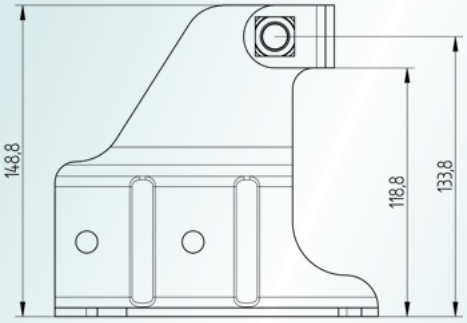

kg 0,8

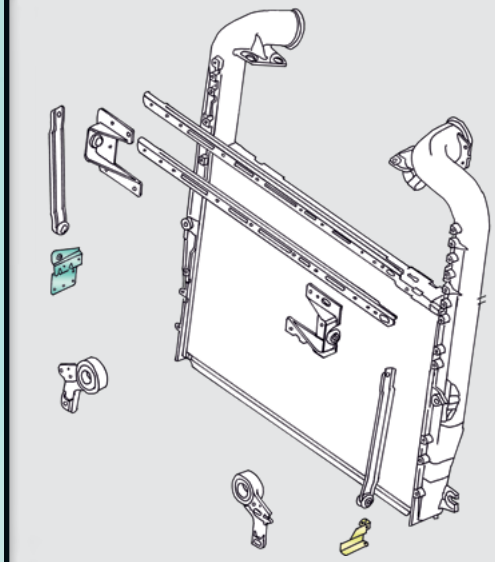

Cylinder block generation 1.

→ 10/2010

CG / CR

D9, D11, D12, D16

CG / CR

D13

302074

Bracket, right → Radiator

ScR 1776271



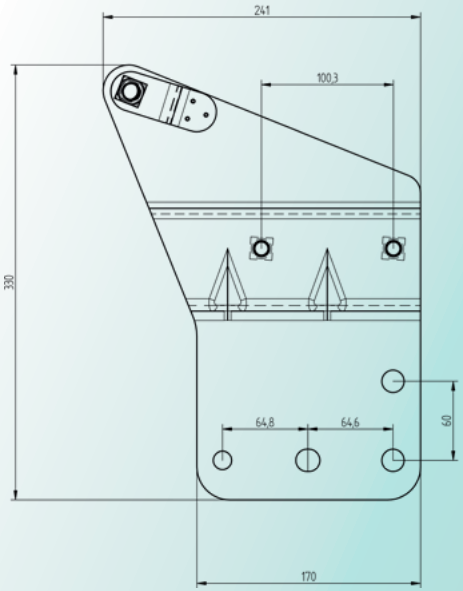

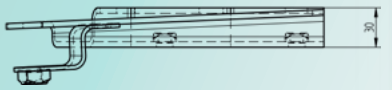

kg 2,0

302076

Bracket → Radiator / Transmission

ScR

2093497
1849249



Dimensions:
Length: 952 mm
Width: 36,6 mm
Thickness: 18 mm

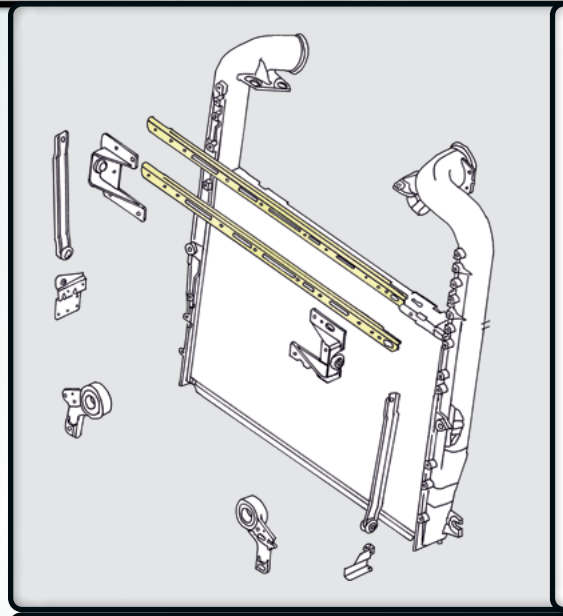

Cylinder block generation 1.
→ 10/2010

CG / CR
D9, D11, D12, D16

CG / CR
D13

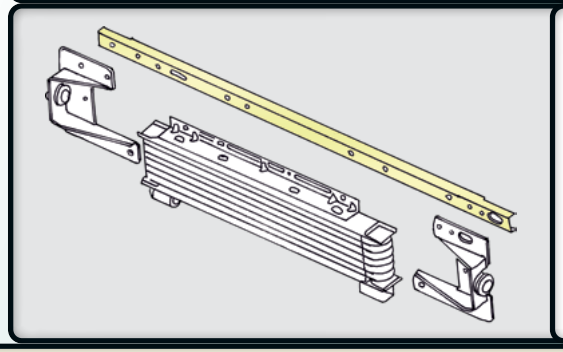

GPR 2004 - 2018

DC13, DC16

Gear box oil cooling system

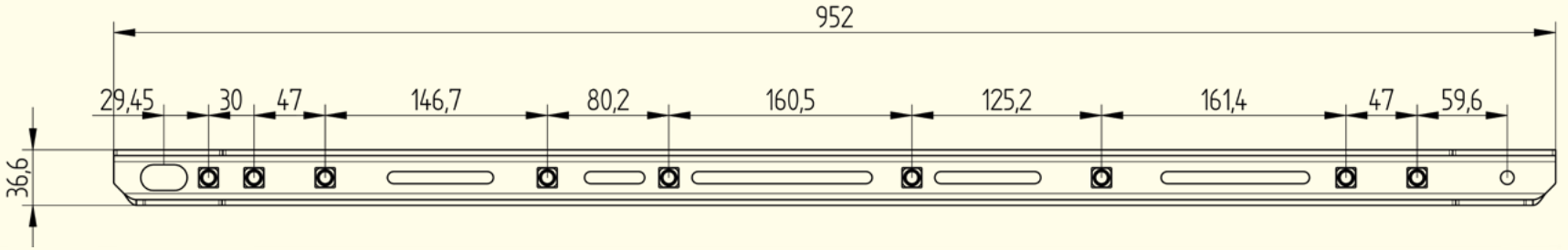

kg 1,54

302078

Rail, left → Mounting the radiator suspension 83+100 dm² radiators

ScR 2491241

Dimensions:
653 x 93,02 x 3,0 mm

Material: Steel

Coating: Black paint



kg 1,18

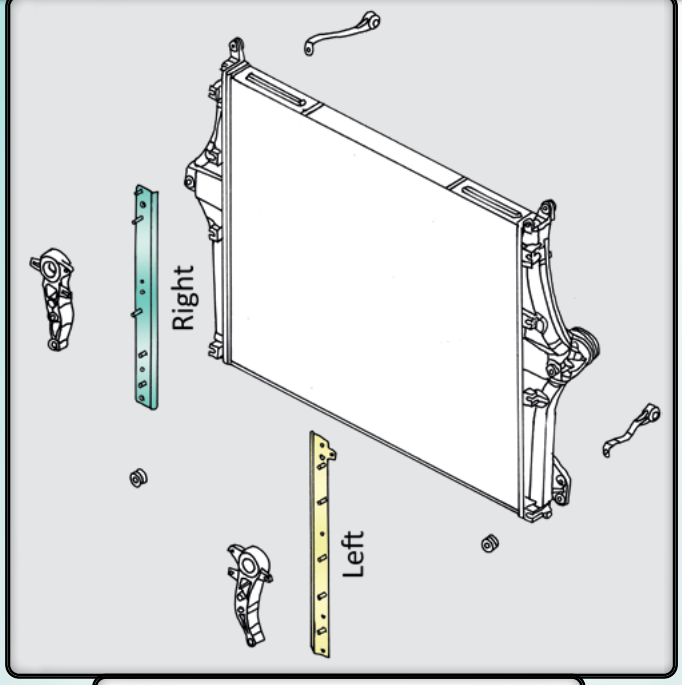

LPGRS 08/2016 →

302079

Rail, right → Mounting the radiator suspension 83+100 dm² radiators

ScR 2491243

Dimensions:
653 x 63,44 x 3,0 mm

Material: Steel

Coating: Black paint



kg 1,09

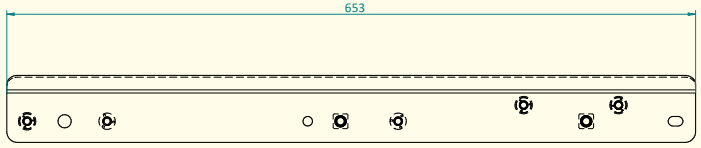

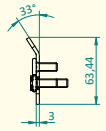

302081

Bracket → Cab cooler tube system

ScR

2502771
2302011

Threads: M06 x 1,0 mm

Material: Steel

Coating: Black paint

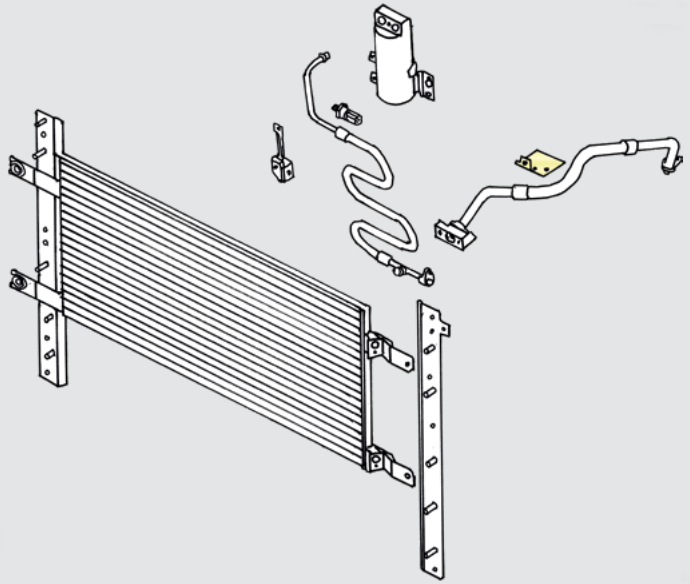

LPGRS 08/2016 →

kg 0,08

302302

Hose, red

ScR

1809771
1794725
1522011
1522010
1442579



Materials:

Silicon, fabric polyester
Hardness A70 shore

Aluminum

Stainless steel wire

Frost resistance:
-40 °C → +230°C

kg 0,46

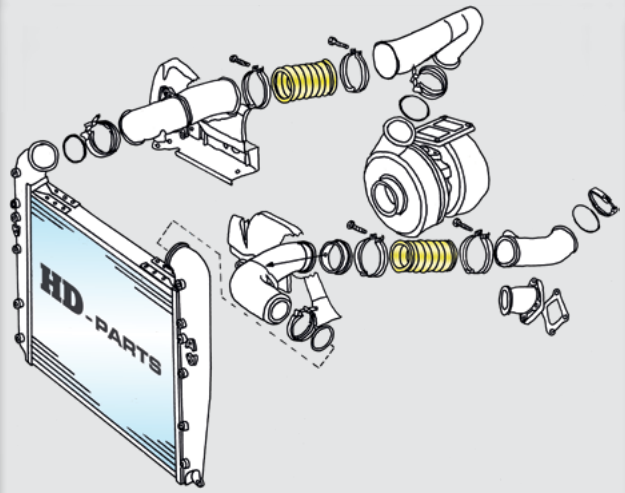



Can be used to replace the black hose

GPR	04/2004 - 2018
94 - 164	1995 → 12/2004

KN	11/2005→
94 N	→ 11/2006

302207

XPI - E**x**treme high **P**ressure **I**njection

Expansion tank

ScR

2401669
1949013
1800825



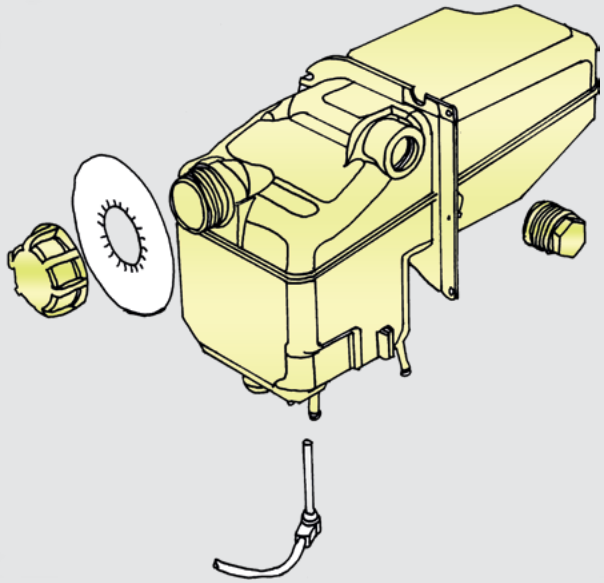

Material:
Plastic PA 66GF30

Frost resistance:
-30 → +135 °C

kg 4,77

GPR	04/2004 - 2018
94 - 164	1995 - 12/2004

XPI

PDE / HPI (PDE / HPI version: ScR 2401668)

New design HD tank corresponds ScR 2401669 which came on the market:

2114534→	23.06.2015→
5395553→	24.06.2015→
9199408→	26.06.2015→
3881803→	01.10.2015→

New design tank replaces old tanks.

302206

Expansion tank

HPI - **H**igh **P**ressure **I**njection
PDE - Pump nozzle unit



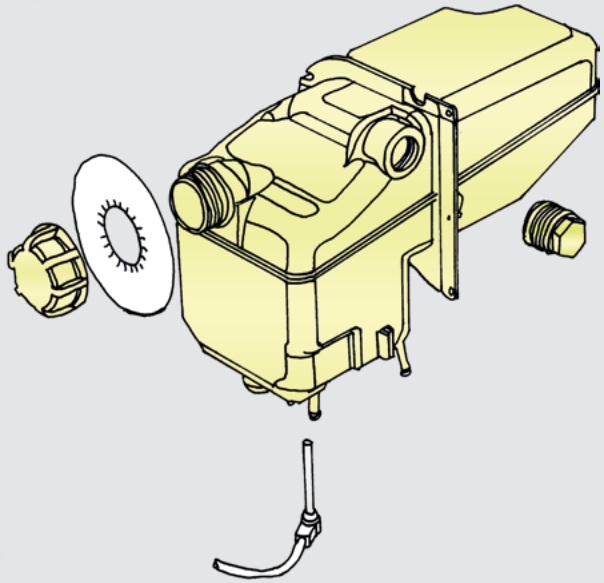

ScR

2401668
1894478
1855164
1765735
1511775
1492421
1421090
1385966
1370707

Material:
Plastic PA 66GF30

Frost resistance:
-30 → +135 °C

kg 3,29

GPR 04/2004 - 2018
94 - 164 1995 - 12/2004

PDE / HPI

XPI (XPI version: HD 302207 ScR 2401669)

302205

Cap for expansion tank

With air valve



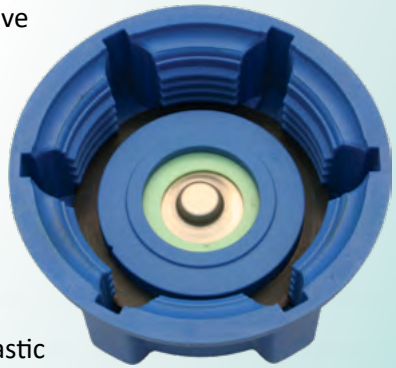

Material: Plastic

ScR **1874363**
1849428
1757490
1374050

kg 0,09

New design HD tank corresponds which came on the market: ScR 2401668

2116100→	10.10.2015→
5399889→	31.08.2015→
9200682→	01.09.2015→
3881803→	01.10.2015→

New design tank replaces old tanks.

302160

Thermostat

ScR

1916620
1404924
1358995
1423450

Material:
Stainless steel
Copper
Brass

+/- 2 Temperatures:
80°C Full open temp: 93°C
87°C Full open temp: 100°C

Full open stroke: 8 mm
Full length: 122,5 mm

kg 0,28



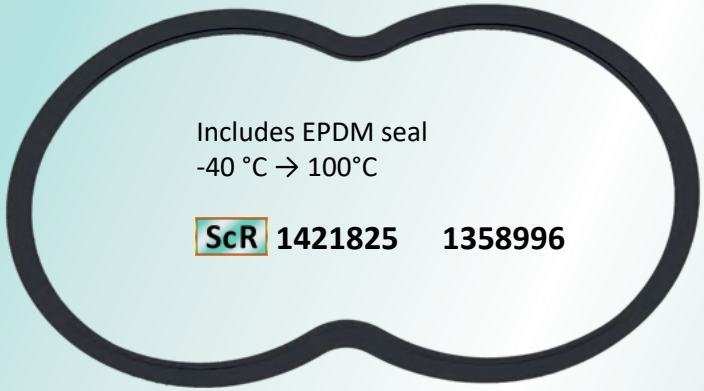

Includes EPDM seal
-40 °C → 100°C

ScR **1421825** **1358996**

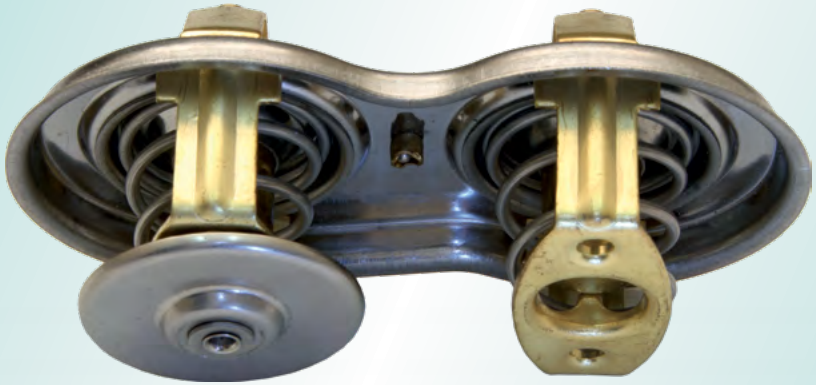

Outer cover
ScR
1478655
1398473 SLA

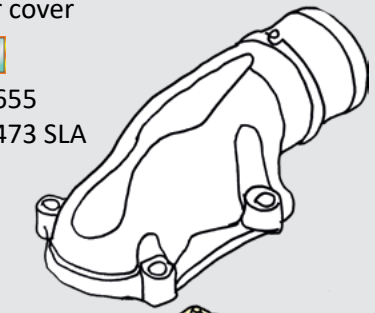

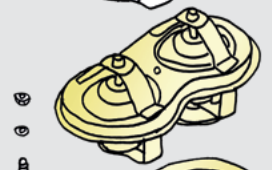

Temperature sensor
ScR 309065 1-pole

Gasket Ø14mm green
ScR 1373792

Inner cover
ScR
1484914 D12
1484919 D9 PDE

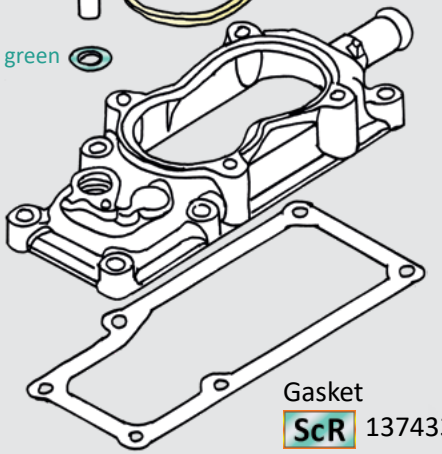

Gasket
ScR 1374333

GPR	9 PDE, D11, D12	04/2004→
114	D11-01/02/03/04/06/07	Euro 2/3
114, 124	D11, D12	→12/2004
144	D14	→08/2001

302154

Thermostat

ScR

1745449
1404925
1347594

Material:
Stainless steel
Copper
Brass

+/- 2 Temperatures:
75°C Full open temp: 88°C
80°C Full open temp: 93°C

Full open stroke: 8 mm
Full length: 154 mm

kg 0,38

75 °C 80 °C

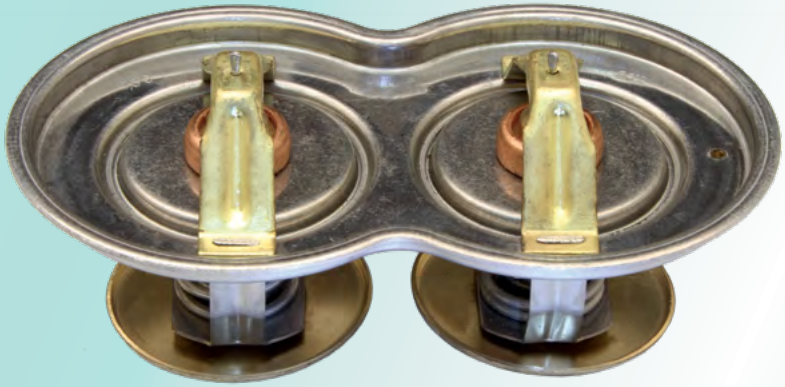

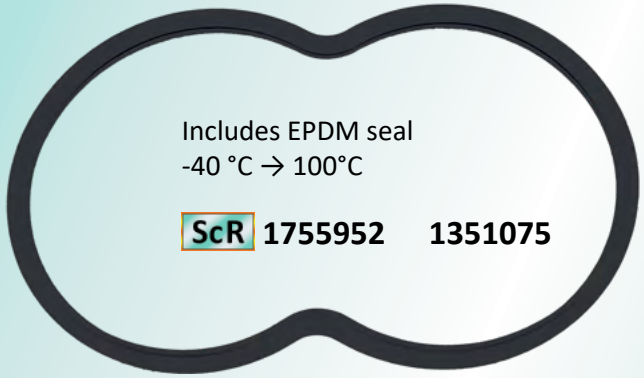

Includes EPDM seal
-40 °C → 100°C

ScR **1755952** **1351075**

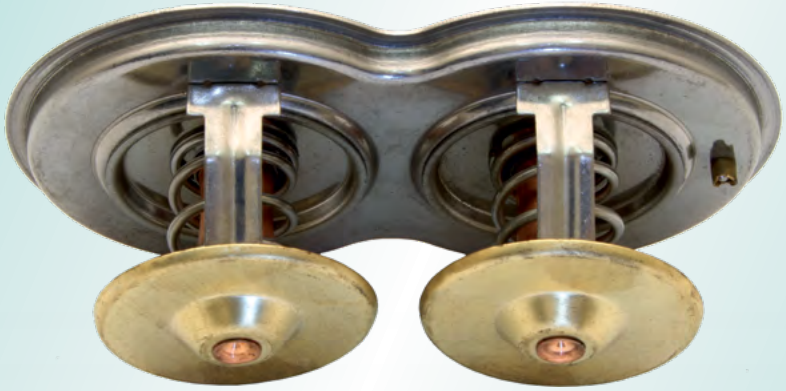



Upper cover

ScR 1381495

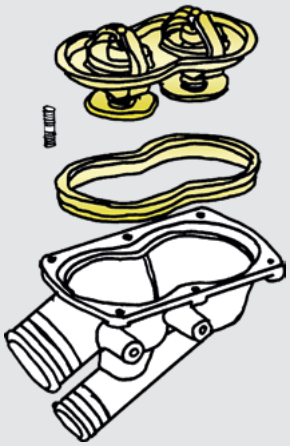

Lower cover

ScR 1381494

GPR	D9/11/12/13/16 OC09	04/2004→12/2006
	→2022564, →5163292, →9116155	
94	D9	→12/2004
114	DC11 - 74/75/79	→12/2004
124	D12 with retarder	→12/2004
144	D14 with retarder	→12/2004
164	D16	→12/2004

KN	ALL	11/2005→
K94, K111, K124		→11/2006
L94, N94		

302157

Thermostat

ScR **2281640**

96 °C 89 °C

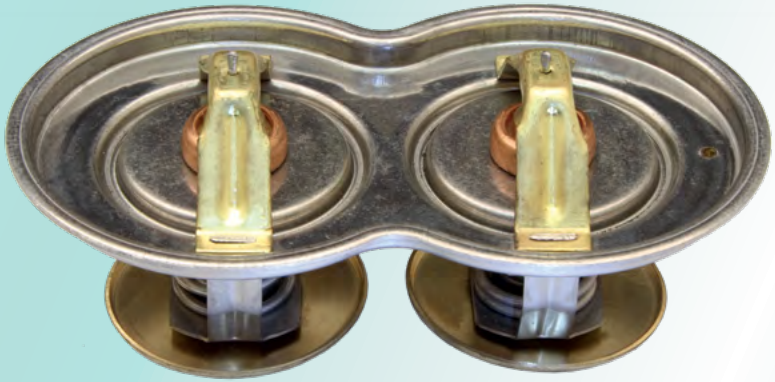

Material:
Stainless steel
Copper
Brass

+/- 2 Temperatures:
89°C Full open temp: 102°C
96°C Full open temp: 109°C

Full open stroke: 8 mm
Full length: 154 mm

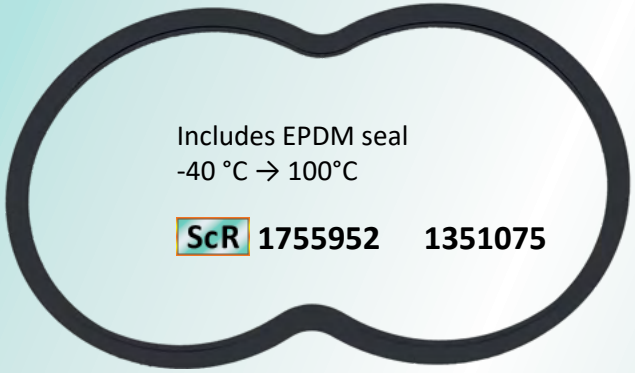

Includes EPDM seal
-40 °C → 100°C

ScR **1755952** **1351075**

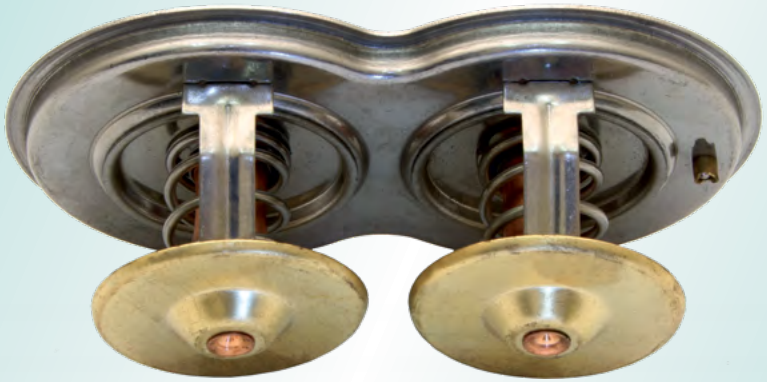

kg 0,38

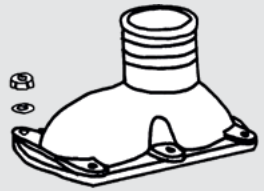

Upper cover

ScR 1381495

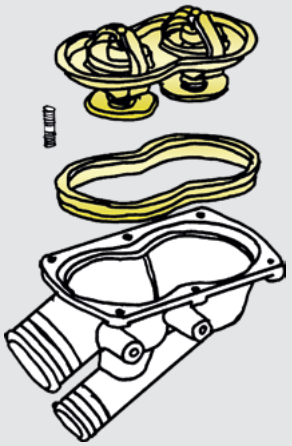

Lower cover

ScR 1381494

GR D13 06/2009 - 2018

1140 mm Chassis front end width

302156

87 °C 80 °C

Thermostat

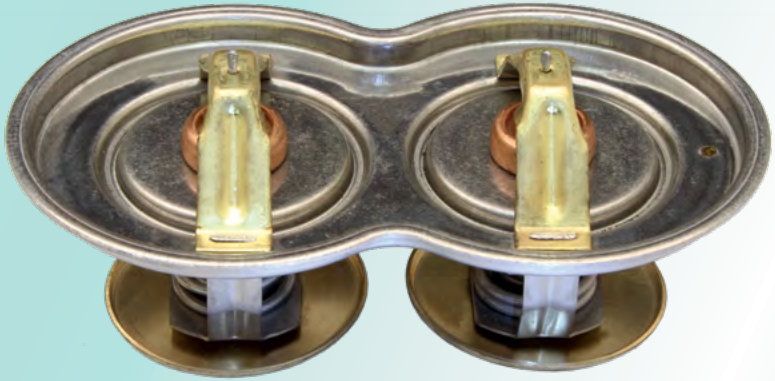

ScR

1849060
1499757
1800909
1423451

Material:
Stainless steel
Copper
Brass

+/- 2 Temperatures:
87°C Full open temp: 100°C
80°C Full open temp: 93°C

Full open stroke: 8 mm
Full length: 154 mm

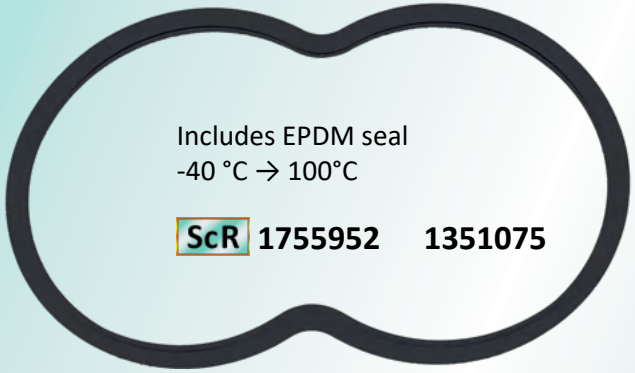

Includes EPDM seal
-40 °C → 100°C

ScR **1755952** **1351075**

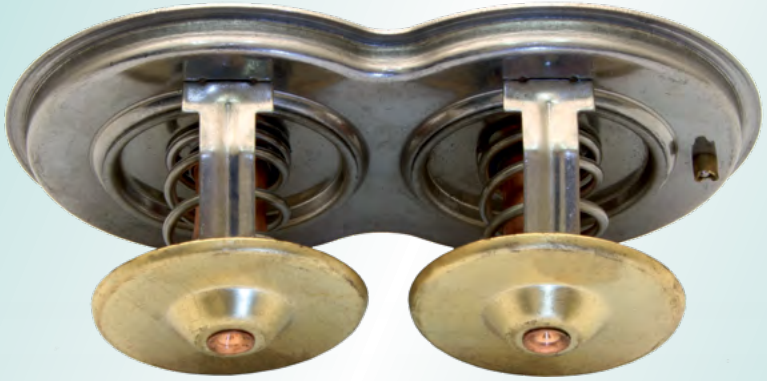

kg 0,38

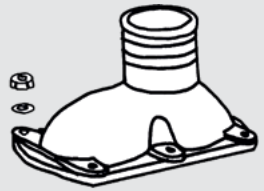

Upper cover

ScR 1381495

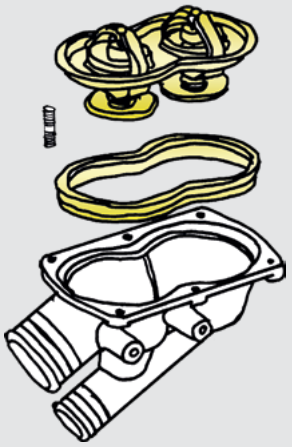

Lower cover

ScR 1381494

GPR D9/11/12/13/16 OC09 12/2006→
2022565→, 5163293→, 9116156→
1020 mm Chassis front end width

GR D13
1140 mm Chassis front end width

114 D11 - 01/02/03/04/06/07
124, 144

KN

302168

Thermostat

89 °C 96 °C

ScR

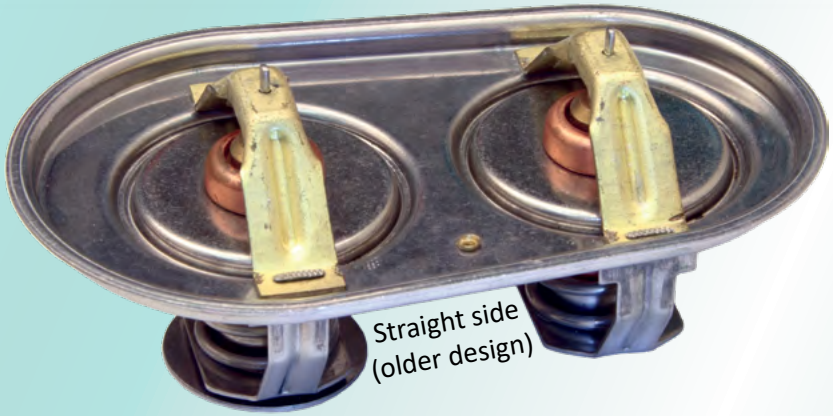

Material:
Stainless steel
Copper
Brass

+/- 2 Temperatures:
89°C Full open temp: 102°C
96°C Full open temp: 109°C

Full open stroke: 8 mm
Full length: 149,25 mm



Includes EPDM seal
-40 °C → 100°C

ScR **1545906**

Straight side (older design)



kg 0,32

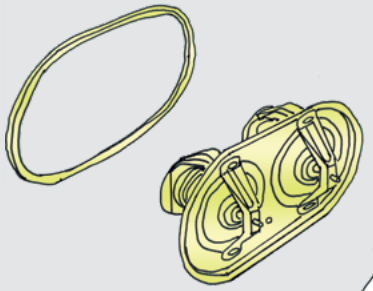

Cover

ScR 1793028

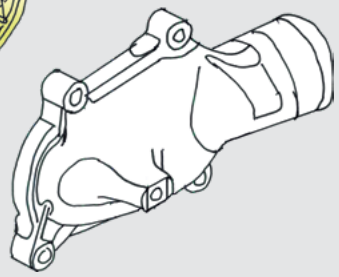

GPR 13

Only when **straight** sided thermostat is possible to use.

302166

Thermostat

ScR **1545904**

80 °C 87 °C

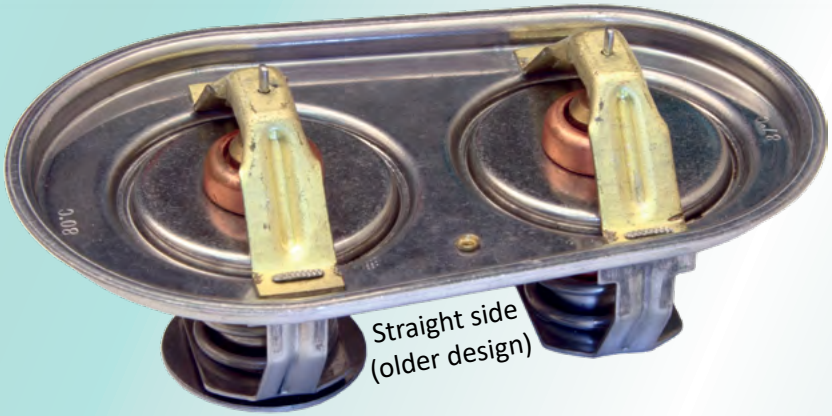

Straight side (older design)

Material:
Stainless steel
Copper
Brass

+/- 2 Temperatures:
80°C Full open temp: 93°C
87°C Full open temp: 99°C

Full open stroke: 9 mm
Full length: 149,2 mm



Includes EPDM seal
-40 °C → 100°C

ScR **1545906**

Straight side (older design)



kg 0,32

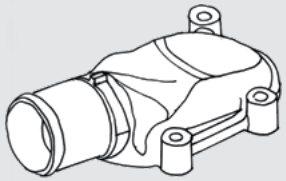

Upper cover
ScR 1943592

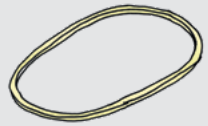

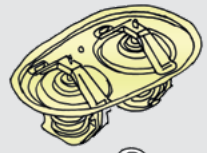

R
16 XPI
Only when **straight** sided thermostat is possible to use.

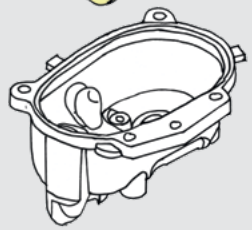

Lower cover
ScR 1943703

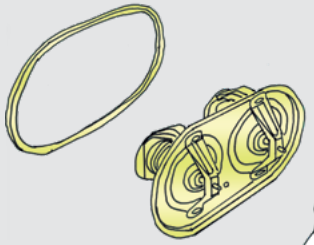

Cover
ScR 1793028

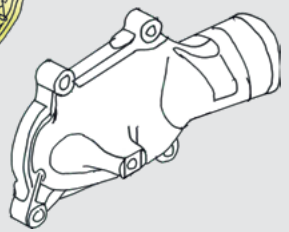

GPR
9, 13
Only when **straight** sided thermostat is possible to use.

302172

Thermostat

ScR **2281641**

96 °C 89 °C

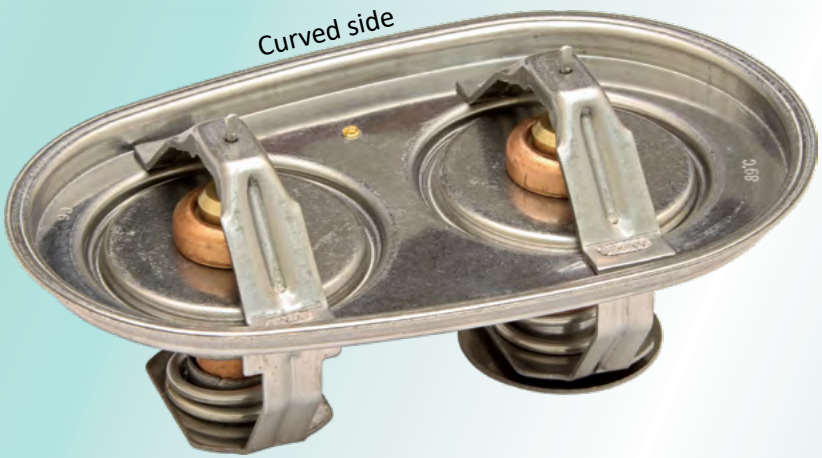

Material:
Stainless steel
Copper
Brass

+/- 2 Temperatures:
89°C Full open temp: 102°C
96°C Full open temp: 109°C

Full open stroke: 8 mm
Full length: 149,25 mm

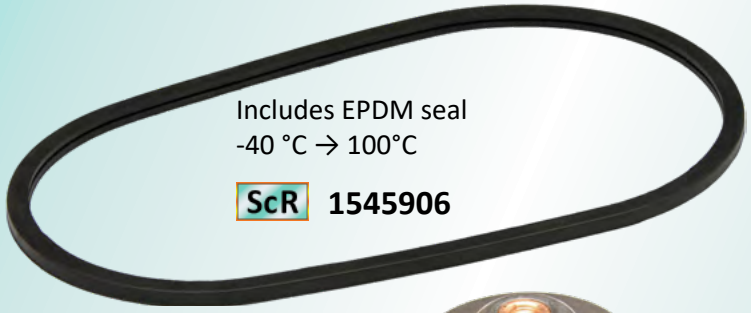

Includes EPDM seal
-40 °C → 100°C

ScR **1545906**

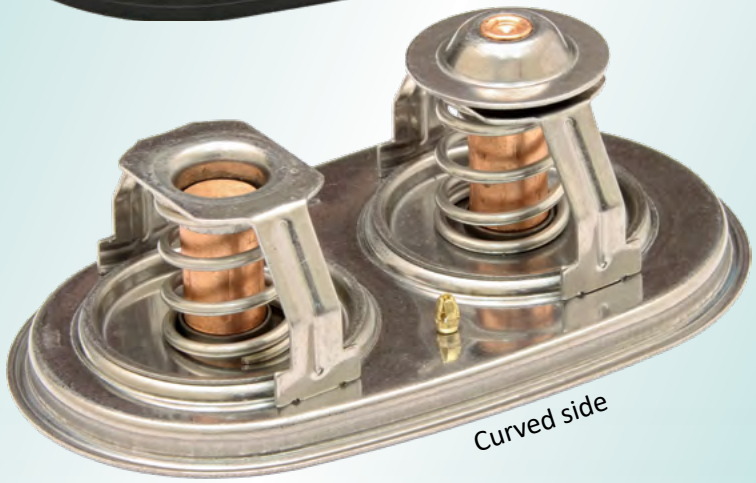

kg 0,32

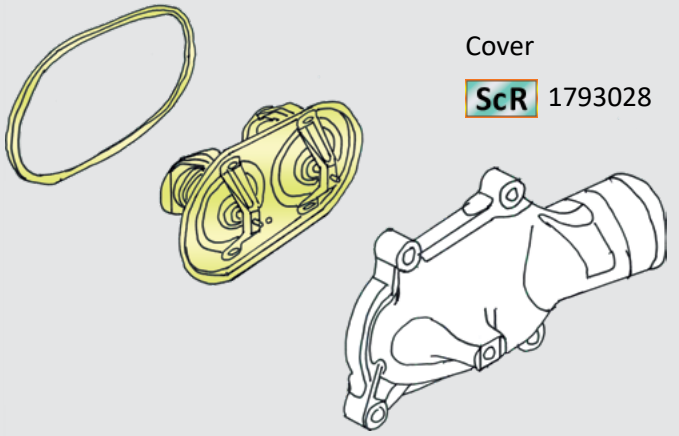

Cover

ScR 1793028

GPR 13

Only when **curved** side thermostat is possible to use.

GPRS 9, 13 09/2016→
Without retarder

302170

Thermostat

ScR **1935712**

80 °C 87 °C

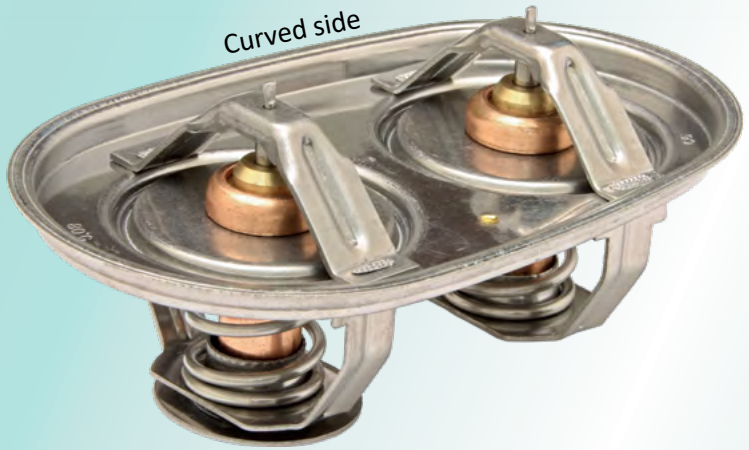

Material:
Stainless steel
Copper
Brass

+/- 2 Temperatures:
80°C Full open temp: 93°C
87°C Full open temp: 99°C

Full open stroke: 8 mm
Full length: 149,25 mm



Includes EPDM seal
-40 °C → 100°C

ScR **1545906**

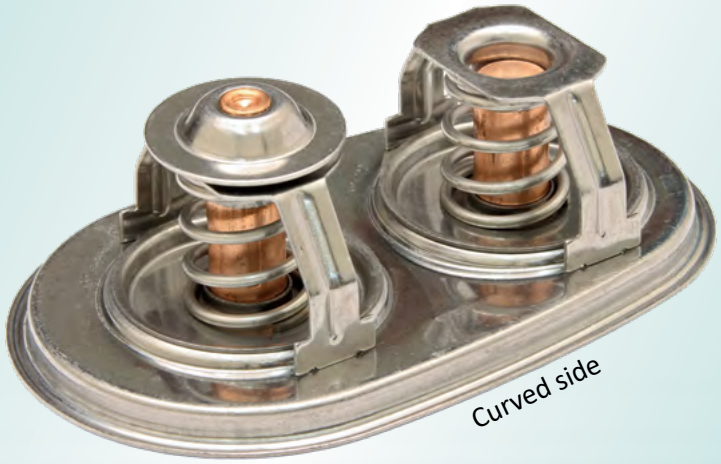

kg 0,32

Upper cover

ScR 1943592

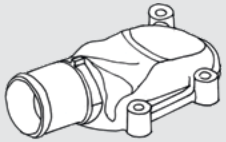





Lower cover

ScR 1943703

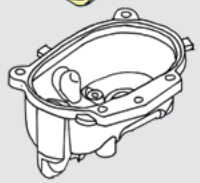

R

16 XPI

Only when **curved** side thermostat is possible to use.

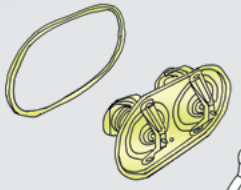

Cover

ScR 1793028

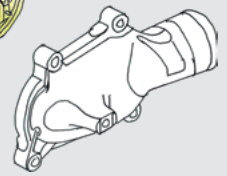

GPR

9, 13

Only when **curved** side thermostat is possible to use.

GPRS	9, 13	09/2016→

Without retarder

302175

Thermostat

ScR **2268067**

89 / 96 °C

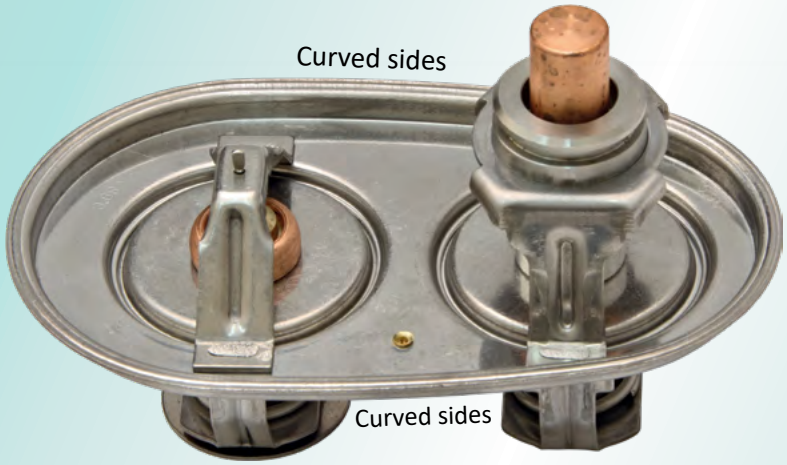

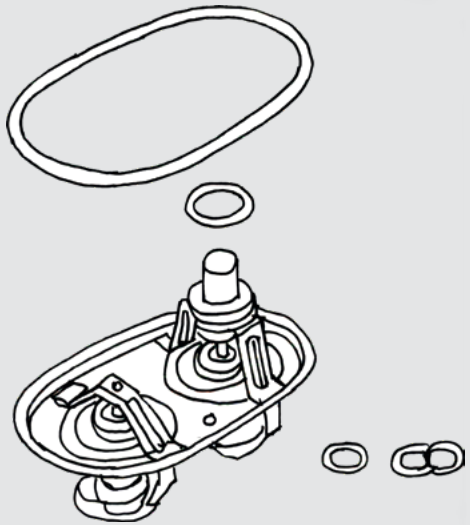

ScR **2214444**
8-seal FPM 16 only



ScR **804658**
Ø 15,3 mm NBR



ScR **1494100**
Ø 24,2 mm FPM



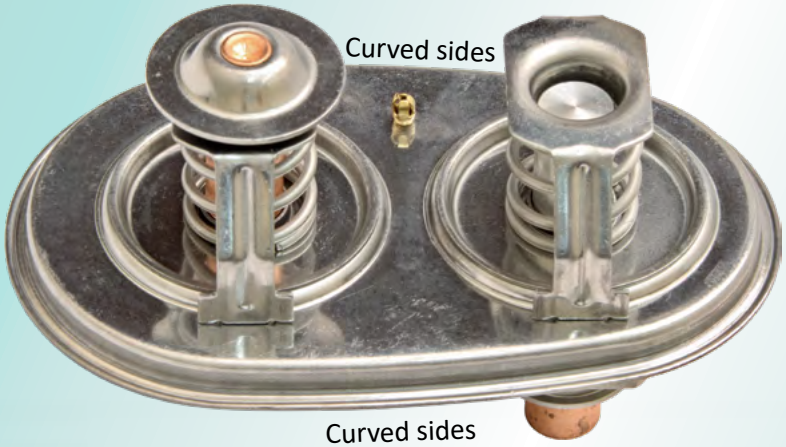

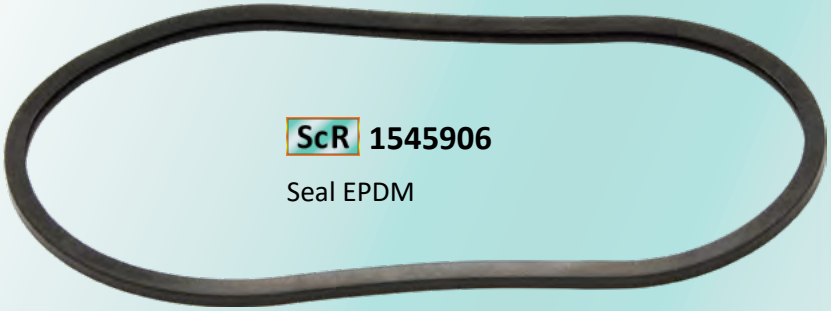

ScR **1545906**
Seal EPDM

kg 0,48

LGPRS	09, 13, 16	08/2016→
R	16	03/2016 - 2018

302174

Thermostat

ScR 2259412

80 / 87 °C

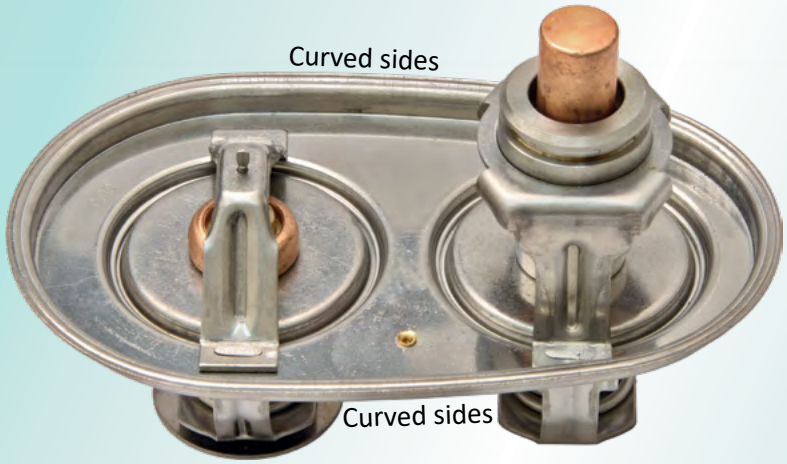

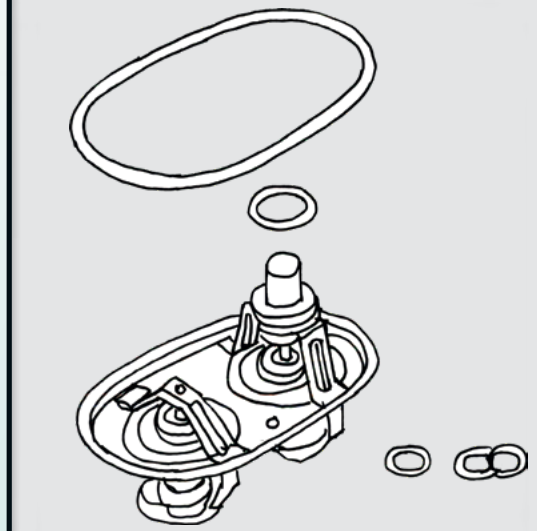

ScR 2214444
8-seal FPM 16 only



ScR 804658
Ø 15,3 mm NBR



ScR 1494100
Ø 24,2 mm FPM



ScR 1545906
Seal EPDM

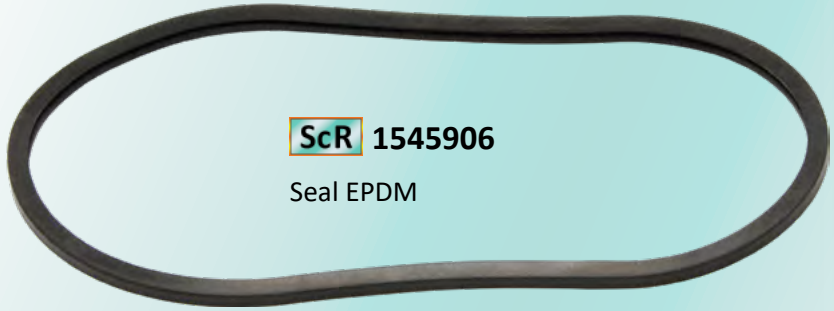

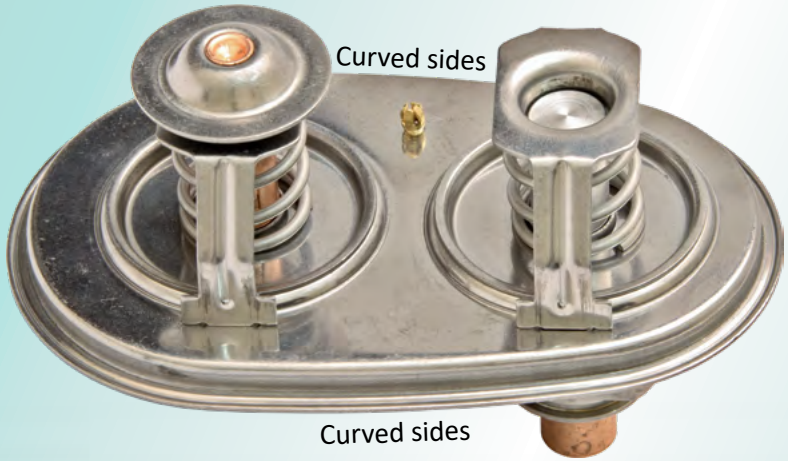

kg 0,48

LGPRS	09, 13, 16	08/2016→
R	16	03/2016 - 2018

There are 2 different thermostat types:

Straight sides:

HD	302166	ScR	1545904	80/87 °C
HD	302168	ScR	2281641	89/96 °C

Scania has replaced straight side thermostats with curved side thermostats, but then some other parts must be replaced too.



Curved sides:

HD	302170	ScR	2475974, 1935712	80/87 °C
HD	302172	ScR	2475976, 2281641	89/96 °C
HD	302174	ScR	2259412	80/87 °C
HD	302175	ScR	2268067	89/96 °C

(These new curved side thermostats do not replace any other thermostats)



Please check the housing carefully to see which kind of thermostat is required, curved or straight sided?

If you install the wrong one, it might cause leaks and the coolant can bypass the thermostat completely, preventing the engine warming properly.

HD-Parts has sold thousands of thermostats without manufacturing errors or incorrect temperatures.

Straight side thermostat in curved housing:

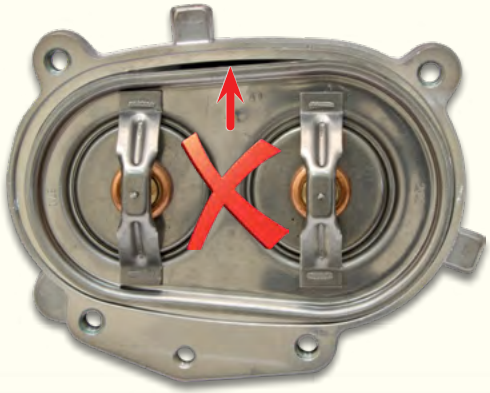

Curved side thermostat in curved housing:

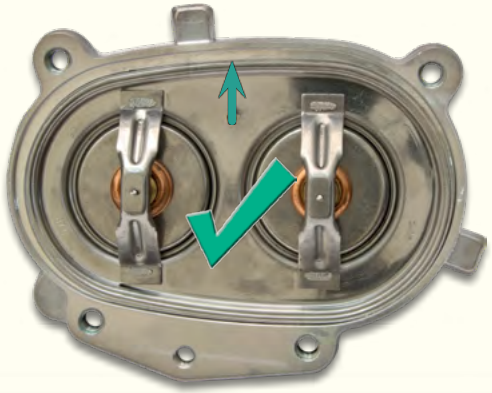

THERMOSTAT DIFFERENCES

302410

Roller

ScR

2129402
2089431
1860734
1734903

Ø 74 mm
38,5 mm

Koyo

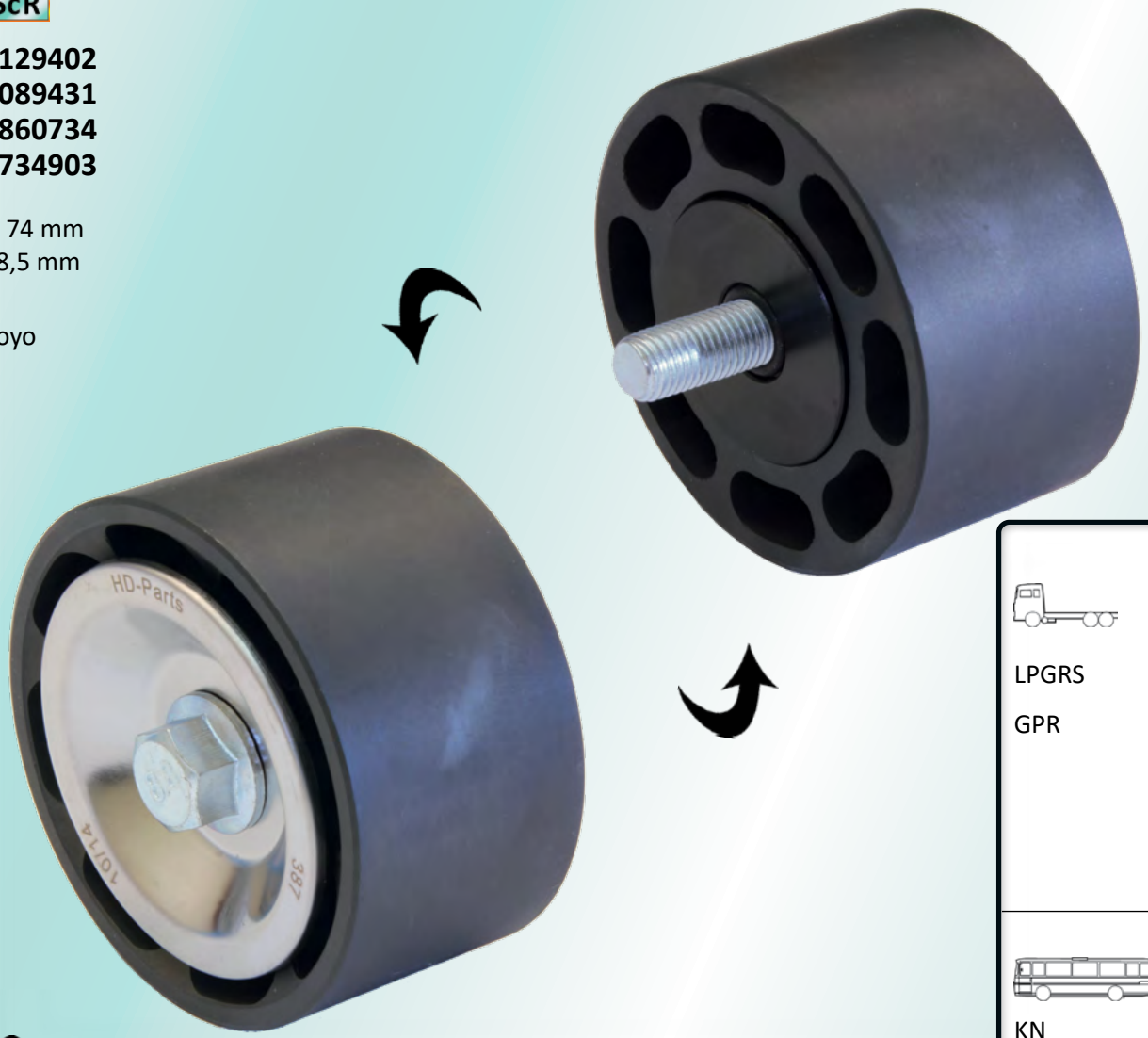

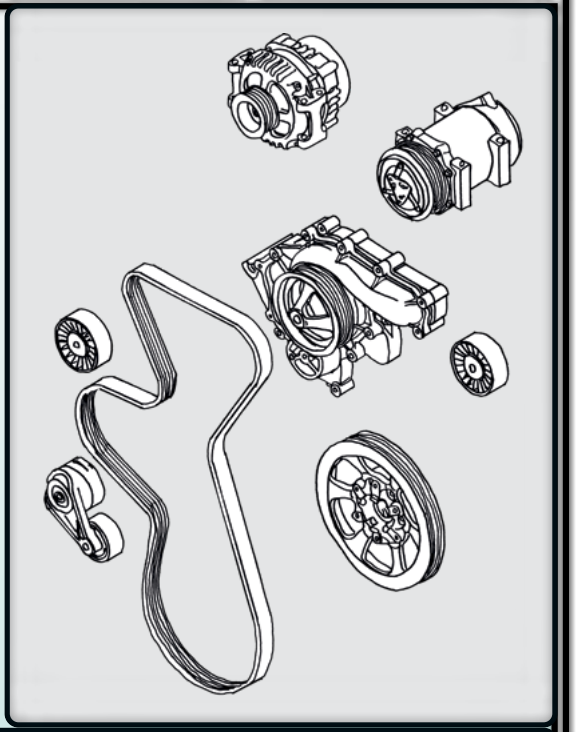

LPGRS	9, 3, 16		08/2016→		
GPR	9	-		1,25:1	
	13	6765070→	8215991→	-	
	13	6765070→	8215991→	1,25:1	1,4:1
	16 XPI	→1115096	with EGR		1,22:1
	16 XPI	1102635→		-	
	16 XPI	with EGR			-

KN	9 + 9 XPI			
K	13	6765088→	8215991→	-

kg 0,71

302412

Roller

ScR

2129404
1860733
1734901

Material: Metal
Материал: Металл

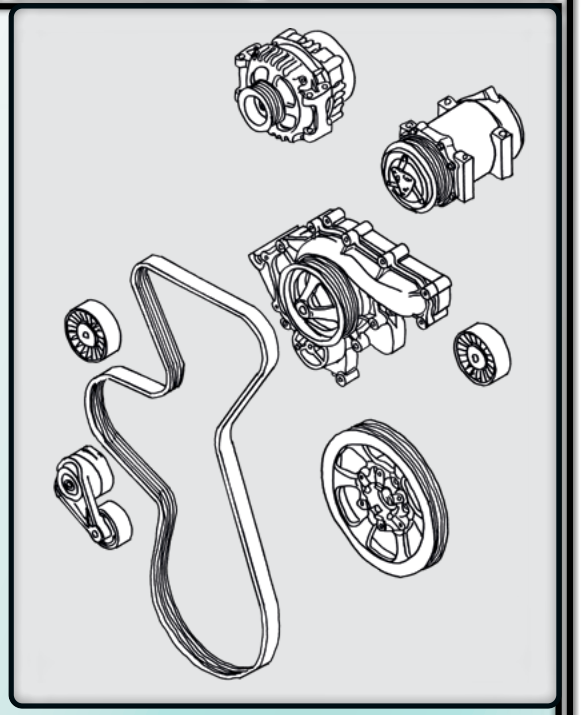

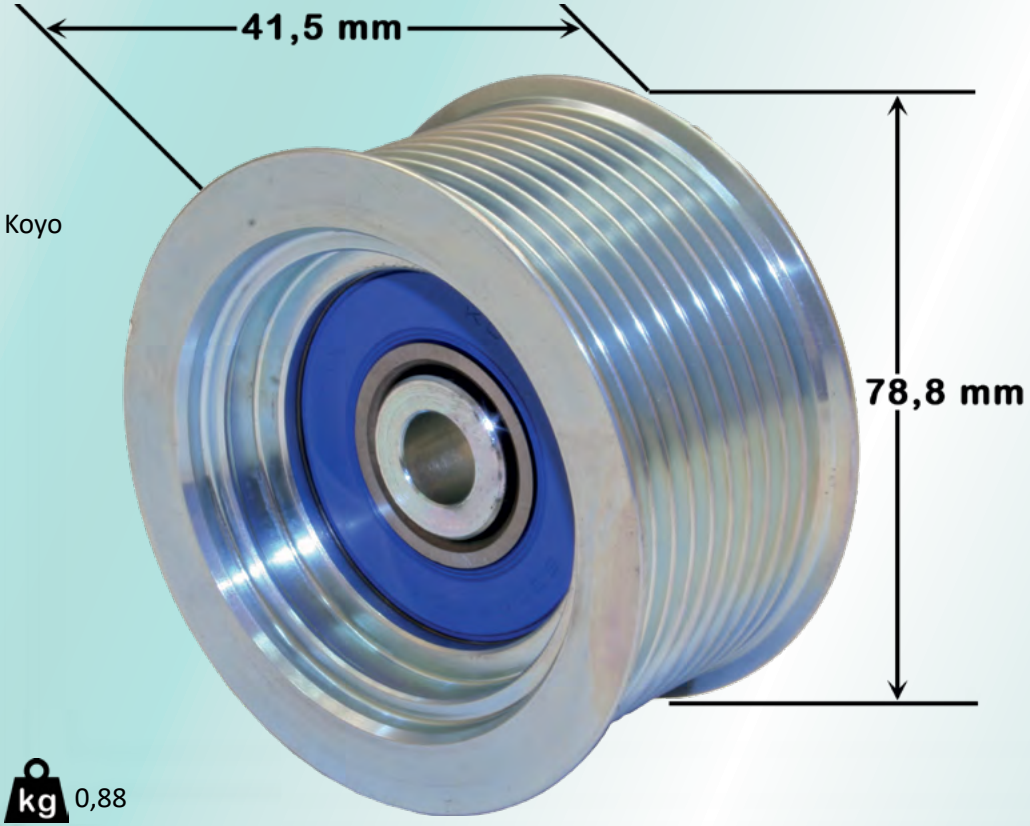

Koyo

kg 0,88

LPGR	9					
PGRS	13, 16 XPI					
GP	9	6765070→		with and without AC	-	
GPR	13	6765070→	8215991→	with AC	1,25:1	1,4:1
GPR	13	6765070→		without AC	1:1	
R	16 XPI	→1115096	with EGR,	with AC	1,22:1	
R	16 XPI		with EGR,	without AC		

302420

Roller

ScR

1514086
1428940
1353717

Material: Plastic

Ø 95 mm
↔ 32 mm



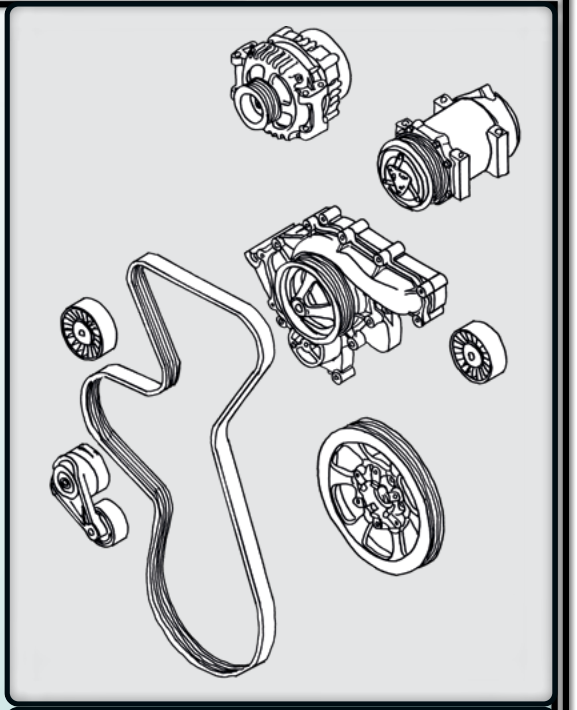

R 16

114, 124, 144, 164

94 L N
114 K
124 K

kg 0,37

302421

Roller

ScR

1858885
1795775
1512749
1510697

Material: Plastic

Ø 74 mm
↔ 32 mm

Koyo





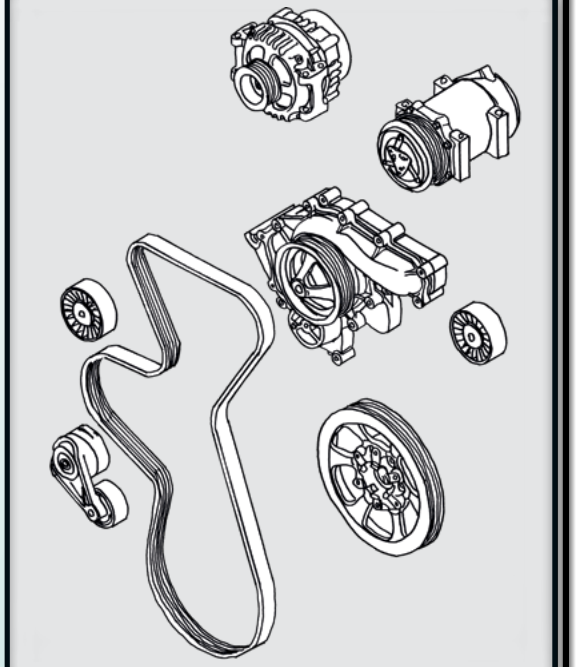

GPR 9, 11, 12 1:1 1,4:1

114, 124

KN

x 2 100 / 150 A

kg 0,37

1 - 2 /

302422

Roller

ScR

1514087
1428941
1413609

Material: Plastic

Ø 100 mm
↔ 34 mm



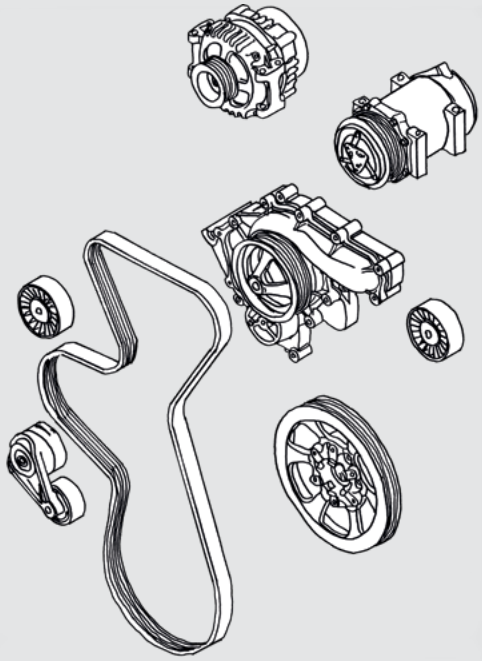

AC

R 16 04/2004 - 2018

114, 124, 164

94 K L N

0,38

302423

Roller

ScR

1858884
1795774
1510698

Material: Plastic

Ø 80 mm
↔ 34 mm

Koyo





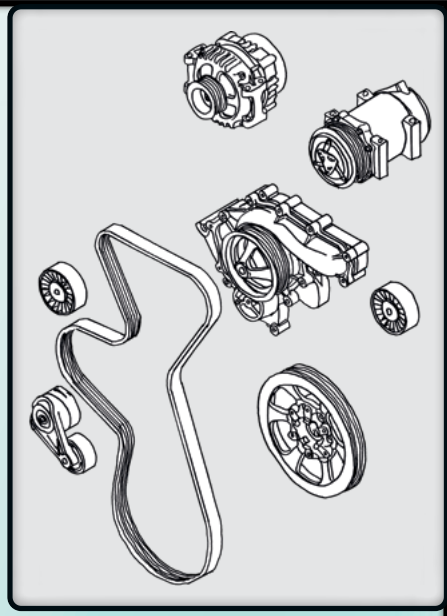

GPR	9 PDE, 11, 12	with and without AC	1:1
GPR	9, 11, 12	with AC	1,4:1

KN x 2 100 A

kg 0,38

302428

Belt tensioner

Koyo

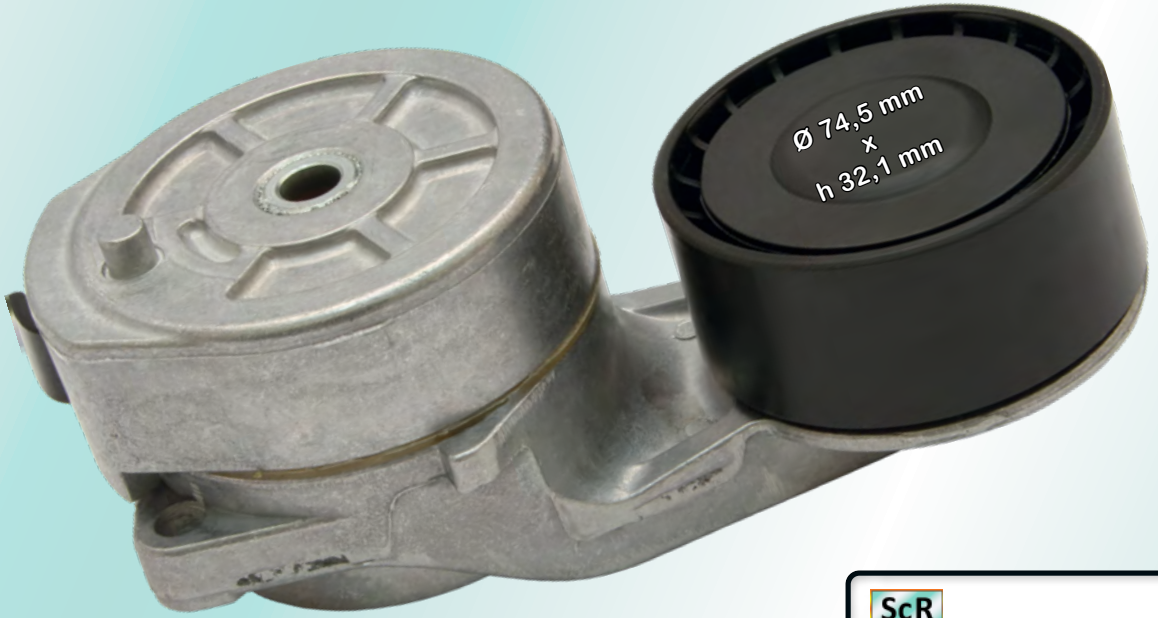

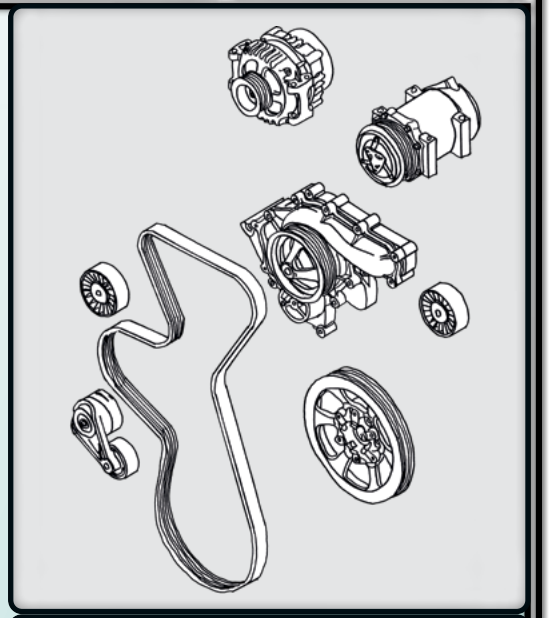

kg 1,48

ScR

2197003
1859655
1774652
1545983
1503114
1476395
1459981

164 1994 - 2008

R 16

ScR

2197002
1859654
1774651
1545982
1503113
1493670
1459988
1371788

114, 124, 144 1994 - 2008

94, 114, 124 1994 - 2010

302429

Belt tensioner

ScR

2197005 → 3,6 mm Spring
1859657 → 3,3 mm Spring
1774654
1774650
1512181

Koyo



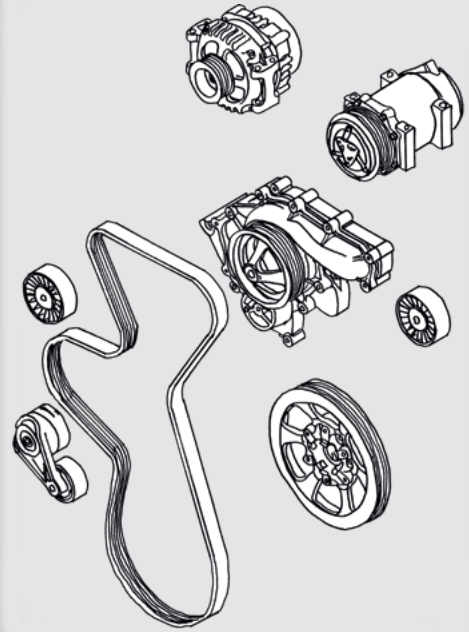

Materials:
Body: Aluminium
Roller: Plastic

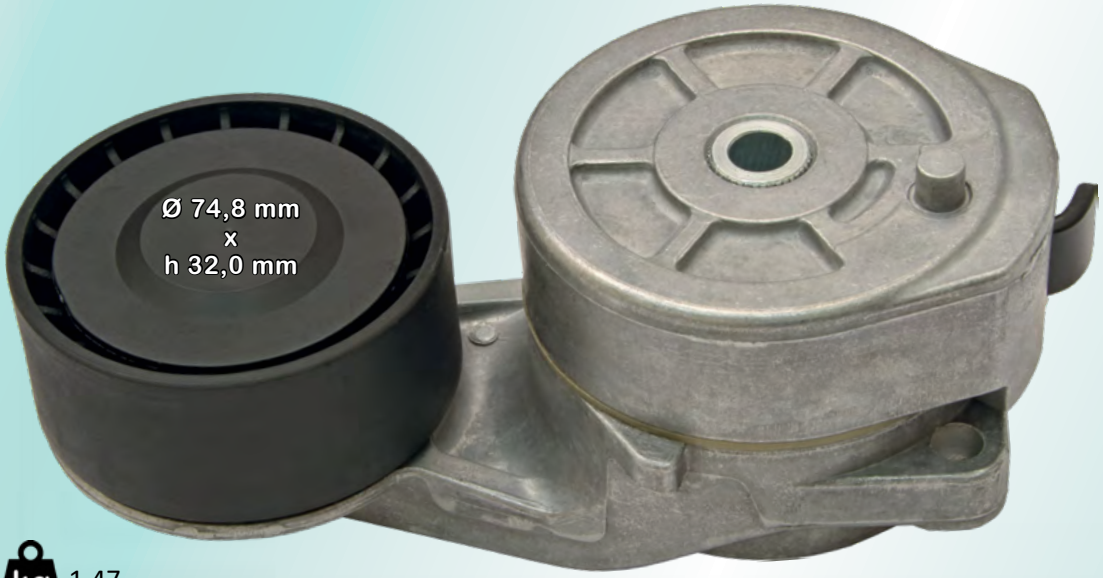

kg 1,47

HD 302429
ScR 2197005
Spring 3,6mm 52 +/-5kp

HD 302432 (Obsolete)
ScR 1859657
Spring 3,3mm 33 +/-4kp





GPR	9 PDE, 11, 12	1,0:1
GPR	9, 11, 12	1,4:1
94		

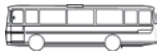

KN

302435

Belt tensioner

ScR

2197391
2192038
1870553
1779757

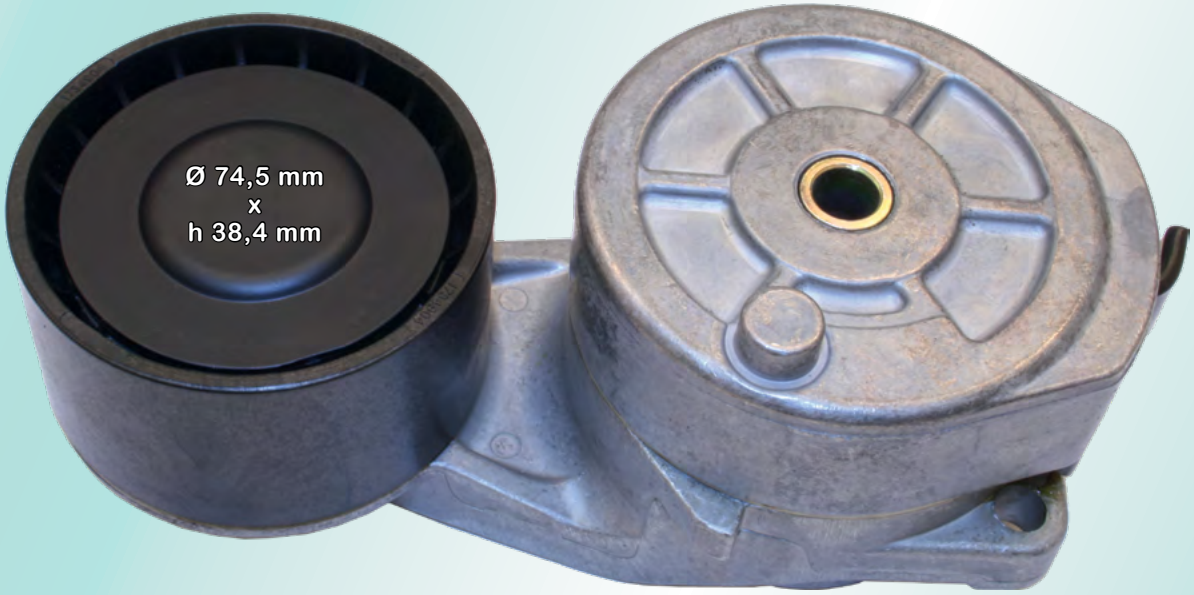

kg 1,52

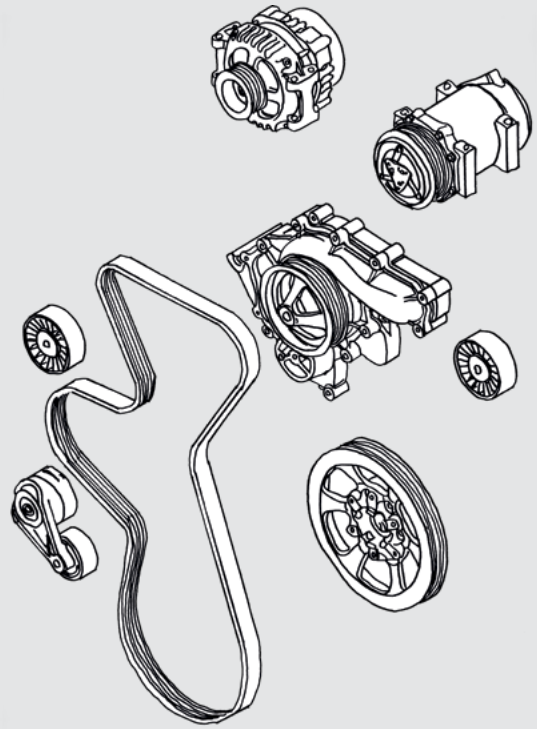

GP	9	-
GPR	13	1:1
2004 - 2018		

KN	9, 13	2004 →

303308

Cover → Fuel filter housing



ScR **1429057**

Reference numbers:

DT	**112285**
Sampa	**043125**
Auger	**80218**
Casals	**95317**
Orex	**590001**



kg ?

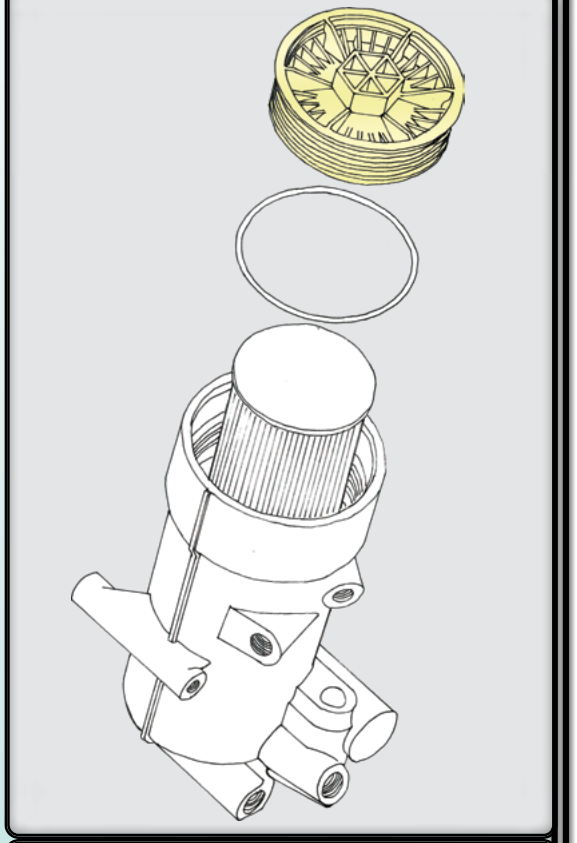

LPGRS	08/2016 →
GPR	04/2004 - 2018
94 - 164	06/1995 - 12/2004

KN	11/2005 →

303309

Cover → Double fuel filter

ScR

2052855
2045780

Material: Plastic



kg 0,19

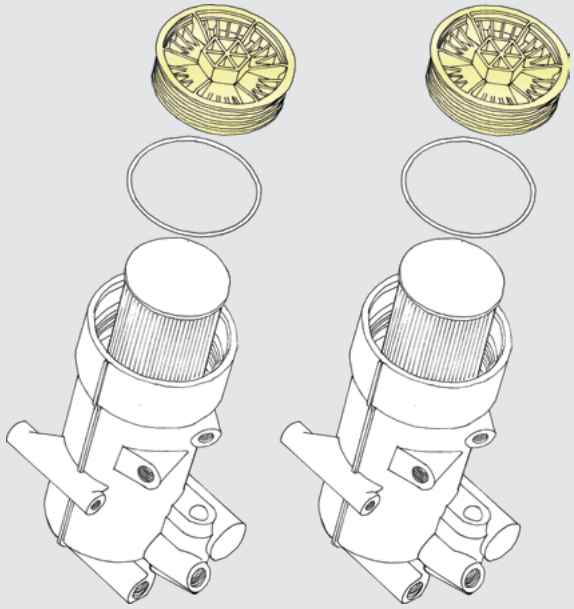

303310

Cover → Double fuel filter

ScR

1729659

Material: Plastic



kg 0,19

XPI Extreme high pressure injection

LPGRS	08/2016 →	9 / 13 / 16
GPR	2004 - 2018	9 / 13 / 16

KN	2004 →	9 / 13

303632

Clamp band kit → Cylindrical fuel tank

ScR

2224543 1783035
2354642 1783034

This kit is HD´s own creation.
Reference numbers are for individual parts.

Material:
- Steel
- Rubber



kg 2,51

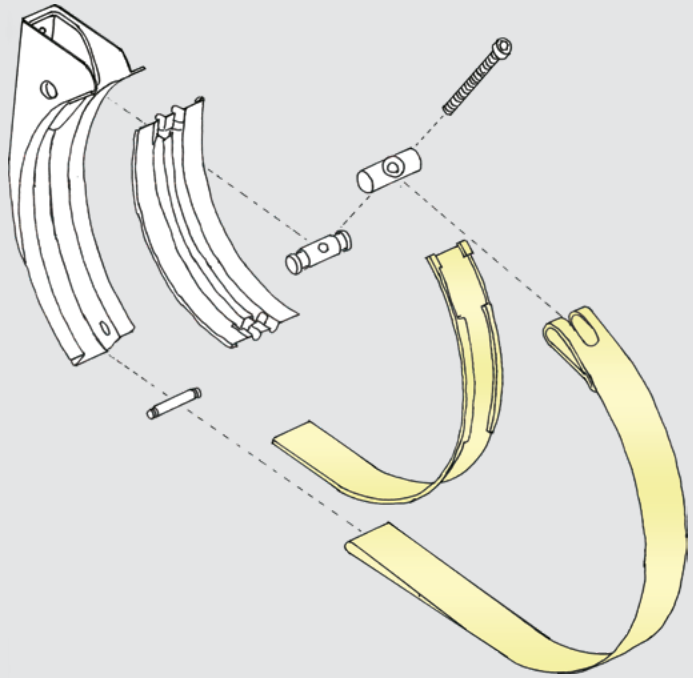

LPGRS	2016 →
GPR	2003 - 2018

3 kit → tank

303630

Fastening kit → Cylindrical fuel tank

ScR

1783036
1783037
2173774 1783039
2353054 1783038

This kit is HD´s own creation.
Reference numbers are for individual parts.

Material: Steel

Length: 75 mm
Ø 25,4 mm
Hole: Ø 14,5



Length: 106 mm
Ø 25/30 mm
Hole: Ø 14



Length: 106 mm
Ø 13/16 mm



Length: 140 mm
M14 x 2 mm



kg 1,11

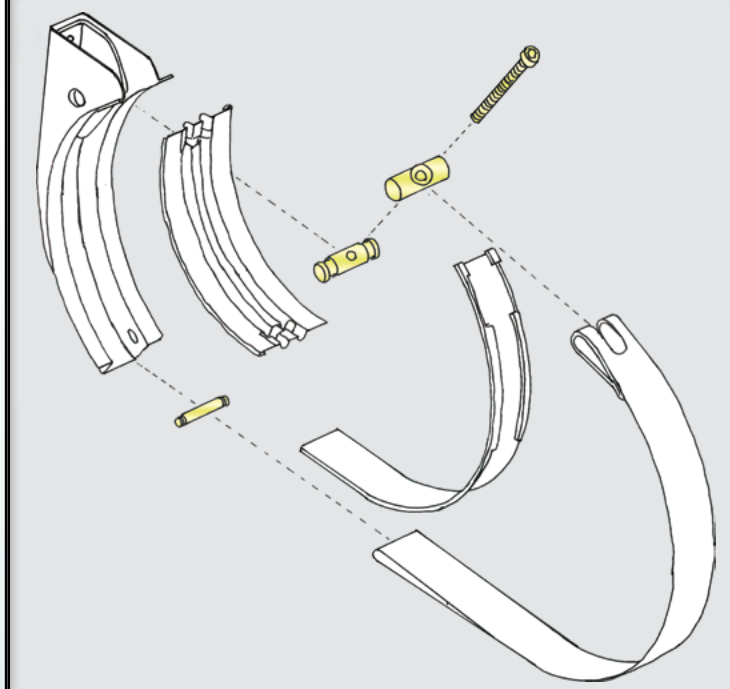

LPGRS	2016 →
GPR	2003 - 2018

3 kit → tank

303634

Fastening kit → General or Wide fuel tanks

ScR

1 x **1398639** 1356958
1 x **1398640** 1356959
2 x **1899302** 1433899 1356957
1 x **1750857** 1398645

This kit is HD´s own creation.
Reference numbers are for individual parts.

Material: Steel

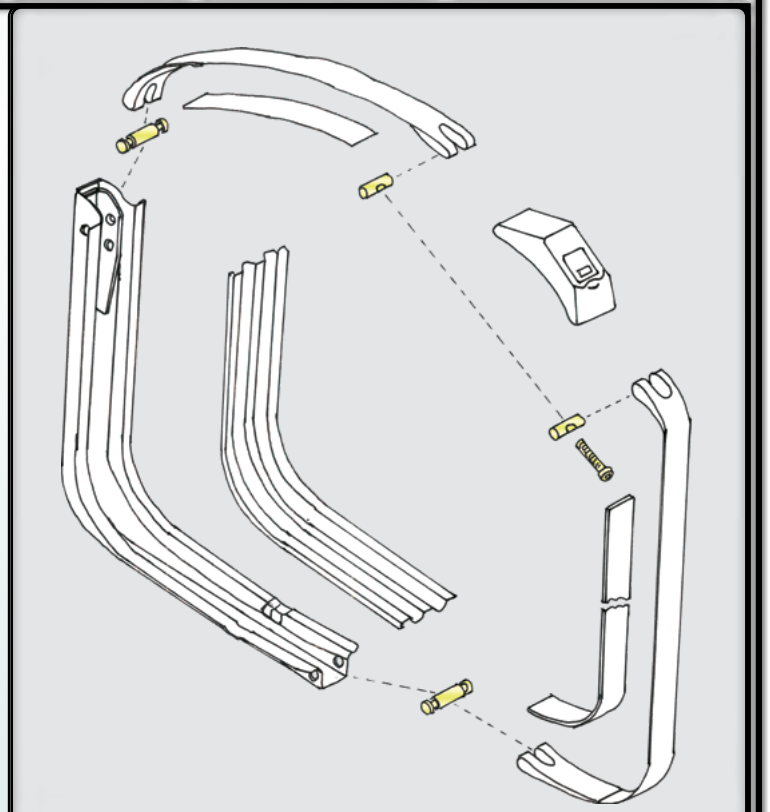



kg 0,48

LPGRS	2016 →
GPR	2003 - 2018
94 - 164	1994 - 2008

KN	2004 →
94, 114, 124	1997 →

303635

Fastening kit → SCR liquid tank

ScR

149102
1398639 1356958
1398640 1356959
1750857 1398645
1770451

This kit is HD´s own creation.
Reference numbers are for individual parts.

Material: Steel

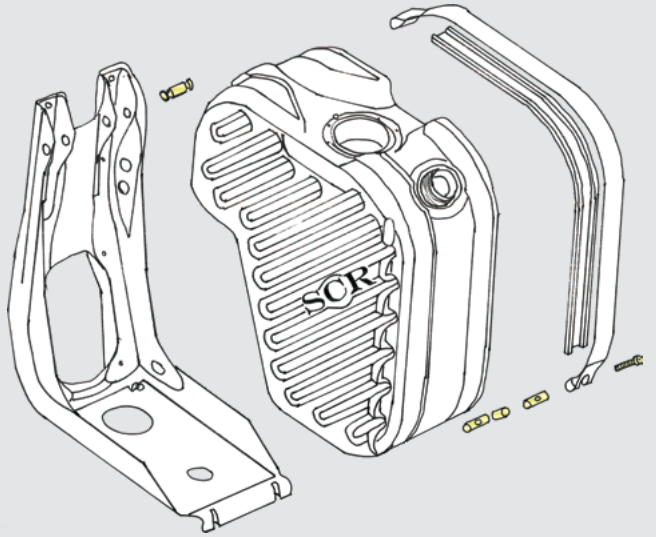

Length: 50 mm
Ø 18 mm
M10 x 1,5 mm



18 x 10 mm
Ø 10,5 mm



Length: 50 mm
Ø 18 mm
Hole: Ø 10,5 mm



Length: 66 mm
Ø 14/18 mm



Length: 85 mm
M10 x 1,5 mm



kg 0,35

GPR	2003 - 2018
94 - 164	1994 - 2010

KN	2004 →
94, 114, 124	1997 - 2010

2 kit → tank

303522

Bracket → Exhaust silencer

ScR

1741487
1544117

Material:
Painted steel

3 x nut threads:
M14 x 2,0 mm



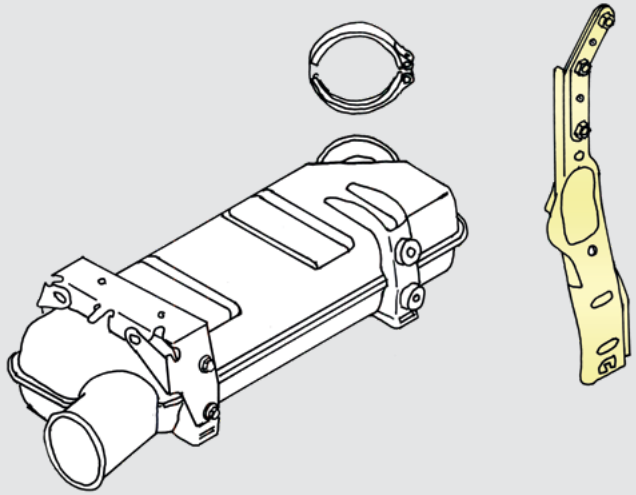

GPR 04/2004 - 2018

kg 2,39

303524

Bracket → cubical exhaust silencer

VoR

1546009
1421510
1394204
1384061
1344149



Material: Steel

kg 1,24

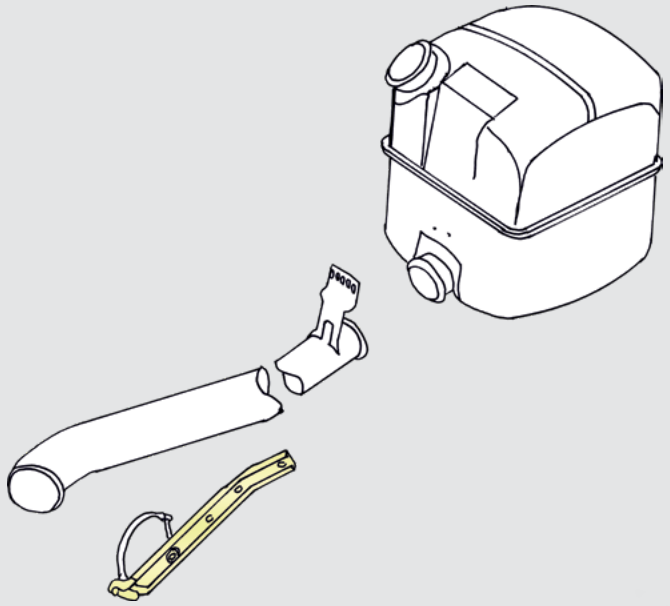

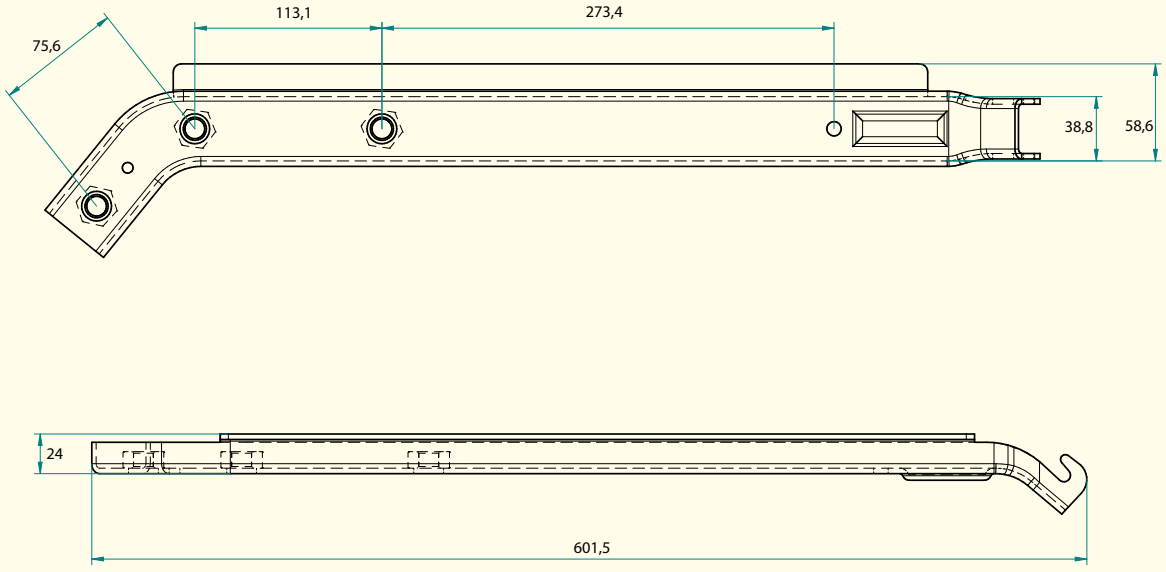

GPR	→ 07/2005
94 - 164	1994 - 2008

VoR Clamp (not included)

1514959
1421511
1344150

303304

Cap for fuel tank

ScR

Includes 1 cap with 2 identical keys:
Содержат 1 крышку и 2 идентичных ключа:

2276408
2123147
2061500
1481301
1432187
1402004
1369849

ScR

Includes 2 caps with 2 identical keys:
Содержат 2 крышки и 2 идентичных ключа:

2278298
2123149
2061505
1500308



Ei ilmaventtiiliä
No air valve
Без воздушного клапана

kg 0,31



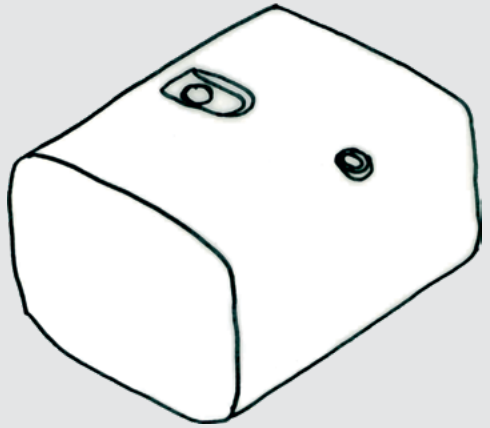

GPR 04/2004 - 2018
94 - 164 1995 → 12/2004

94, 114, 124 1994 - 2010

304000

Clutch fork, complete

ScR

1773621
1737306
1545625
1479577



← Plastic ball cup ScR **1468438**

kg 4,25

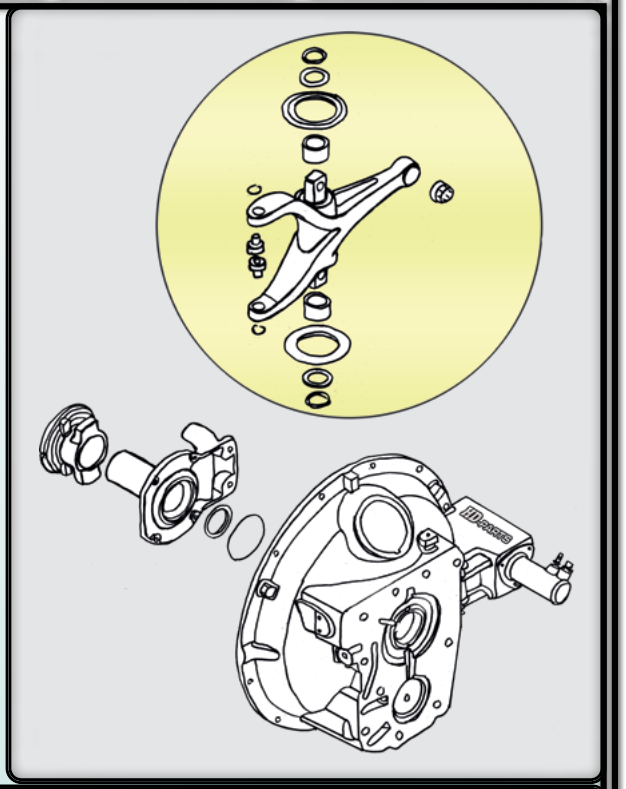

LPGRS Hybrid	08/2016→	875, 895, 905, 925		
GPR Hybrid	2004 - 2018	801, 890, 900, 920 875, 895, 905, 925		
94 - 164	1994 - 2008	801, 890, 900, 920	K432	30/31/32/33/34

KN Hybrid	2004→	801, 890, 900, 875, 895		
94, 114, 124	1994 - 2010	801	K432	30/31/32/33/34

304006

Press roll pair



ScR Press roll

1753479 x 2
1335485

INAR F202
F-202909

ScR Lock ring

804772 x 2

16 x 1,0 x 23,8 mm
DIN 471

kg 0,26

These press rollers are also included in axle kit 304002

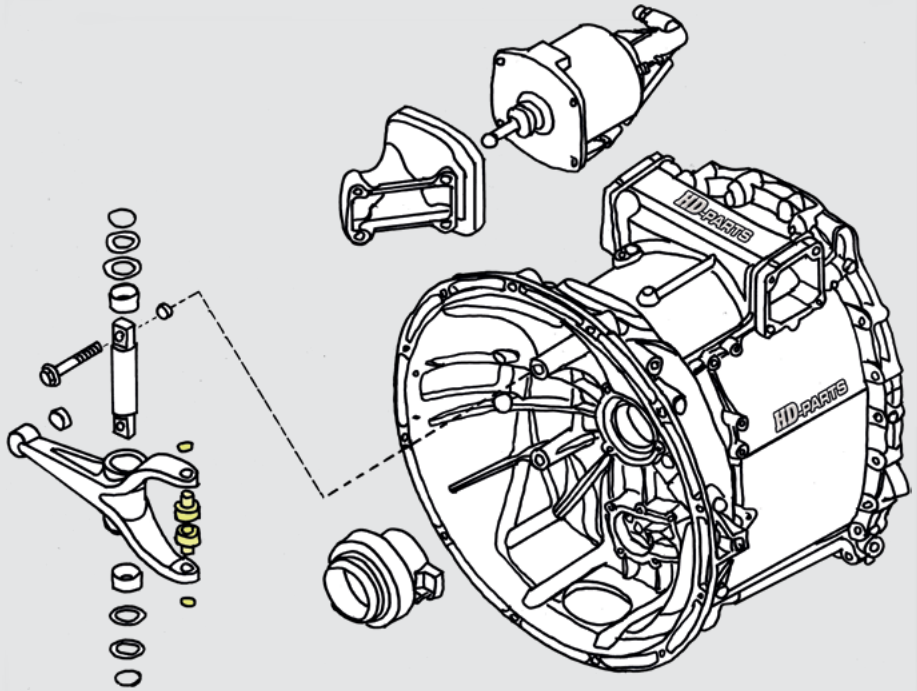

LPGRS	08/2016→		
GPR	2004 - 2018		
94 - 164	1994 - 2008	K432	30/31/32/33/34

KN	2004→		
94, 114, 124	1994 - 2010	K432	30/31/32/33/34

304002

Axle kit

ScR 2258072 +

HD - extra parts 1737307 + 1468438

ScR 1468438



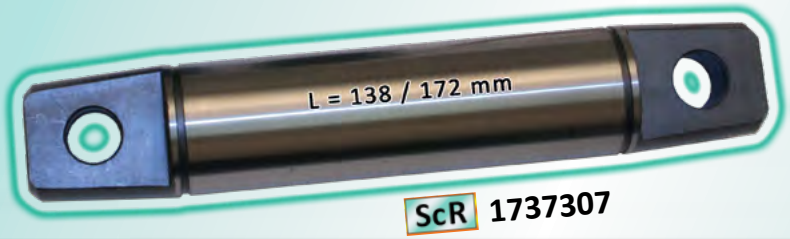

ScR 1737307

kg 1,1

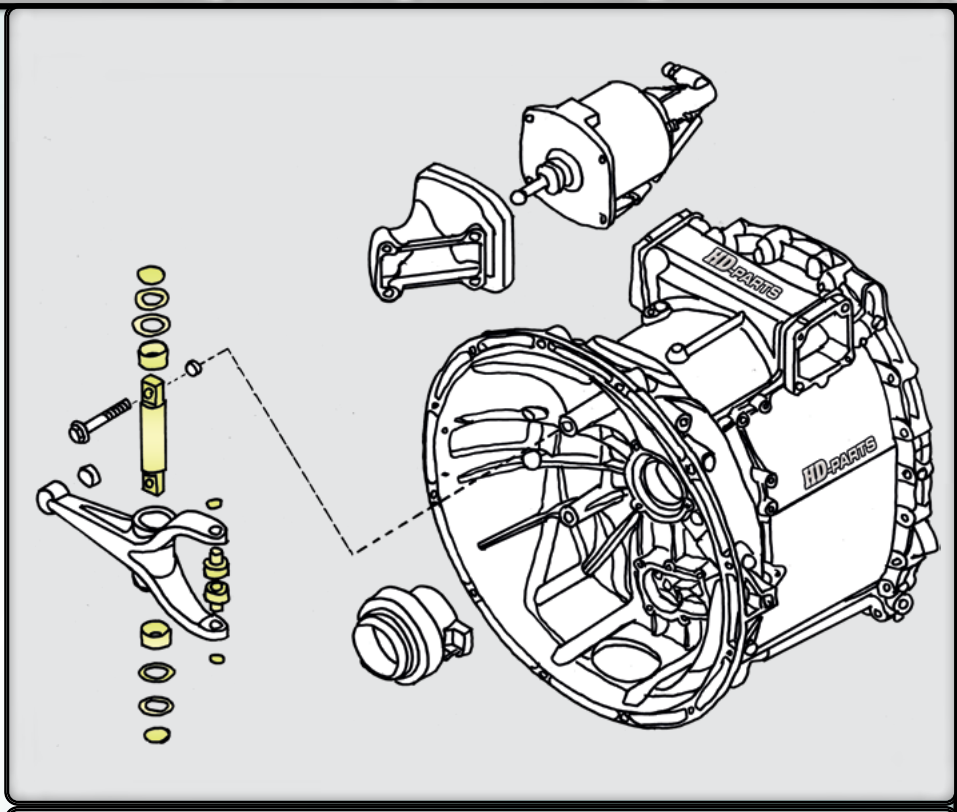

LPGRS	08/2016→		
GPR	2004 - 2018		
94 - 164	1994 - 2008	K432	30/31/32/33/34

KN	2004→		
94, 114, 124	1994 - 2010	K432	30/31/32/33/34

304008

Clutch cylinder

ScR

1754943
1545626
1506121



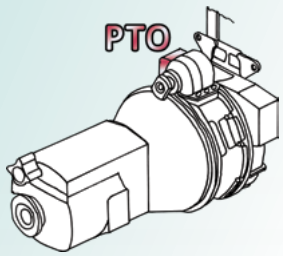

PTO = Power take off

With power take off, the longer push rod must be taken from the old cylinder.

При наличии отбора мощности, выжимающая тяга должна быть установлена от старого цилиндра

kg 0,81

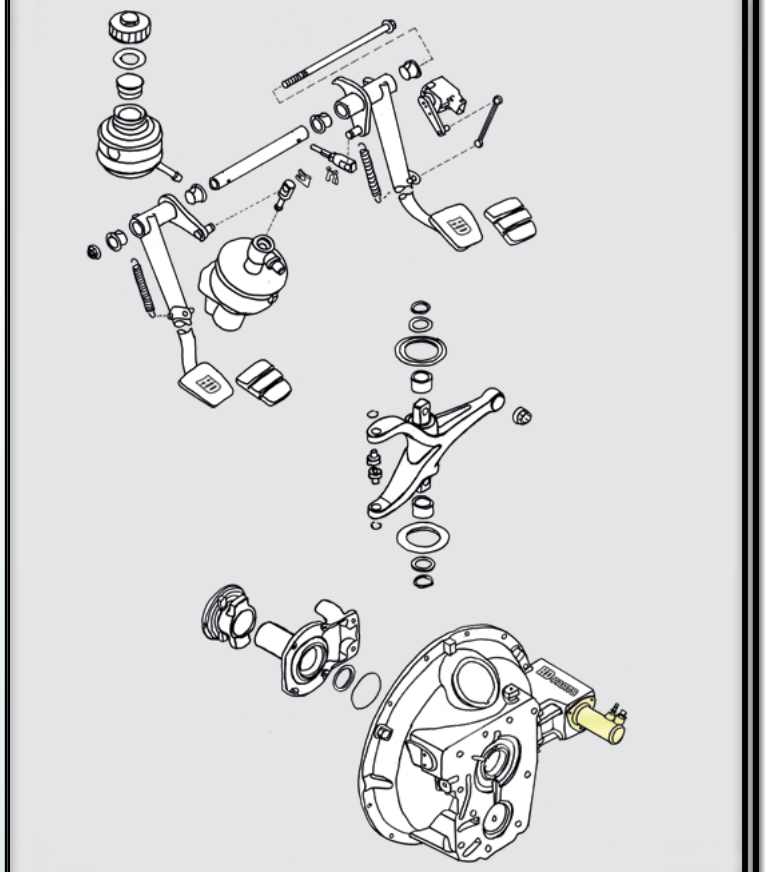

	→10/2006	
PR	801, 890, 900, 920	
94-164	K432-30/31/32/33/34	

	→10/2006	
KN	875, 895	
94, 114, 124	K432-30/31/32/33/34	

304010

Clutch cylinder

ScR

1927829
1800442
1523400



kg 0,61

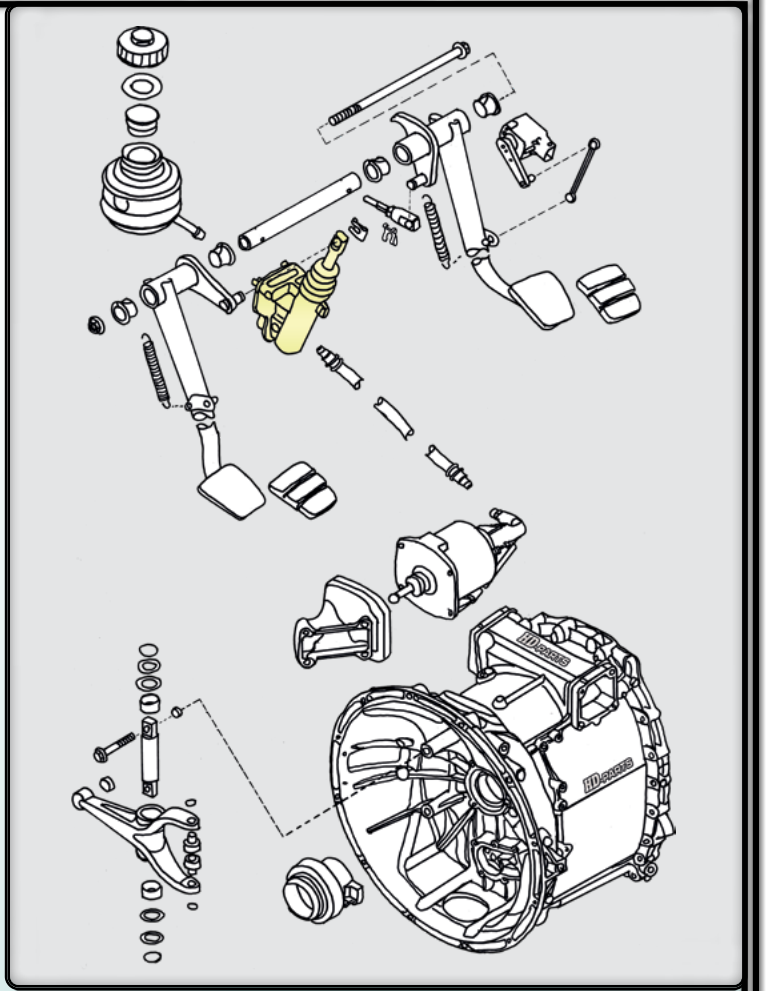

GPR	875, 895, 905, 925	01/2006 - 2018
KN	875, 895	01/2006→

305502

Cassette oil seal

ScR

1502384
1393331
1380160



kg 0,11



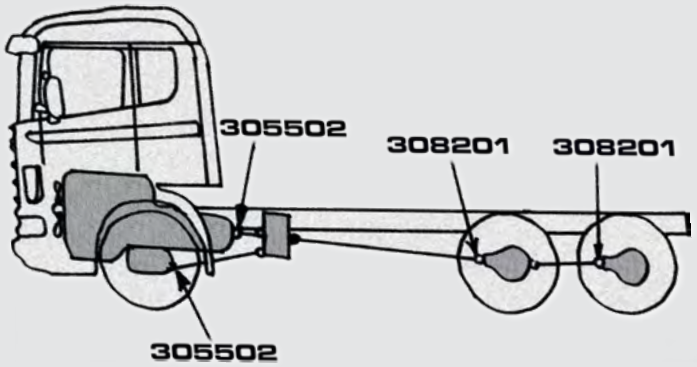

308201

Cassette oil seal

ScR

1502385
1386594
1383129

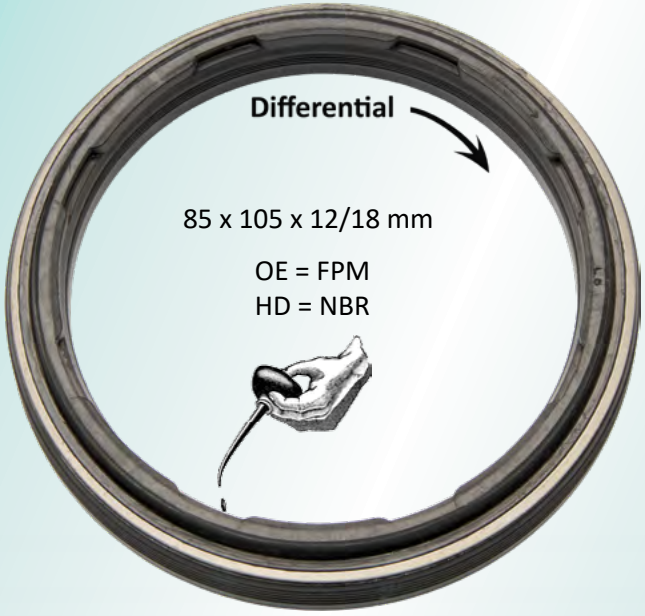

kg 0,11

LPGRS	08/2016→
GPR	2004 - 2018
94 - 164	1994 - 2008

KN	2004→
94, 114, 124	1994 - 2010

305751

Joint

ScR

1384897
371451

VoR

1696684

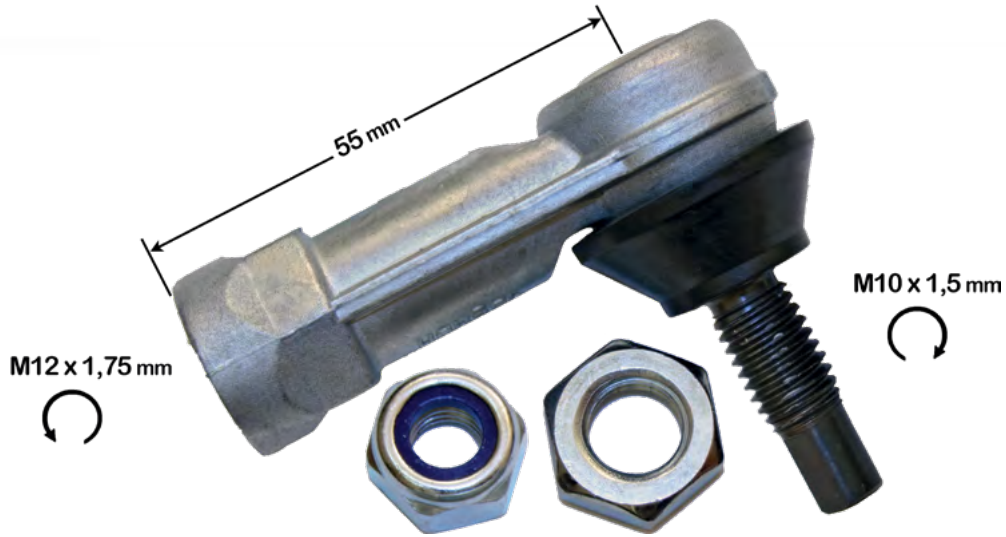

kg 0,14

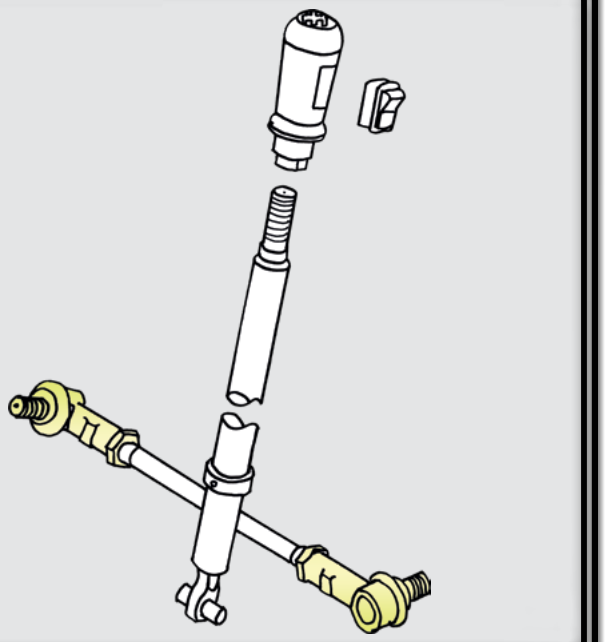

305752

Joint

ScR

1384898
371452

VoR

1696685

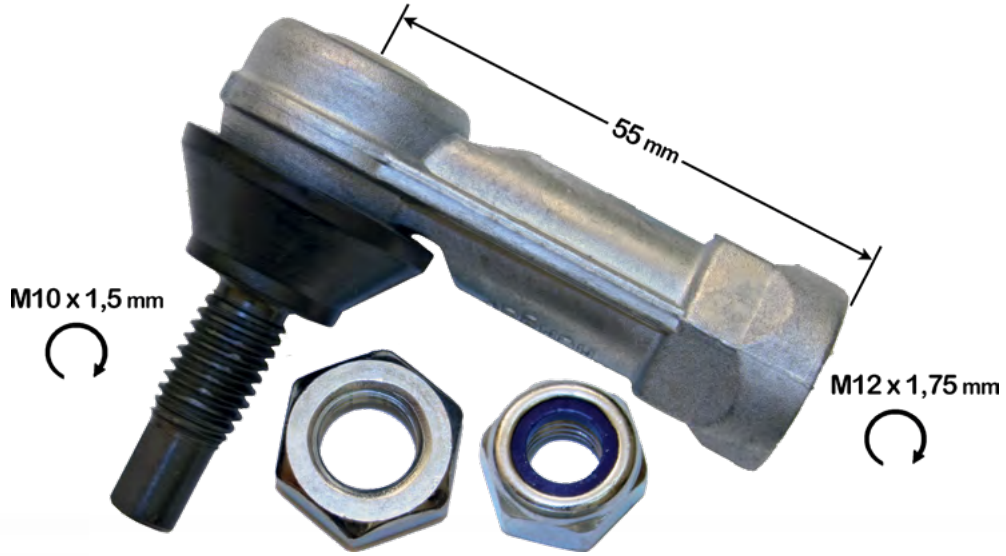

kg 0,14

GPR	2004 - 2018
94 - 164	1994 - 2008

KN	2004 →	801
94, 114, 124	1994 - 2010	801

305769

Ball crank assy → Gear linkage control

ScR 1768962

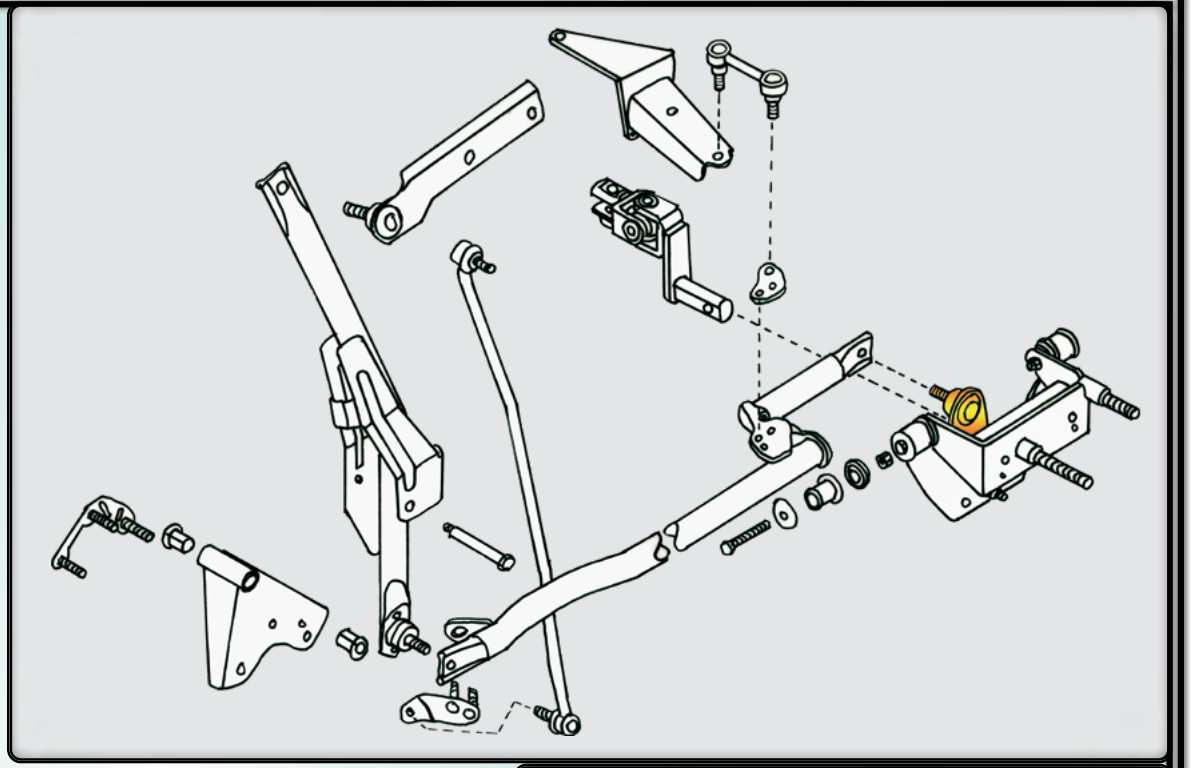



kg 0,59

GPR	875, 895, 905, 925	10/2006 - 2018

305768

Joint

ScR

2237343
1384624
550268 (kit)



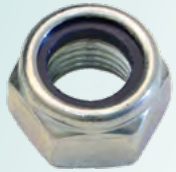



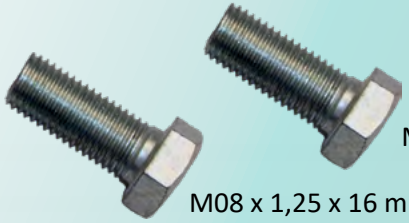

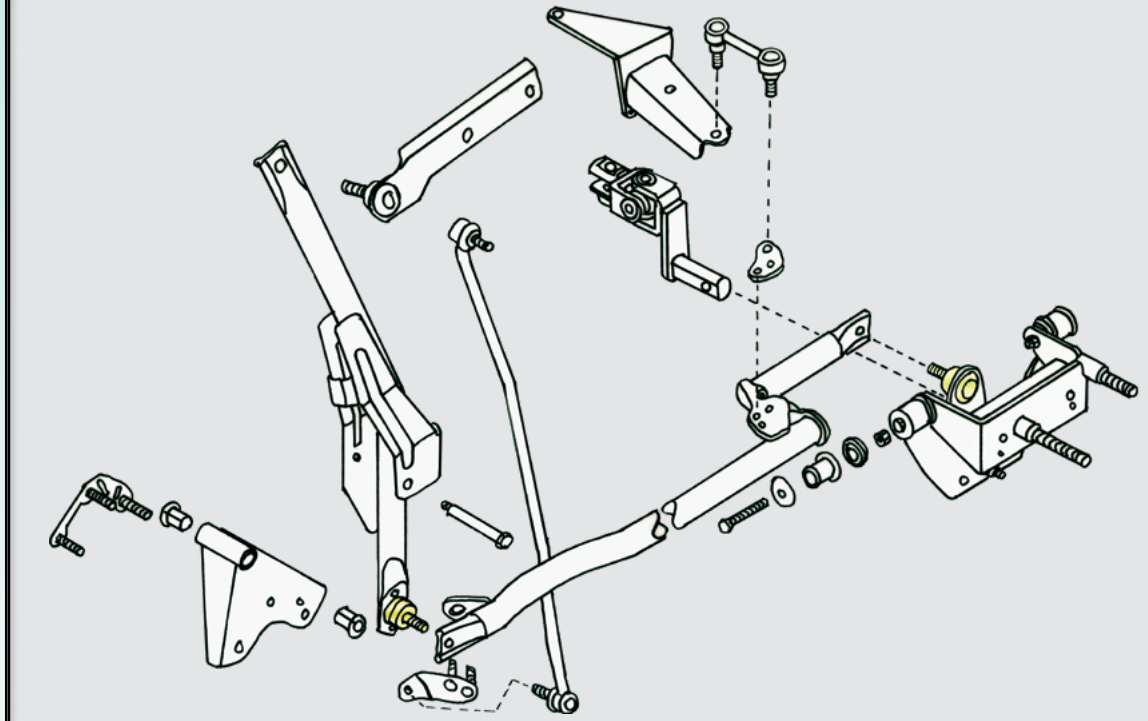

PR	801, 890, 900, 920	→10/2006
GPR	875, 895, 905, 925	10/2006 - 2018
94-164	801, 890, 900, 920	→10/2006

kg 0,18

305759

Joint → Gear box control

ScR **1768958**

Material: Steel



Lubricated

Max length: 172 mm (+/-5mm)
Pin Length: 62,5 mm (+/-1mm)
Pin hole: Ø 12 mm

kg 1,16

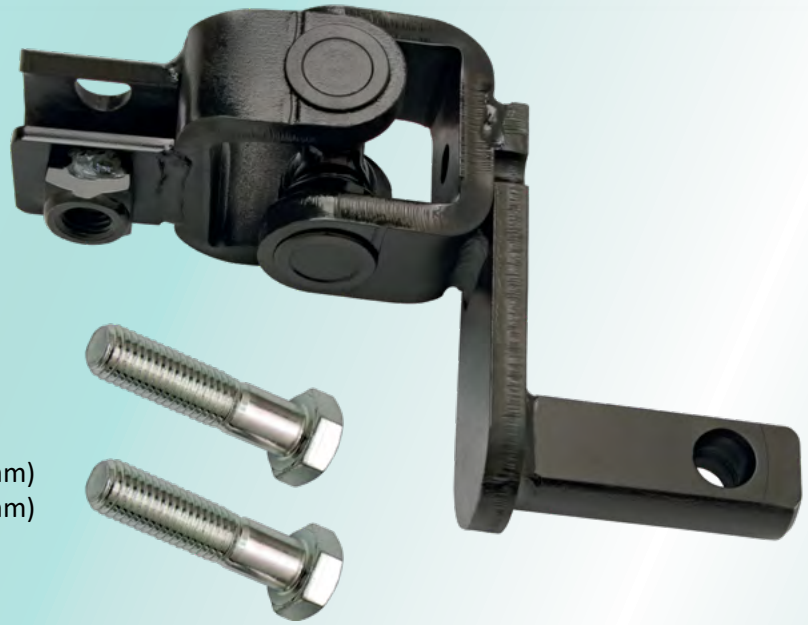

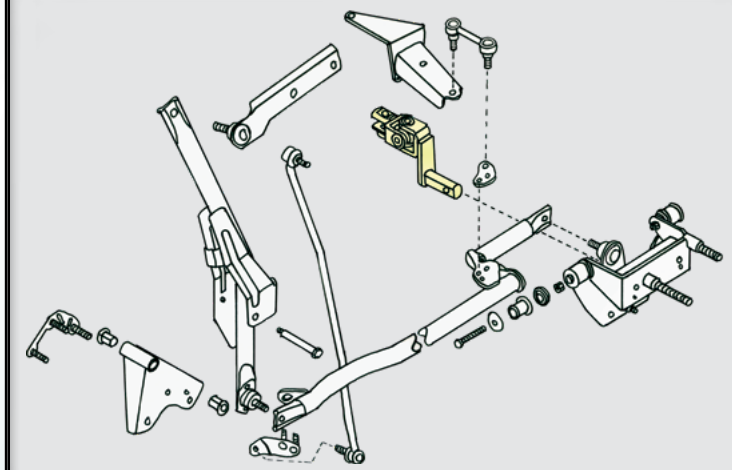

GPR		05/2006 →	875, 895, 905, 925
R	LHD	LHD	
RGP	LHD	LHD	EK PTO (Power take off)
R	RHD	RHD	

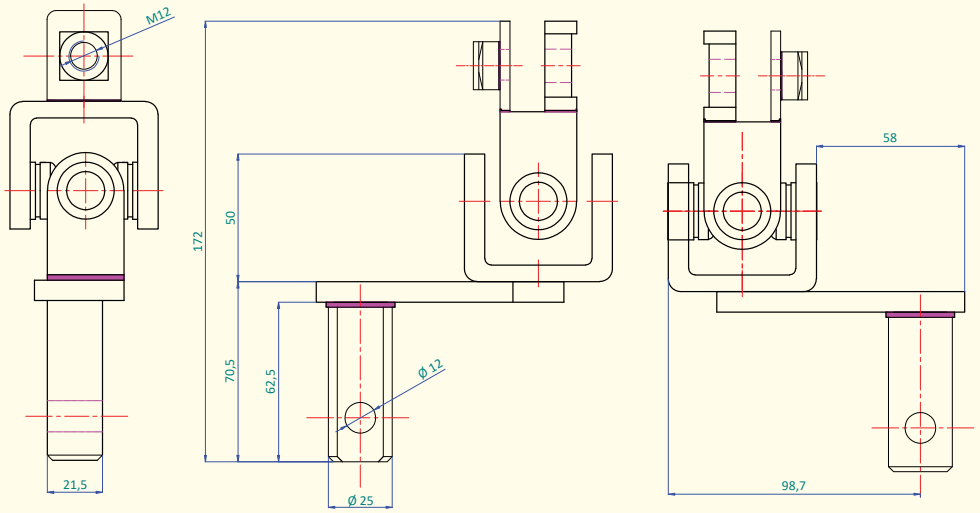

305760

Joint → Gear box control

ScR **1768957**

Material: Steel



Lubricated for life

Max length: 186,5 mm
Pin Length: 67,0 mm
Pin hole: Ø 12 mm

kg 1,14

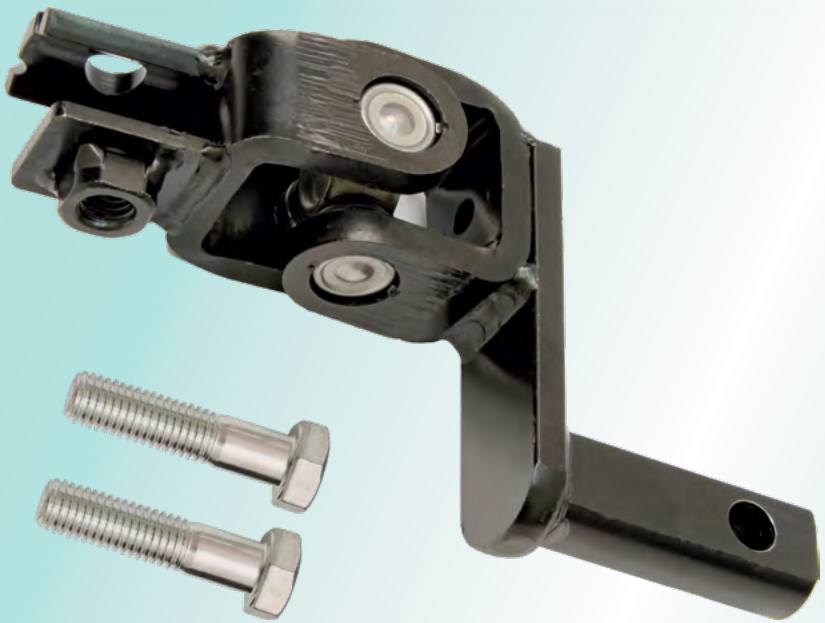

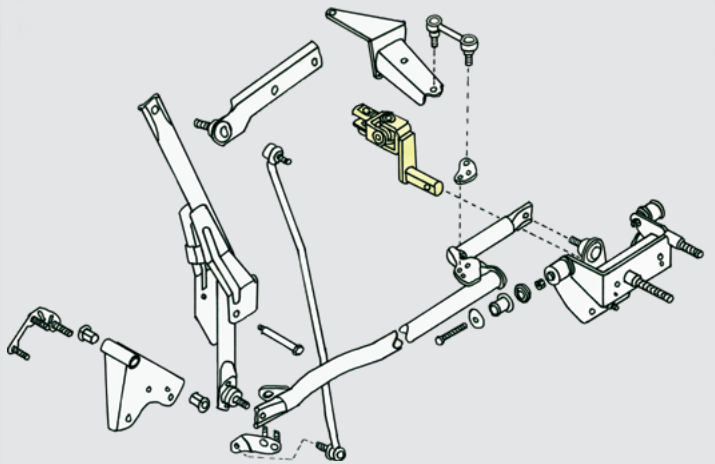

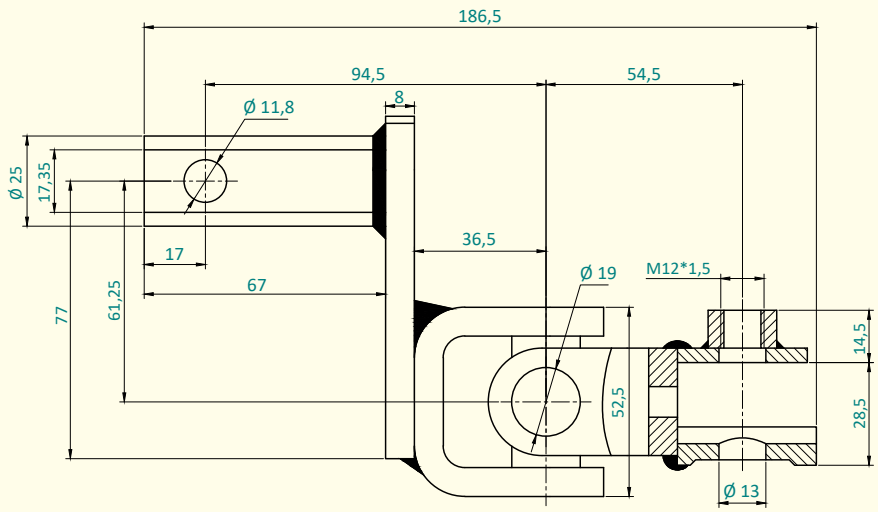

GPR 05/2006 - 2018 875, 895, 905, 925

R LHD

RGP AWD EK PTO (Power take off)

P 1:1 →2044603 →11/2008

P 1,4:1

305754

Intermediate arm

ScR

2147948
1746644

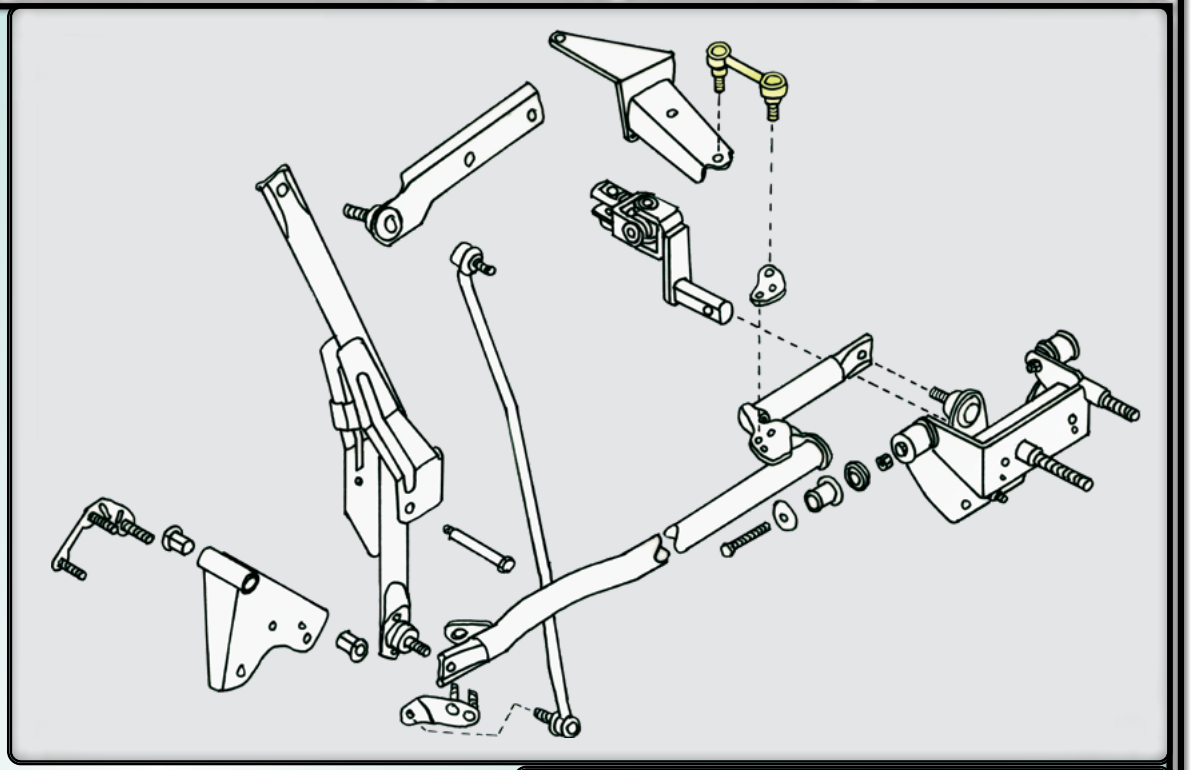

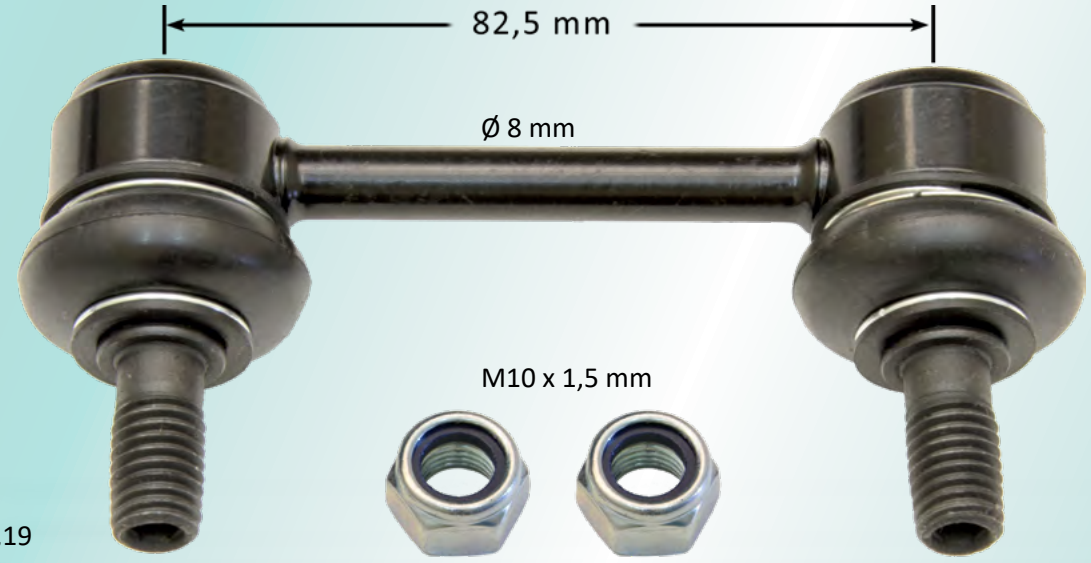

kg 0,19

GPR	875, 895, 905, 925	10/2006 - 2018

306030

Universal joint, lubricated



ScR Lubricated

1111745
345809
337079
337058



ScR Maintenance free

1879537
1765828
1422433

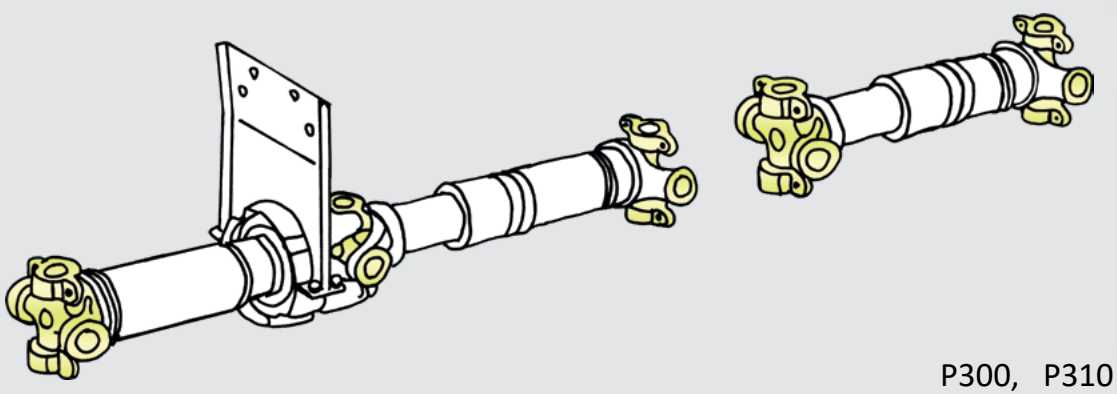

P300, P310

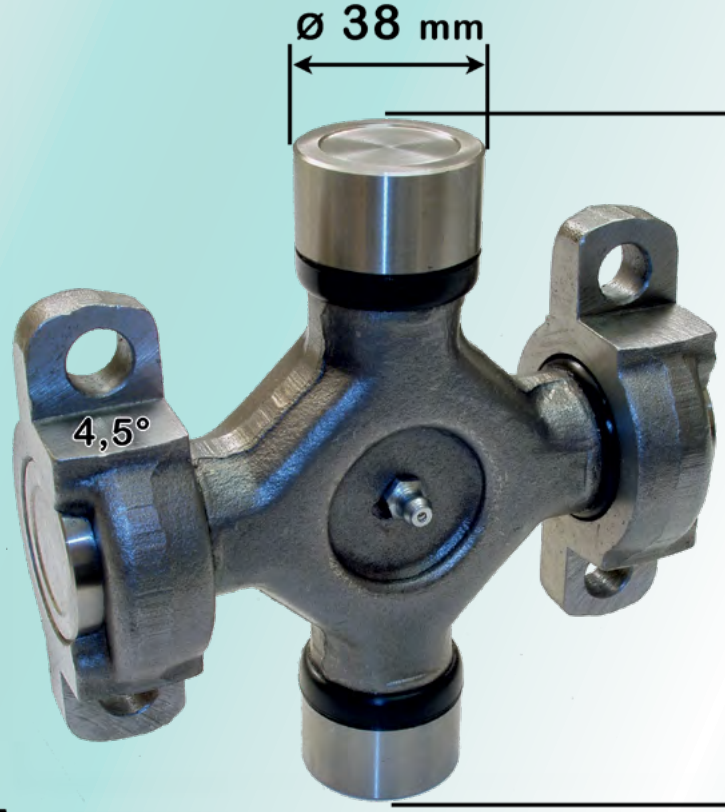

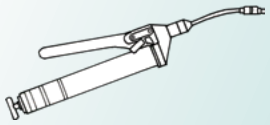



kg 2,71

GPR 2004 - 2018

94 - 164 1994 - 2008

94, 114, 124 1994 - 2010

KN

The exchange of the universal joint and its balance must always be checked in accordance with the vehicle manufacturer's instructions.

Замена крестовины карданного вала и её балансировка всегда должны проверяться в соответствии с инструкциями производителя транспортного средства.

Nivelristin vaihto ja sen tasapaino on tarkistettava aina ajoneuvon valmistajan ohjeiden mukaisesti.

306040

Universal joint, lubricated



ScR Lubricated

2397361
1797424
1766466
1750307
1541070
365901
345810
337080
337059



ScR Maintenance free

2204664
2182977
1879538
1765829
1422436

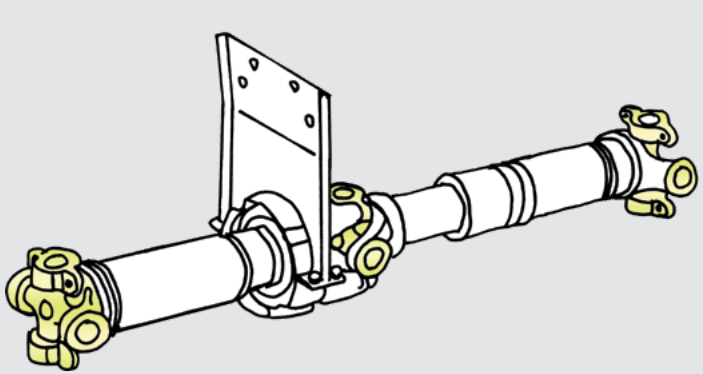

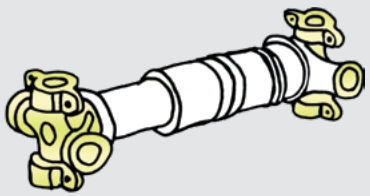

P400, P410, P420, P460

LPGRS	08/2016→	KN	2004 →
GPR	2004 - 2018	94, 114, 124	1994 - 2010
94 - 164	1994 - 2008		

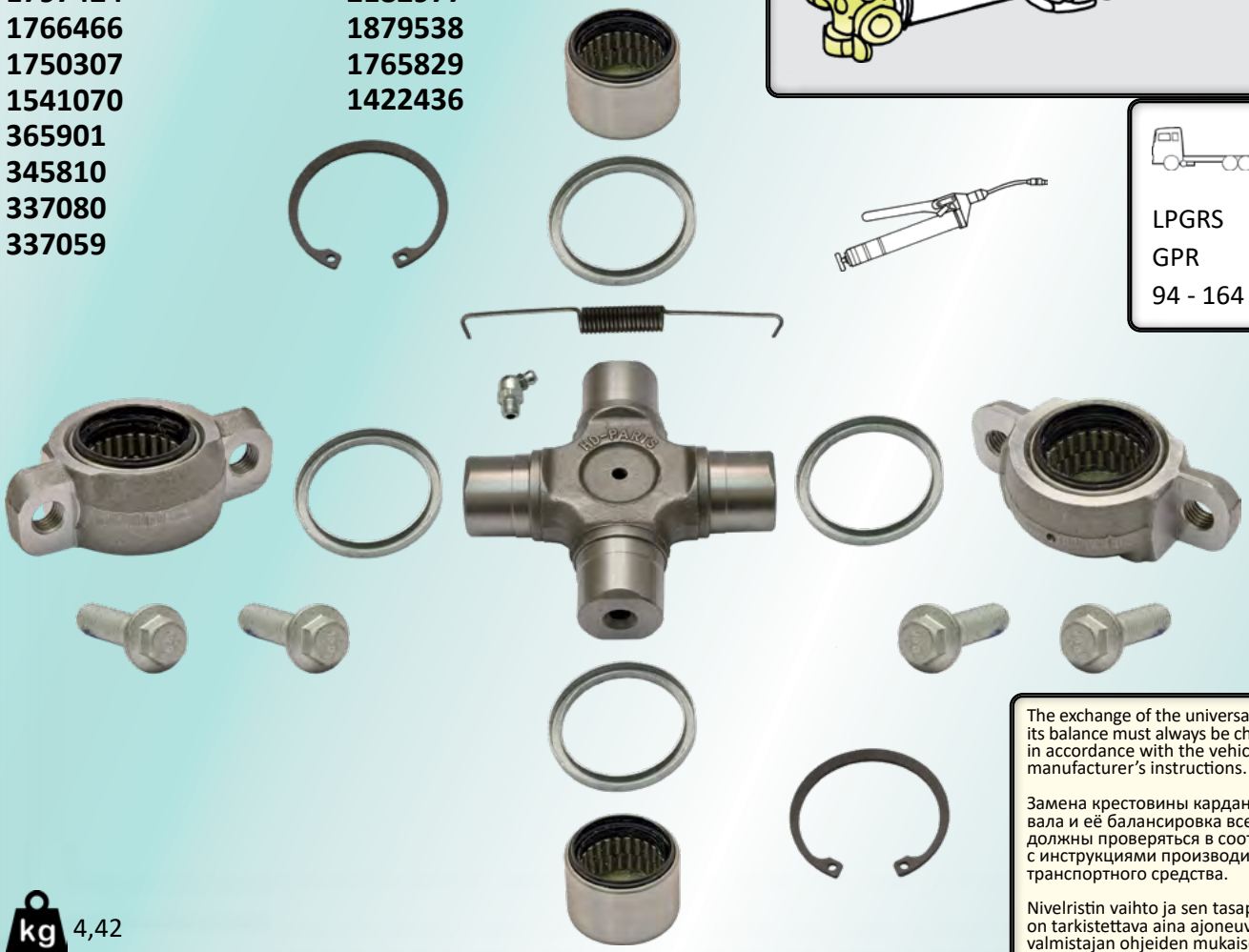

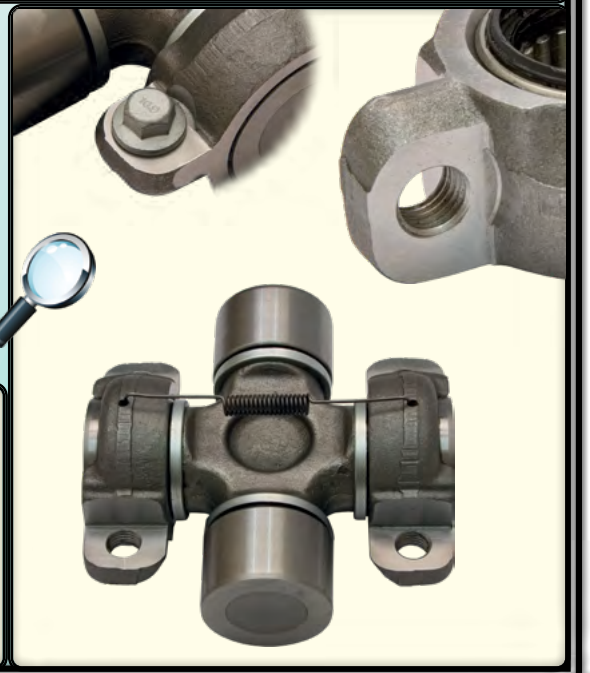

The exchange of the universal joint and its balance must always be checked in accordance with the vehicle manufacturer's instructions.

Замена крестовины карданного вала и её балансировка всегда должны проверяться в соответствии с инструкциями производителя транспортного средства.

Nivelristin vaihto ja sen tasapaino on tarkistettava aina ajoneuvon valmistajan ohjeiden mukaisesti.

kg 4,42

306050

Universal joint, lubricated



ScR Lubricated

2397362
1797425
1766467
1541071
390225
366437
337060



ScR Maintenance free

1879540
1765830
1422439

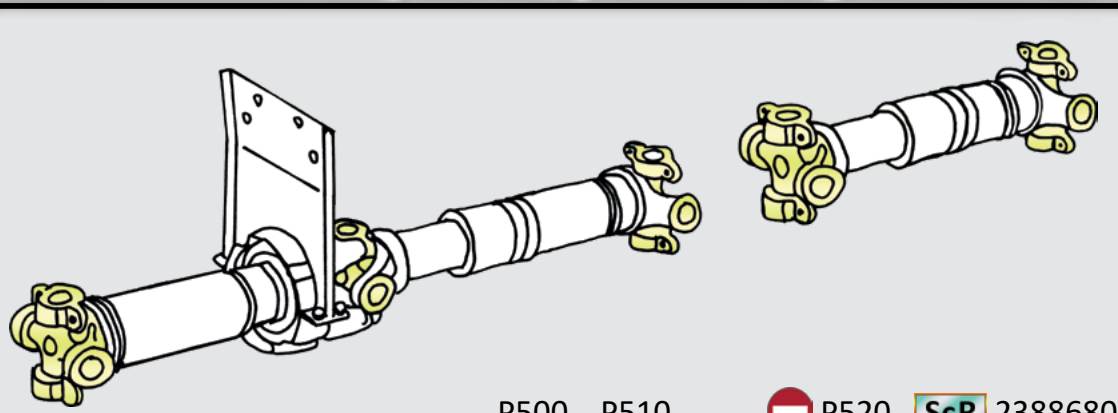

P500, P510 P520 ScR 2388680

LPGRS	08/2016→	KN	2006 →
GPR	2004 - 2018	94, 114, 124	1994 - 2010
94 - 164	1994 - 2008		

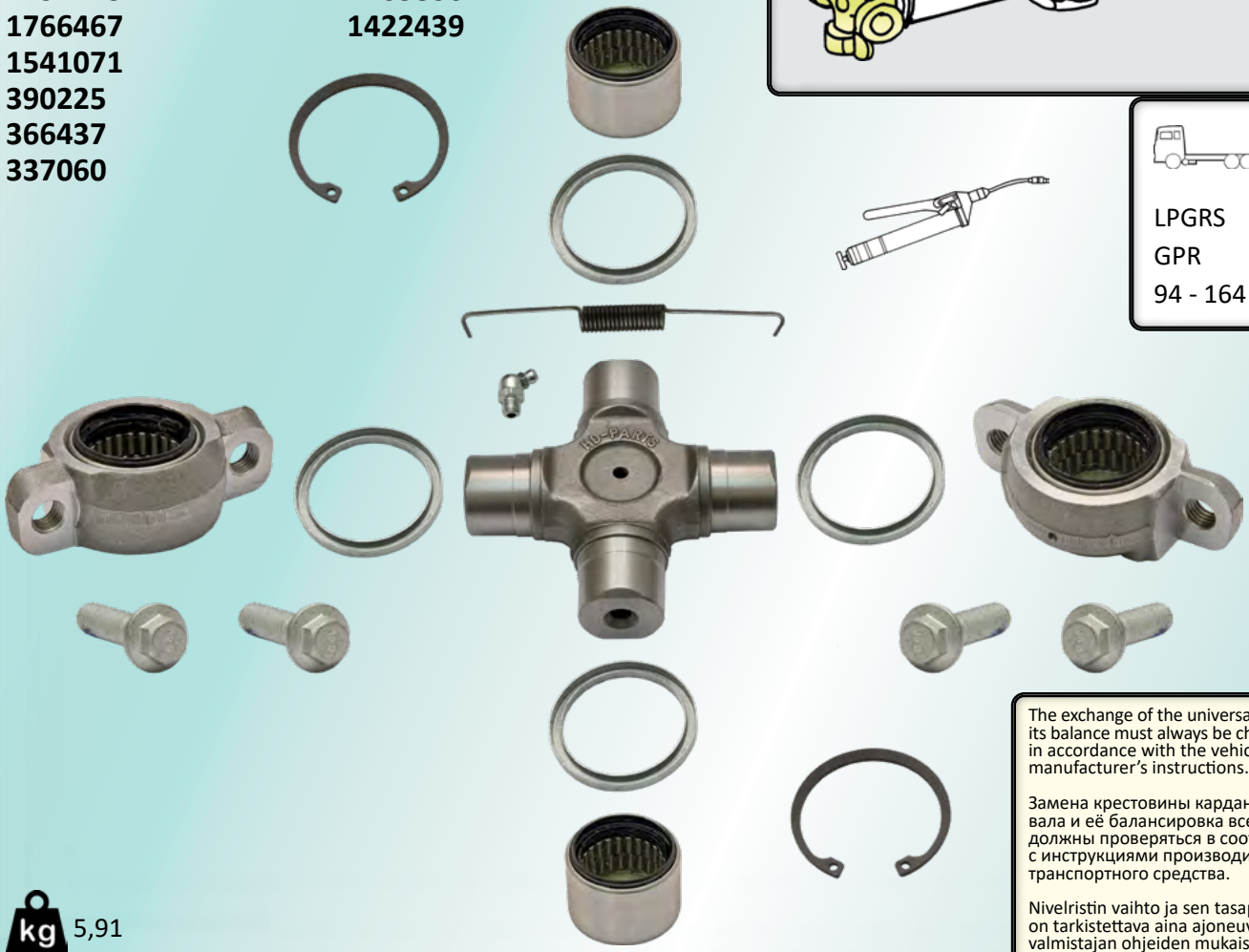

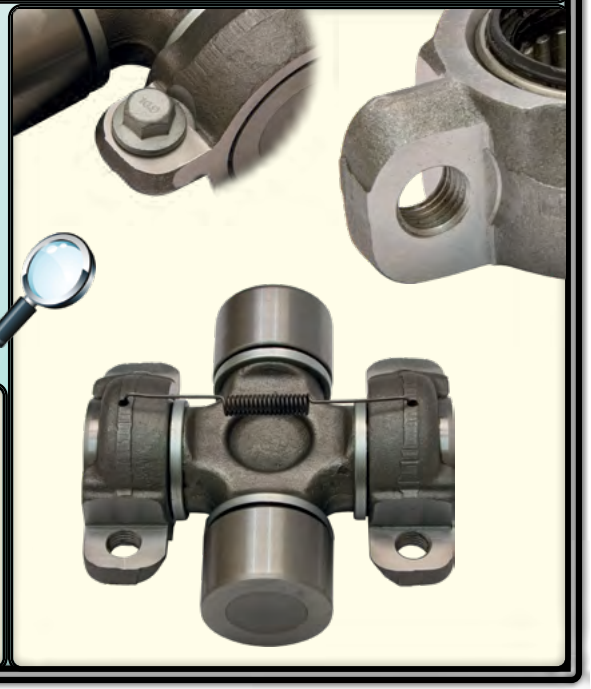

kg 5,91

The exchange of the universal joint and its balance must always be checked in accordance with the vehicle manufacturer's instructions.

Замена крестовины карданного вала и её балансировка всегда должны проверяться в соответствии с инструкциями производителя транспортного средства.

Nivelristin vaihto ja sen tasapaino on tarkistettava aina ajoneuvon valmistajan ohjeiden mukaisesti.

306060

Universal joint, lubricated



ScR

1879541
1541072
1422442
386073

The exchange of the universal joint and its balance must always be checked in accordance with the vehicle manufacturer's instructions.

Замена крестовины карданного вала и её балансировка всегда должны проверяться в соответствии с инструкциями производителя транспортного средства.

Nivelristin vaihto ja sen tasapaino on tarkistettava aina ajoneuvon valmistajan ohjeiden mukaisesti.

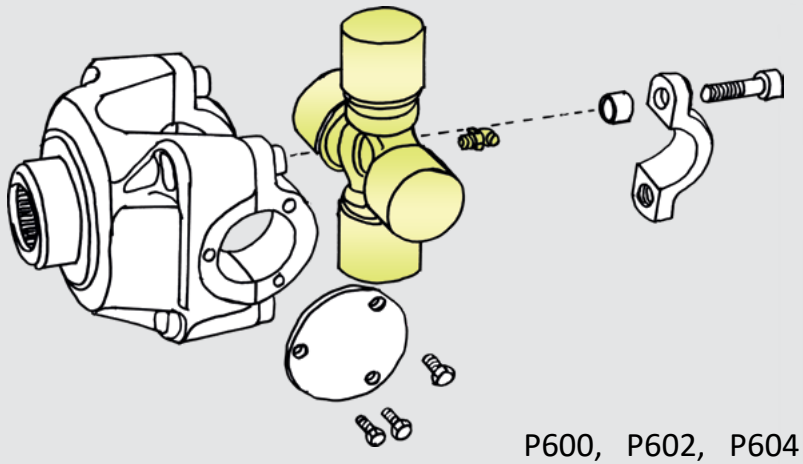

P600, P602, P604
P610, P612, P614
P640, P642, P644

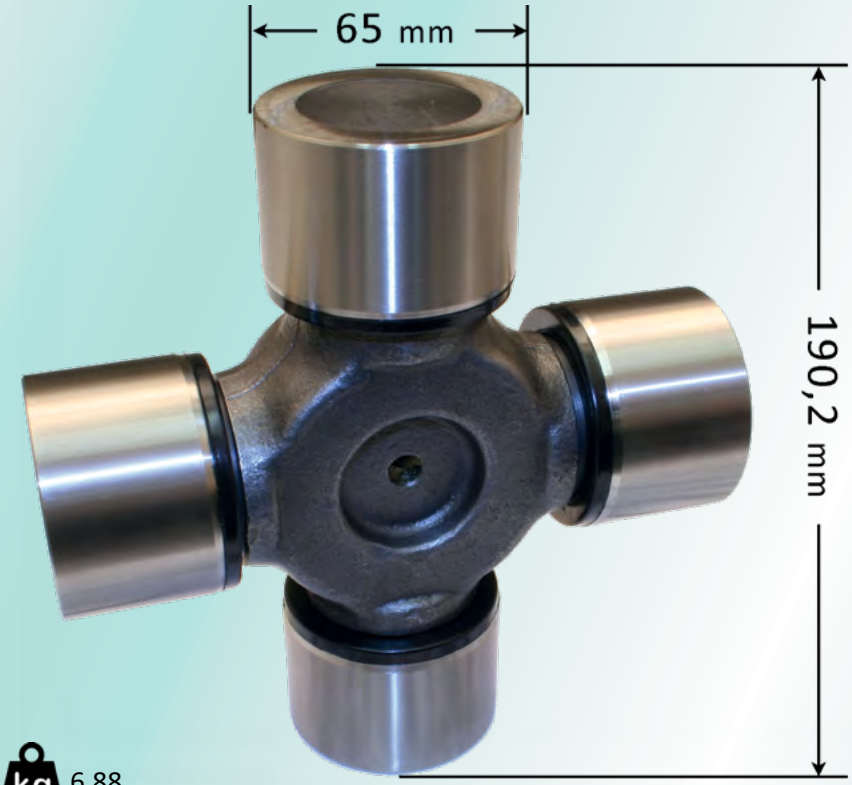

kg 6,88

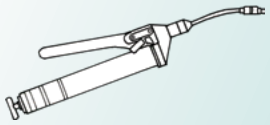



LPGRS	08/2016→
GPR	2004 - 2018
94 - 164	1994 - 2008

306020

Flange pivot kit

ScR x 4

1757877
1344182
1328597
1117597
313228

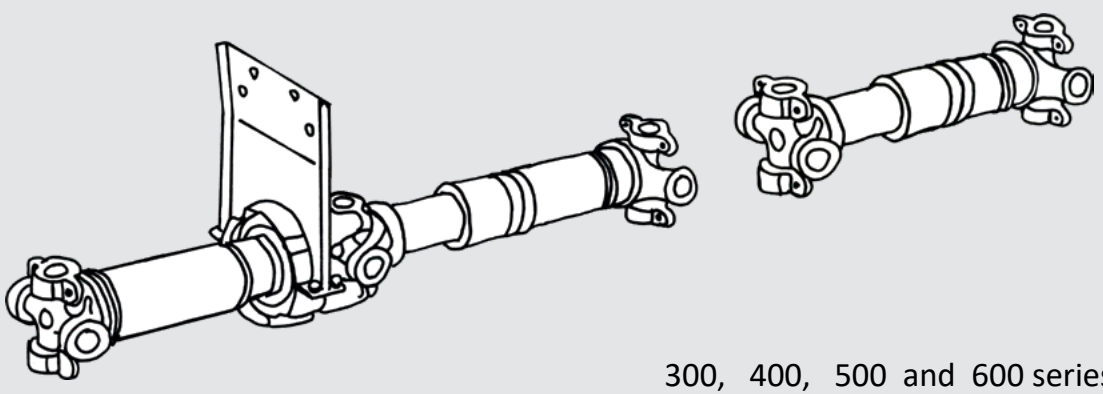

300, 400, 500 and 600 series

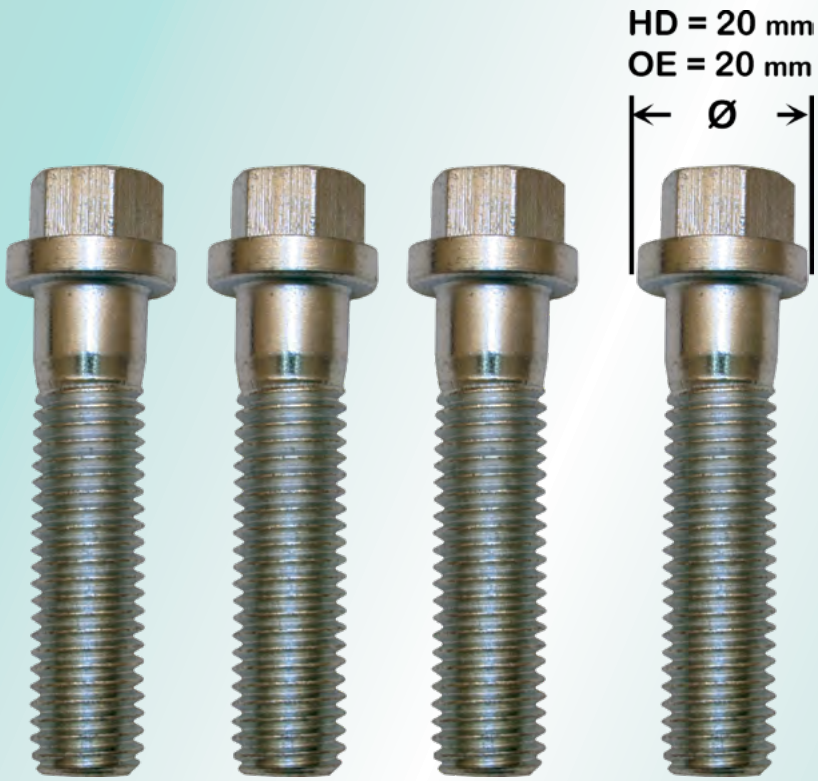

M12 x 1,75 x 50 mm 10.9

kg 0,22

GPR	2004 - 2018
94 - 164	1994 - 2008

KN	2006 →
94, 114, 124	1994 - 2010

306021

Special pivot kit

ScR **2145983** x 4

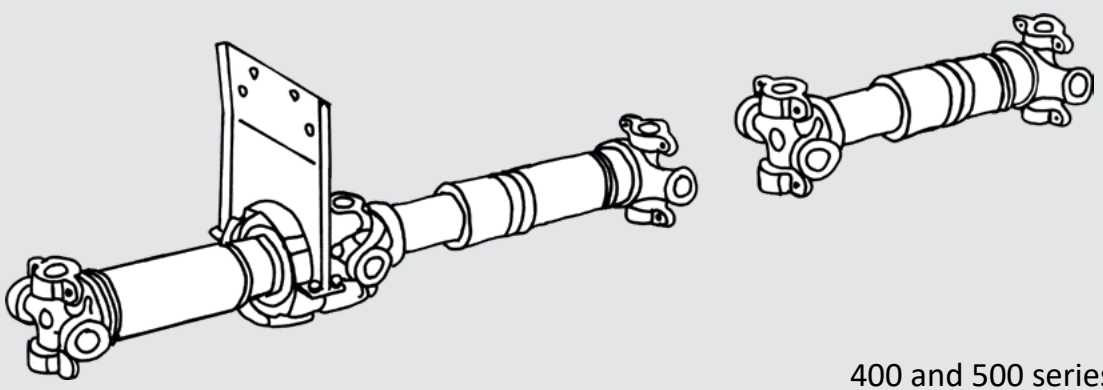

400 and 500 series

Material: 10.9 Steel
Flange: Ø 24 mm
Threads: 35 mm
Surface: Dacromet

Locking compound:
Blue color nylon

Use only in Scania new design universal joint kits:
HD 306040 and 306050



M12 x 1,75 x 50 mm 10.9

kg 0,25

LPGRS	08/2016 →
GPR	2004 - 2018

KN	2004 →

306142

Clamp kit, double

ScR 1506424

Material: Painted steel

Threads: M14 x 2,0 mm

Length: X mm

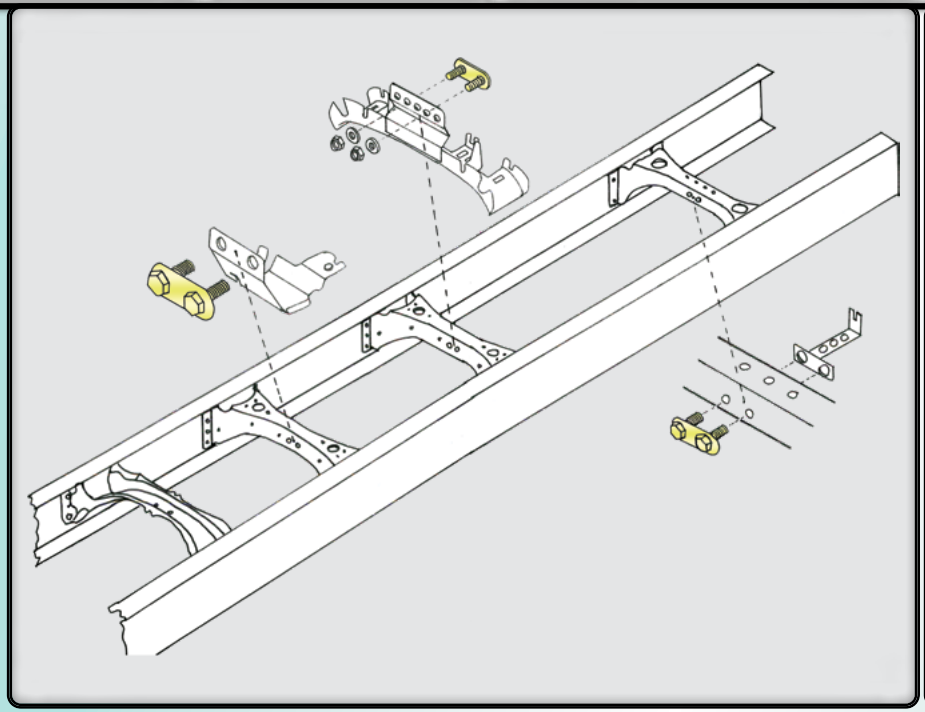

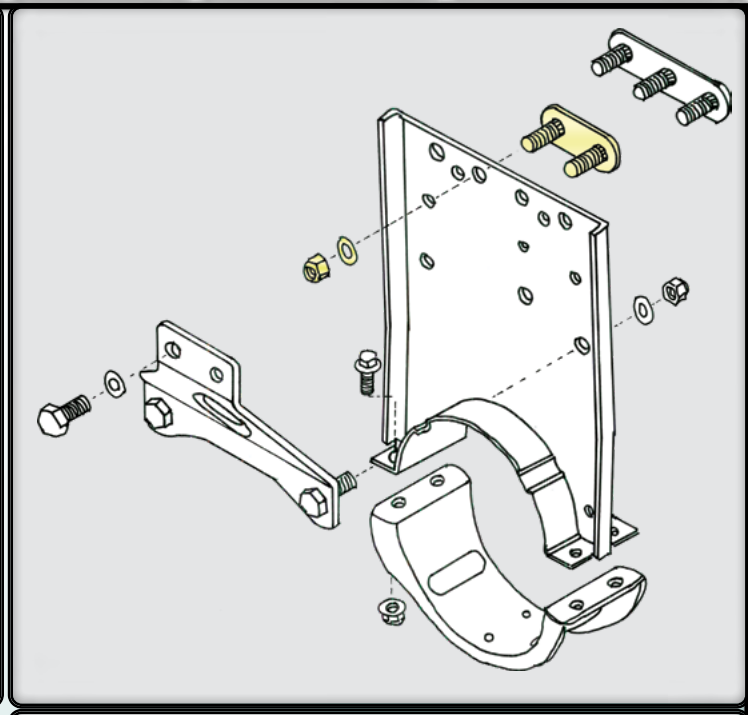



LPGRS	08/2016→
GPR	04/2004 - 2018

Contains extra parts:

2 x 803005	15 x 28 x 2,5 mm	special washer
2 x 815149	M14 x 2,0 mm	lock nut

Triple clamp → HD 306143

kg 0,29

306143

Clamp kit, triple

ScR 2107804

Material: Painted steel

Threads: M14 x 2,0 mm

Length: X mm



kg 0,43

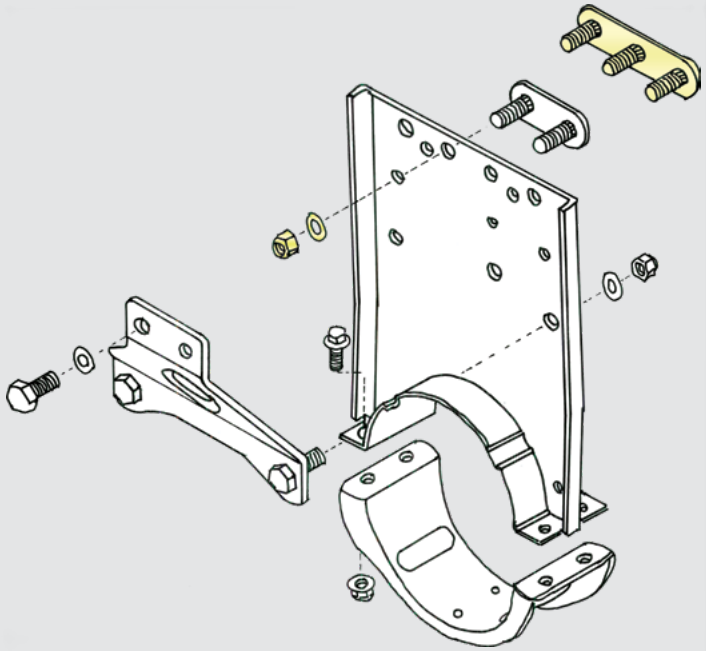

LPGRS	08/2016→
GPR	04/2004 - 2018

Contains extra parts:

3 x 803005	15 x 28 x 2,5 mm	special washer
3 x 815149	M14 x 2,0 mm	lock nut

Double clamp → HD 306142

306119

Bracket

ScR 1505656

Material: Painted steel



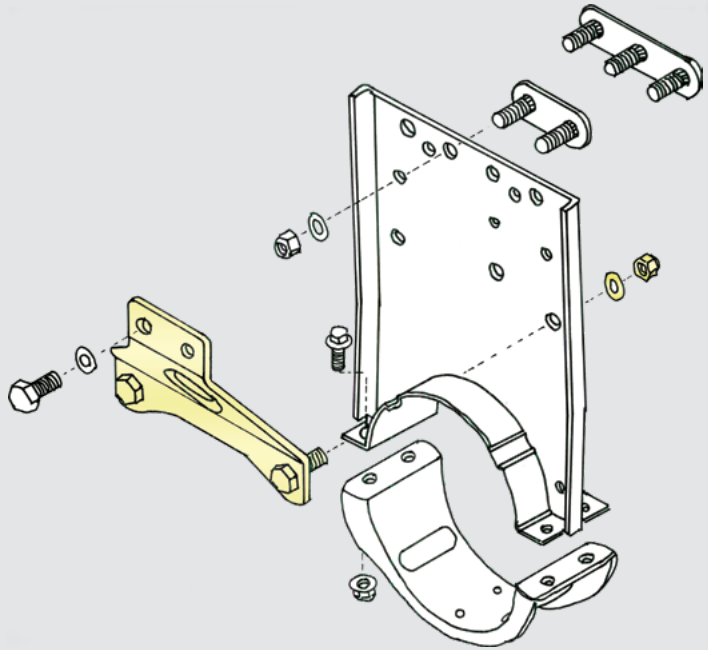

LPGRS 08/2016→
GPR 04/2004 - 2018

kg 1,33

Includes:

2 x 814859 M14 x 2,0 x 40 mm screw
2 x 803005 15 x 28 x 25 mm washer
2 x 815149 M14 x 2,0 mm lock nut

306115

Clamp lower, braced

ScR

1486855
1376164
1325635
264550



Material: Painted steel

kg 1,25

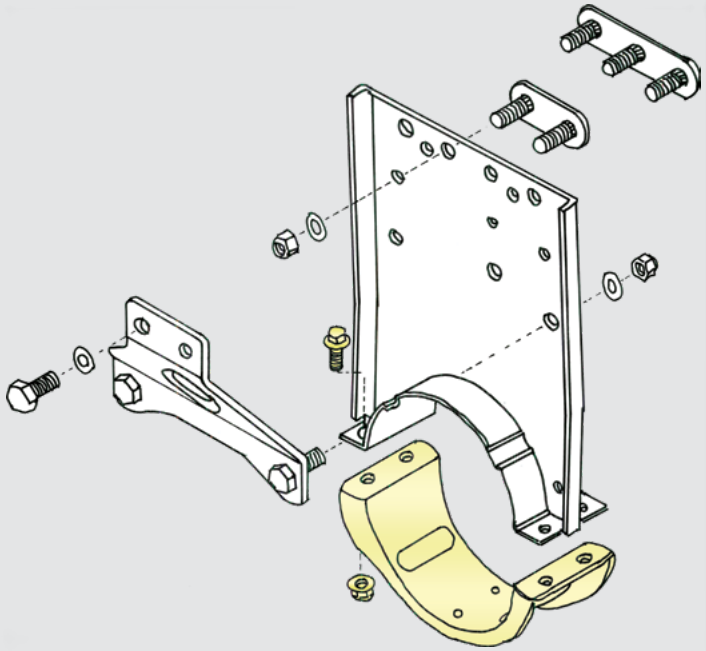

LPGRS	08/2016→
GPR	04/2004 - 2018
94 - 164	06/1995 - 12/2004
93 - 143	

K	11/2006→
94, 114, 124	10/1997 - 11/2006

HD - extra parts



4 x ScR 812536
M10 x 1,5 x 25 mm
DIN 6921 8.8

4 x ScR 815615
M10 x 1,5 mm 8

306120

Bracket

ScR

1887103
1505797

LPGRS	08/2016→
GPR	04/2004 - 2018
94 - 164	06/1995 - 12/2004
93 - 143	

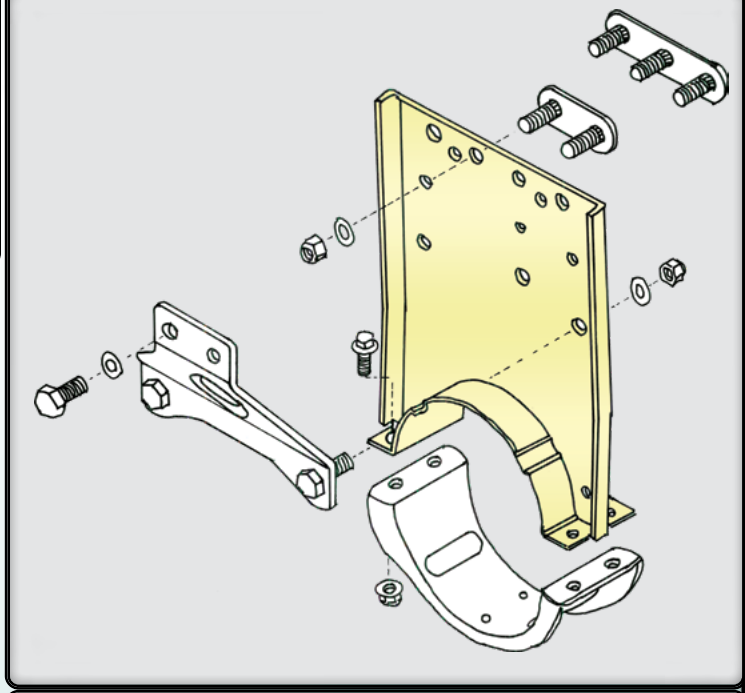



Height:
289 mm (Scania info)
315 mm (Max measured)

Width:
250 mm

Material: Painted steel

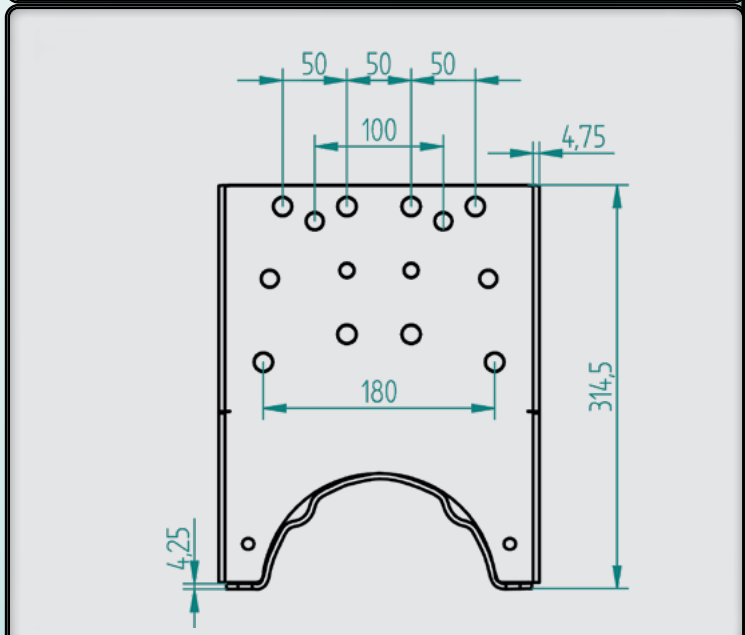

kg 3,66

306121

Bracket

ScR

1505800
1377023

LPGRS	08/2016→
GPR	04/2004 - 2018
94 - 164	06/1995 - 12/2004
93 - 143	

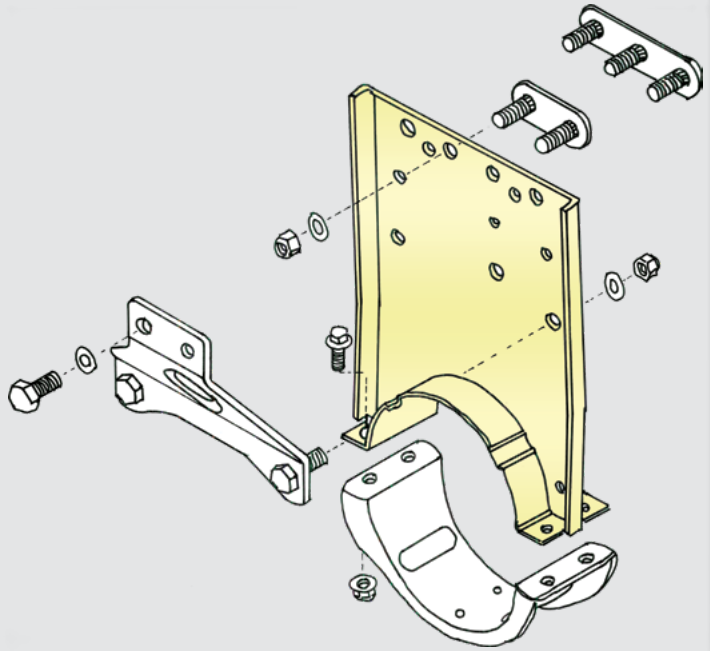

Height:
305 mm (Scania info)
335 mm (Max measured)

Width:
250 mm



Material: Painted steel

kg 3,84

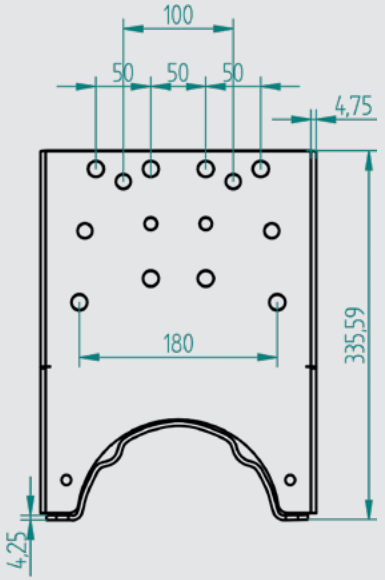

306122

Bracket

ScR **1527434**

LPGRS	08/2016→
GPR	04/2004 - 2018

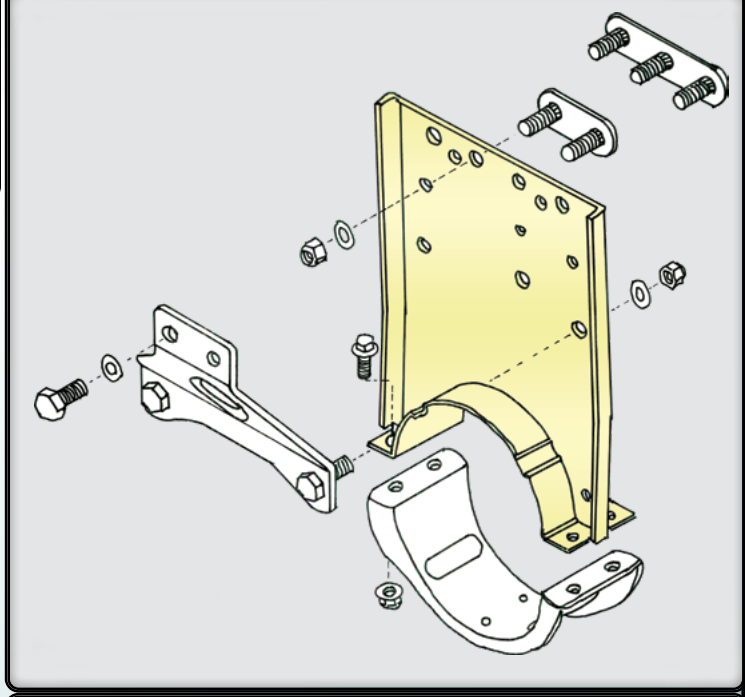

Height:
325,5 mm (Scania info)
355 mm (Max measured)

Width:
250 mm



Material: Painted steel

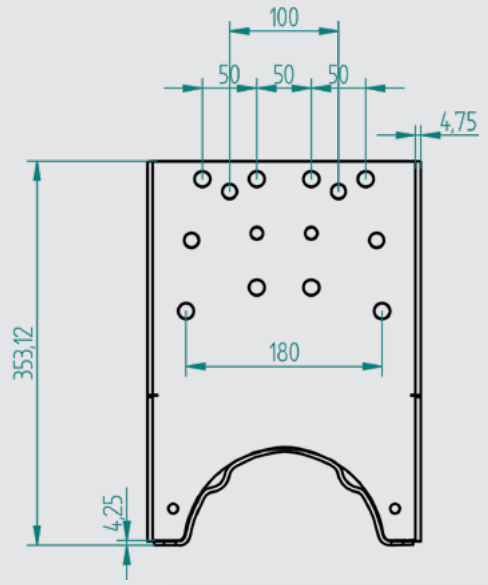

kg 4,04

306026

Flange locker → Propeller shaft

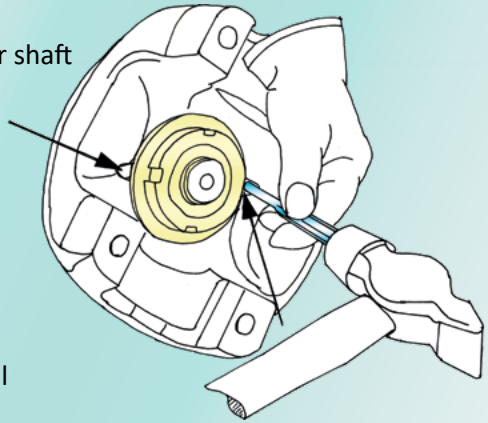

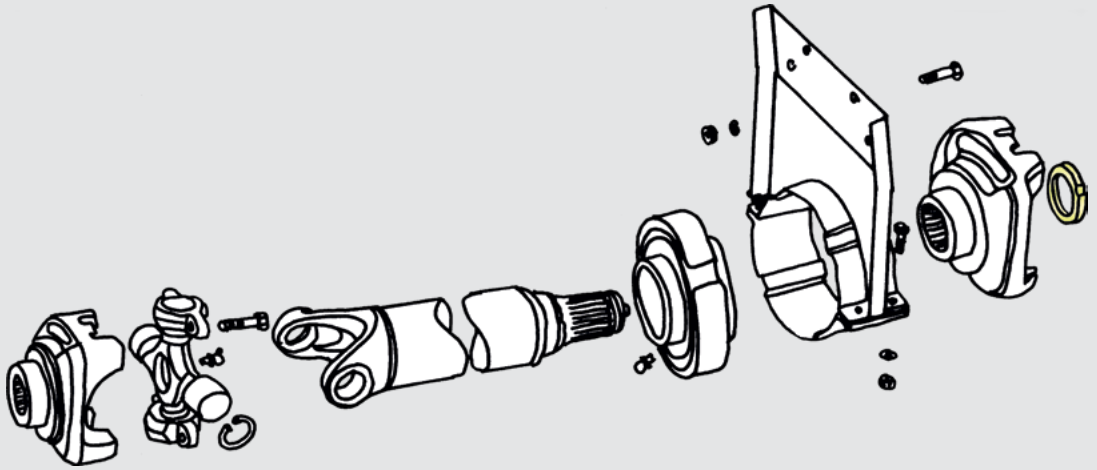

ScR

1525988
387877
353959

Material: Hot forged steel

Thread: M44 x 1,5 mm

Max Ø: 79,7 mm
Height: 15,5 mm
Flange: 2,0 mm

Replace the nut every time.
Lock the nut with punch.



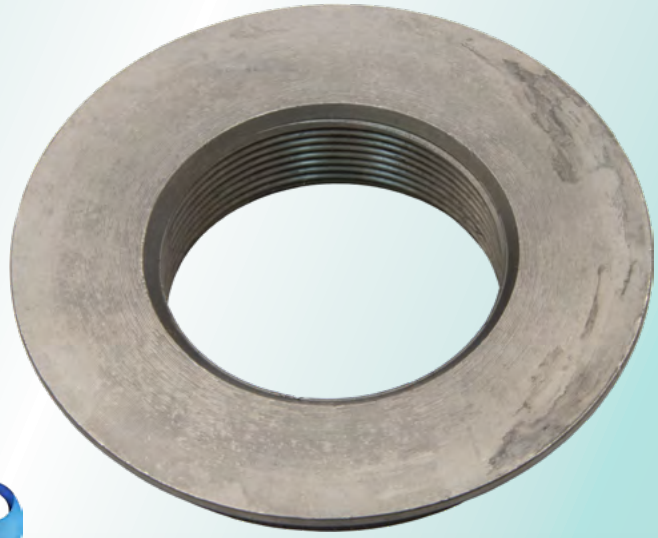

kg 0,26

LPGRS	08/2016→
GPR	04/2004 - 2018
94 - 164	06/1995 - 12/2004
93 - 143	1987 - 1996

KN	11/2005→
94, 114, 124	10/1997 - 11/2006
93, 113	1987 - 1999

307030

Adjusting sleeve

2 grooves
Earlier version
Material: steel

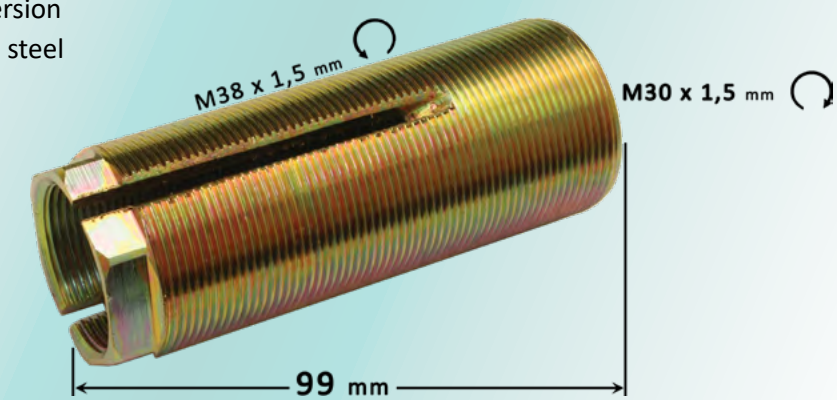

kg 0,29

ScR

2051040
1897337
1738376
1426493
1379192

VoR

21264203
20894440
20937675
3092548

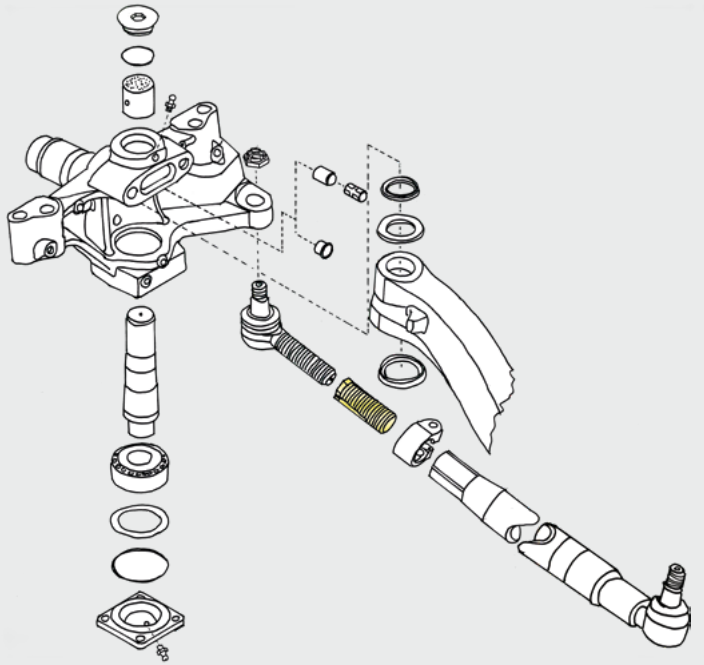

307031

Adjusting sleeve

3 grooves
Newer version
Material: steel

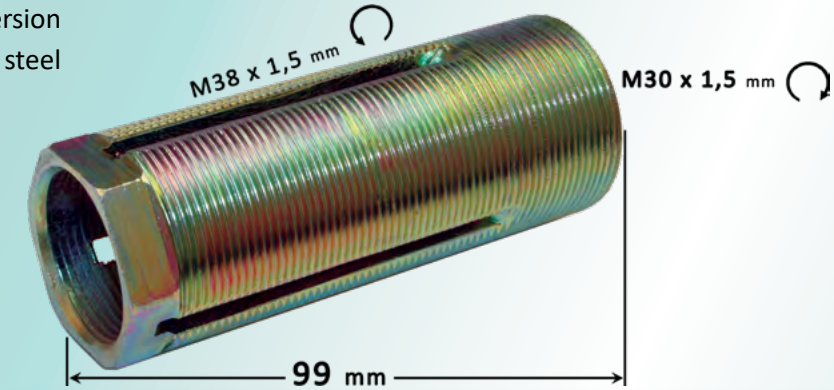

kg 0,28

ScR

2051040
1897337
1738376
1426493
1379192

VoR

21264203
20894440
20937675
3092548

LPGRS	08/2016→
GPR	04/2004 - 2018
94 - 164	06/1995 - 12/2004

KN	11/2005→
94, 114, 124	10/1997 - 11/2006

307081

King pin kit → 1-side

ScR

550284 06/1995→
550257 →02/1999

ScR 1438896
48,2 x 2,4 mm
FPM viton

ScR 806311
M08 x 1 mm
Steel

ScR 1343373
45 x 50 x 60 mm
SF-2 bushing

ScR 1403808
225 mm
Steel

NBR oil seal
ScR 1343372
45 x 60 x 6,5/8 mm

Steel washer
ScR 2013586
47,05 x 73,96 x 6,05 mm

NBR oil seal
ScR 1395999
55 x 72/76 x 9,5/13 mm

ScR 1911816
20°

Shims →

ScR 814857
M14 x 2,0 x 30 mm

ScR 811045
Ø84,5 x 3 mm
NBR

ScR 806312
M10 x 1 mm

kg 4,86

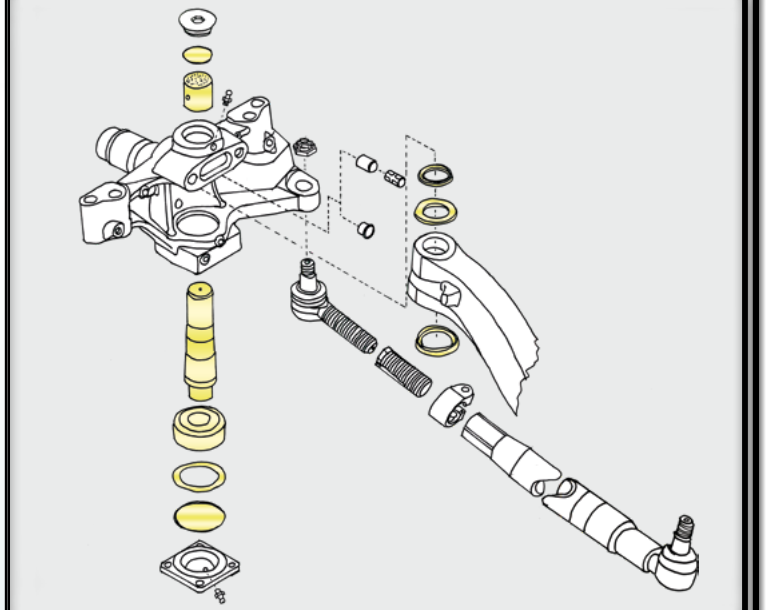

LPGRS	08/2016→
GPR	04/2004 - 2018
94 - 164	06/1995 - 12/2004

KN	11/2005→
94, 114, 124	10/1997 - 11/2006

307070

King pin kit → 1-side

ScR -

HD own design

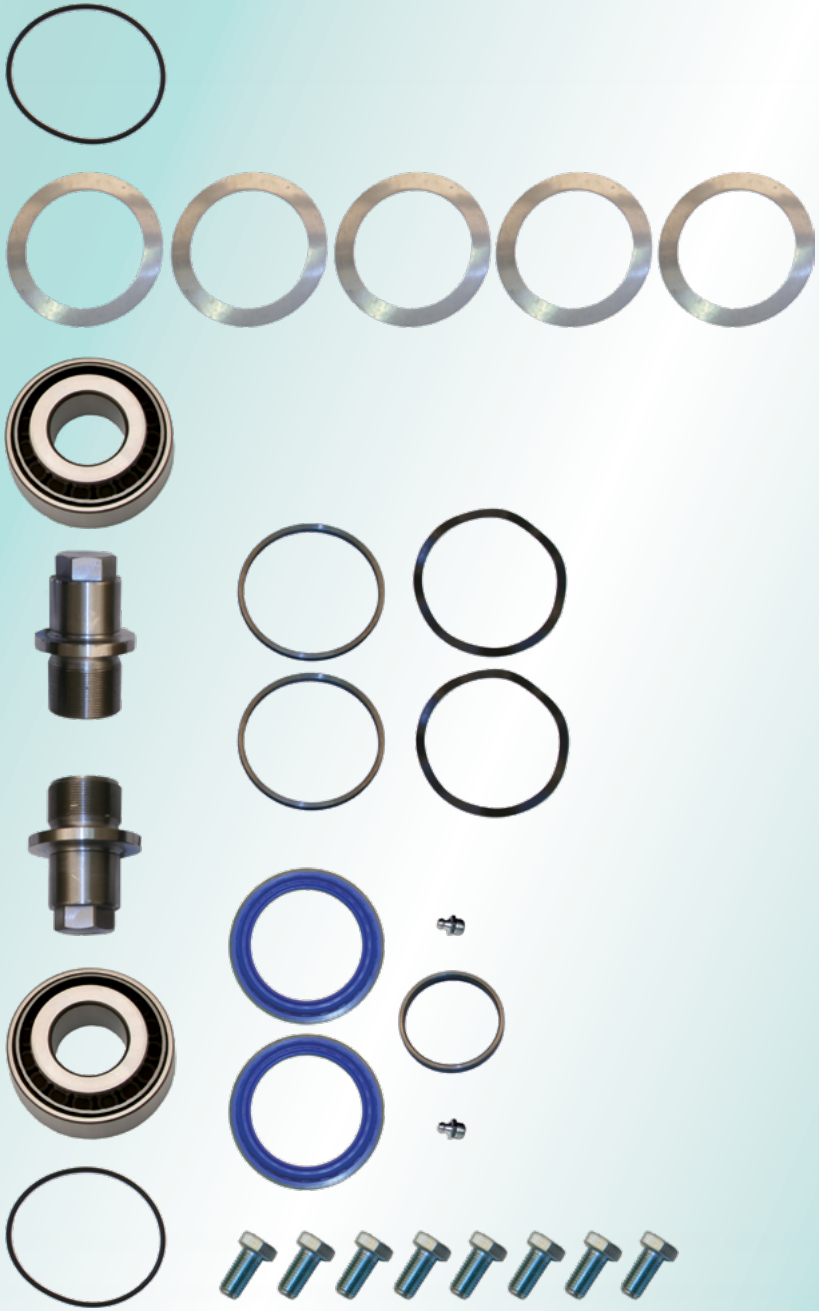

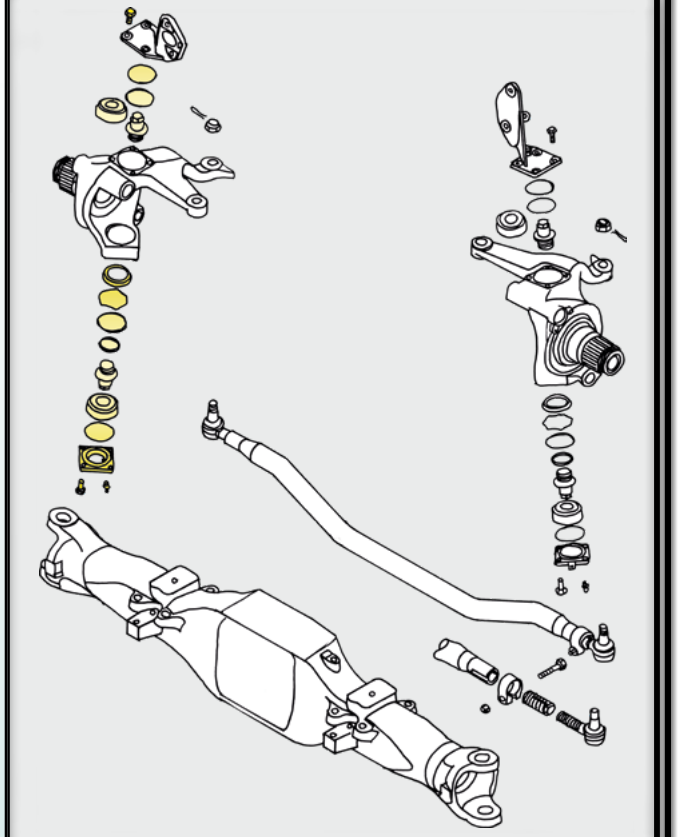

kg 4,75

LPGRS	08/2016 →	AMD 600 TZP
GPR	04/2004 - 2018	AMD 900 / 1 / 2
94 - 164	06/1995 - 12/2004	AMD 900 / 1 / 2

4 x 4	4 x 4+2	
6 x 6	6 x 4/4	6 x 4*4
8 x 6	8 x 6+2	8 x 6/4
8 x 4-2	8 x 4*6	
8 x 8	8 x 8-2	

309310

Fastening kit

ScR x 10

1340934
1340933
41181

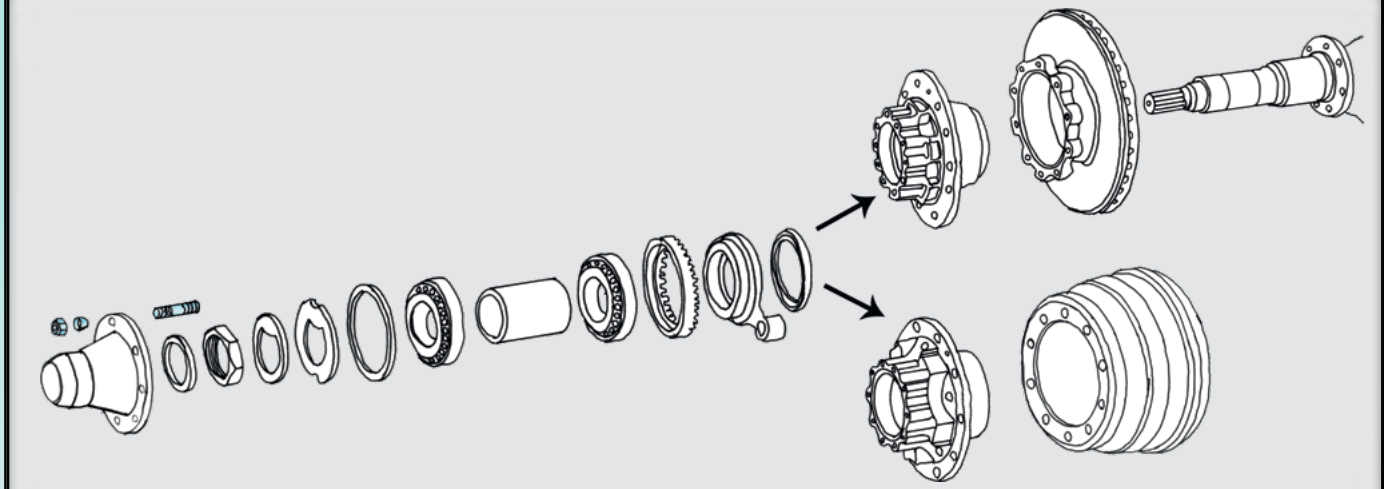



ScR 1340934, 176815

M12 x 1,75 x 60 (18-24-18) mm

8.8



ScR 41181 Spring steel

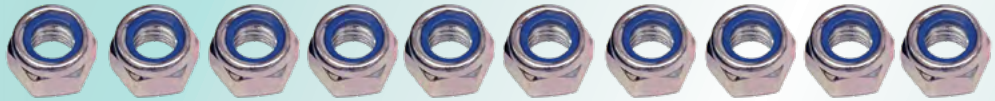

ScR 1340933

M12 x 1,75 mm Nyloc 8

kg 0,7

LPGRS	08/2016 →
GPR	04/2004 - 2018
94 - 164	06/1995 - 12/2004

KN	11/2005→
94, 114, 124	10/1997 - 11/2006

309802

Hub cap

ScR 1864221

Material: Aluminium

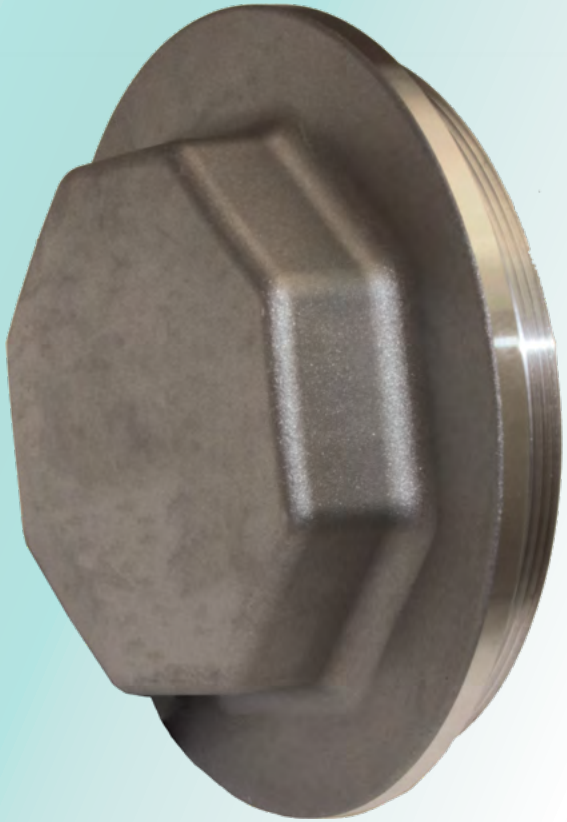

M136 x 2 mm

Ø 150 mm

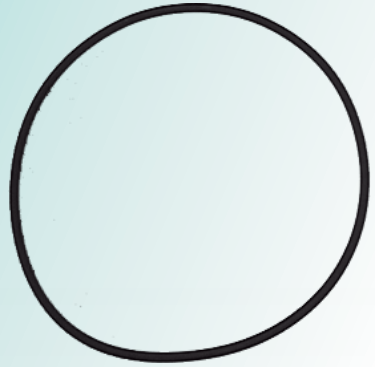

O-ring NBR 134,5 x 3,0 mm

ScR 368034

kg 0,38

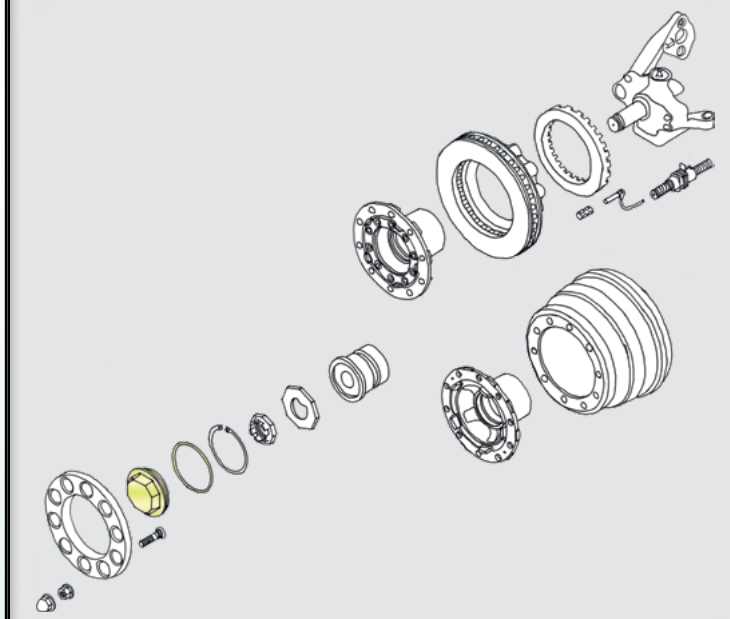

LPGRS		08/2016 →
GPR	2059928→ 5252955→ 9154228→ 3678248→	11/2010 - 2018

KN	1873108→ 3678248→	11/2010→ 02/2011→

309800

Hub cap

ScR

1762224
1750065
1728076
1480333
1381114
1371596

Material: Aluminium



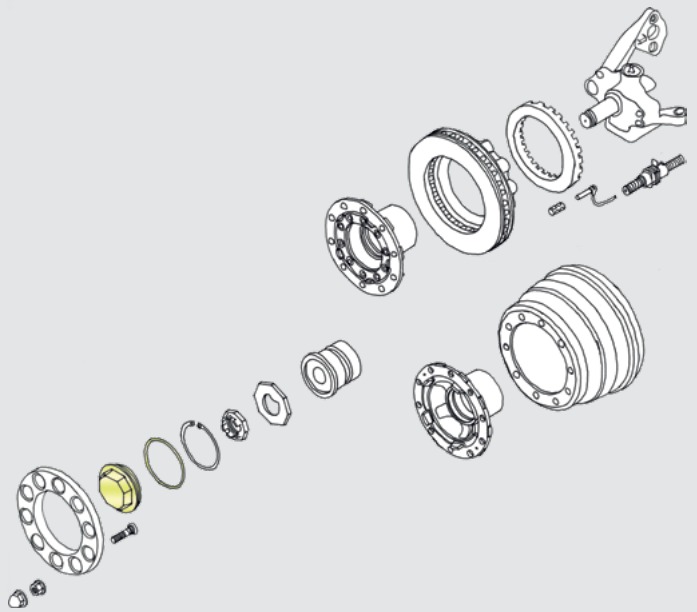

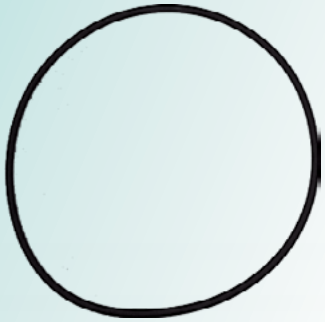

O-ring NBR 129,5 x 3,0 mm
ScR 804725

kg 0,39

GPR	→2059927 →5252954 →9154227 →3678247	→11/2010
94 - 164		All
93 - 143		All

KN	1855904 - 1873107 3600795 - 3678247	09/2006 - 11/2010
94, 114, 124		All
ASA 700/701/760	ARA 860/860D	

309847

Flange locker → Hub

ScR

2655323
1792944
1773308



Thread: M85 x 2,0 mm
Max Ø: 114,4 mm
Spanner: 100 mm

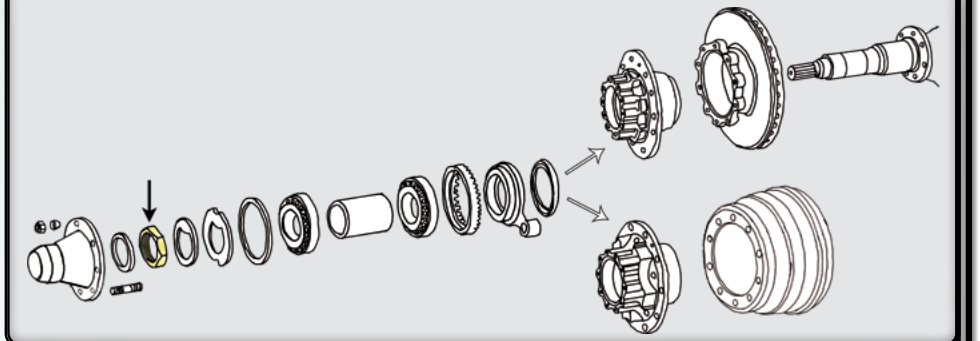

Torque:
1100 Nm
112 kpm

Material: Hot forged steel

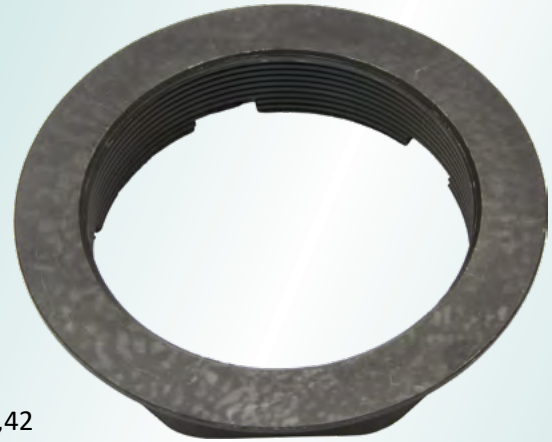

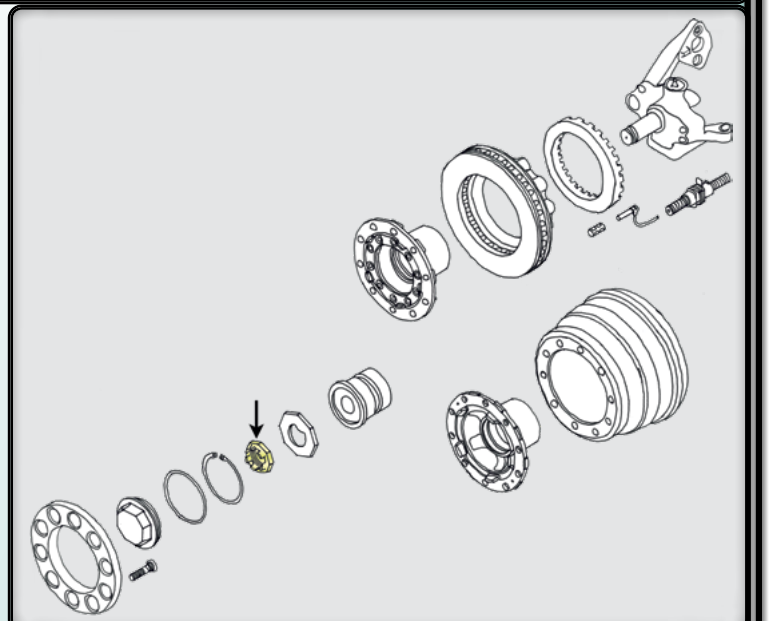

kg 0,42

HD nut is locking nut, but still needs to be locked from the flange.
Lock the nut with punch.

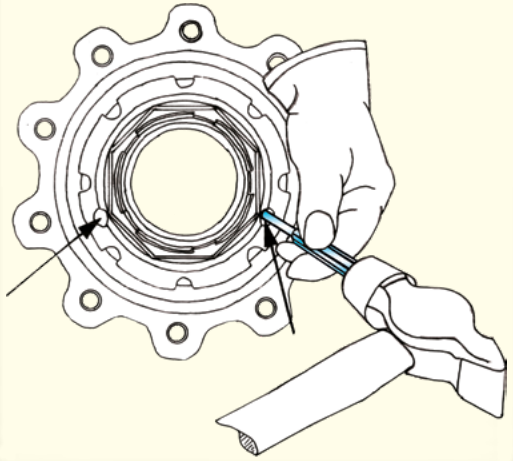

New locking nut with flange and new washer with two holes for locking.

11/2005→

2012508→
5137842→
9106009→
3580359→

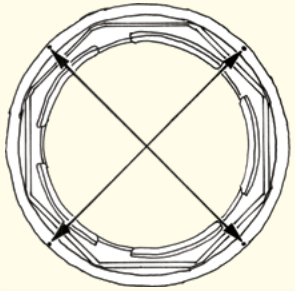

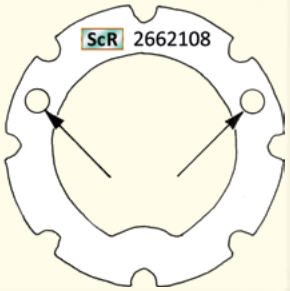

LPGRS	08/2016→
GPR	04/2004 - 2018
KN	11/2005→

309850

Locker → Hub (front & tag)

ScR

1873183
1403618
1356196

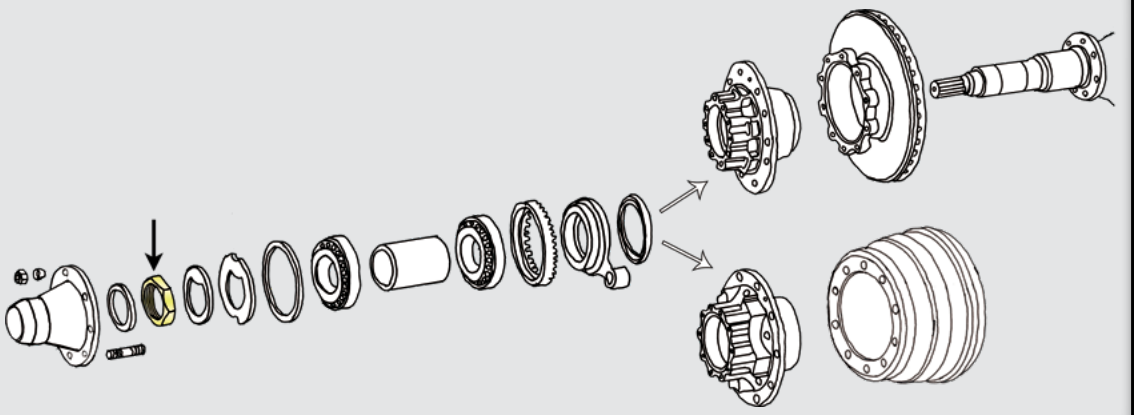



Thread (RHT): M60x2,0 mm
Max Ø: 86 mm
Spanner: 80 mm

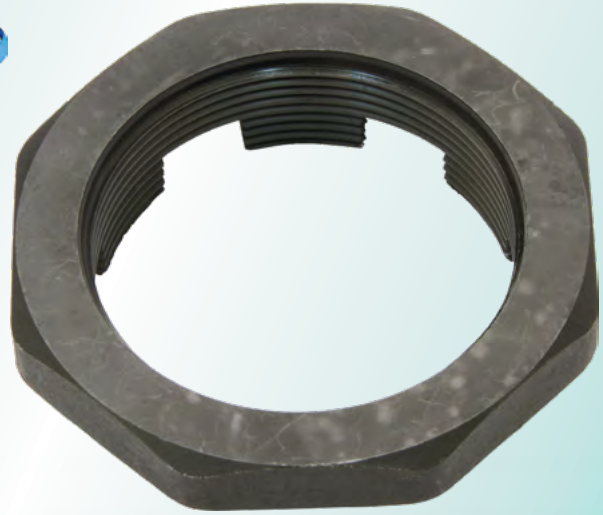

Material: Hot forged steel

kg 0,25

LPGRS	08/2016→
GPR	04/2004 - 2018
94 - 164	06/1995 - 12/2004
93 - 143	1987 - 1996

KN	11/2005→
94, 114, 124	1987 - 1999

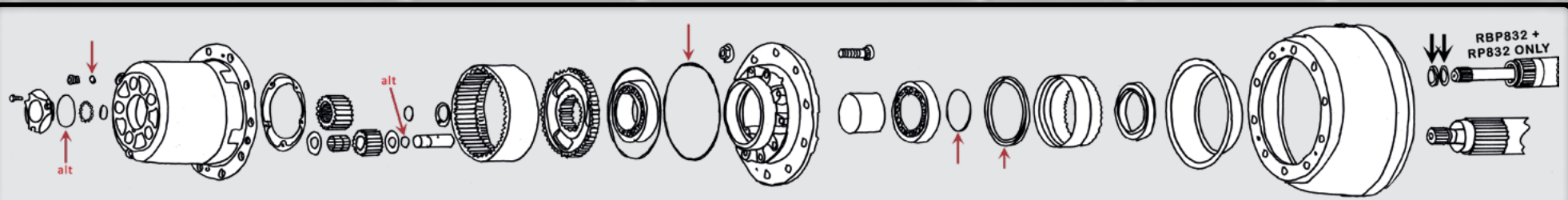

309918

Gasket kit → Hub reduction

ScR



→ gr 3,81:1

ScR **1503399**

FPM / Viton
84,5 x 3,0 mm

NBR
32,1 x 1,6 mm
ScR **804891**

Alternative gear ratio

Both O-ring versions are included in kit

→ gr 4,21:1

ScR **1925549**

FPM / Viton
80,0 x 3,0 mm

NBR
35,1 x 1,6 mm
ScR **804892**

GPR 04/2004 - 2018

RBP 835 + RP 835, RH 835
RBP 735 + RP 735

94 - 164 10/1997 - 11/2006

RBP 832 + RP 832
RBP 835 + RP 835
RBP 735 + RP 735

93 - 143

LPGRS 08/2016→

FPM / Viton
249,3 x 5,7 mm

ScR **392309**
HD **309920**

LPGRS
GPR
94 - 164
93 - 143

kg 0,53

NBR

ScR
1907845
1786639
1528043
1363674
1309342

HD
309915
158 mm x
188 mm x
13,5/16

kg 0,39

NBR 17,3 x 2,4 mm
ScR **810964**
392520

NBR
100,0 x 6,5 mm
ScR **276587**

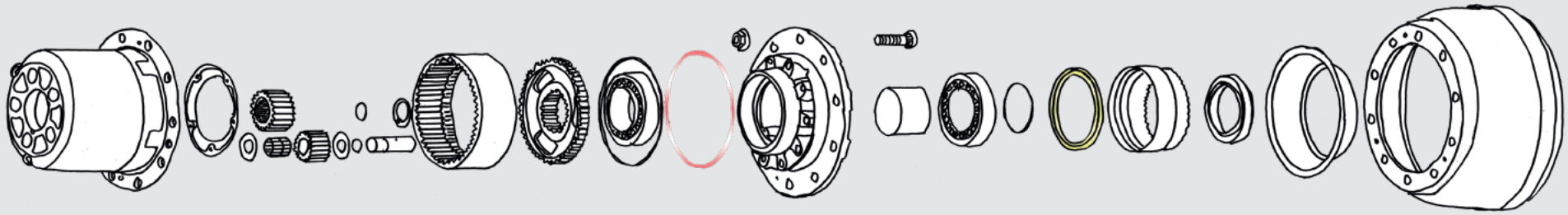

309915

Oil seal, cassette design

ScR

1907845
1786639
1528043
1363674
1309342

Reference numbers:

DT	**117200**
Febi	**10002**
Sampa	**040276**

kg 0,39



157,3 x 188,4 x 16 mm



Suitability 309915 and 309920:

GPR — 04/2004 - 2018

RBP 835 + RP 835
RH 835
RBP 735 + RP 735

94 - 164 — 06/1995 - 12/2004

RBP 832 + RP 832
RBP 835 + RP 835
RBP 735 + RP 735

309920

O - ring

ScR **392309**
298021

kg 0,04



Suitability 309920 O-ring only:

GPRS — 2016→

AD400SAP

RP 835

309908

Oil seal kit → Rear hub

ScR 550905



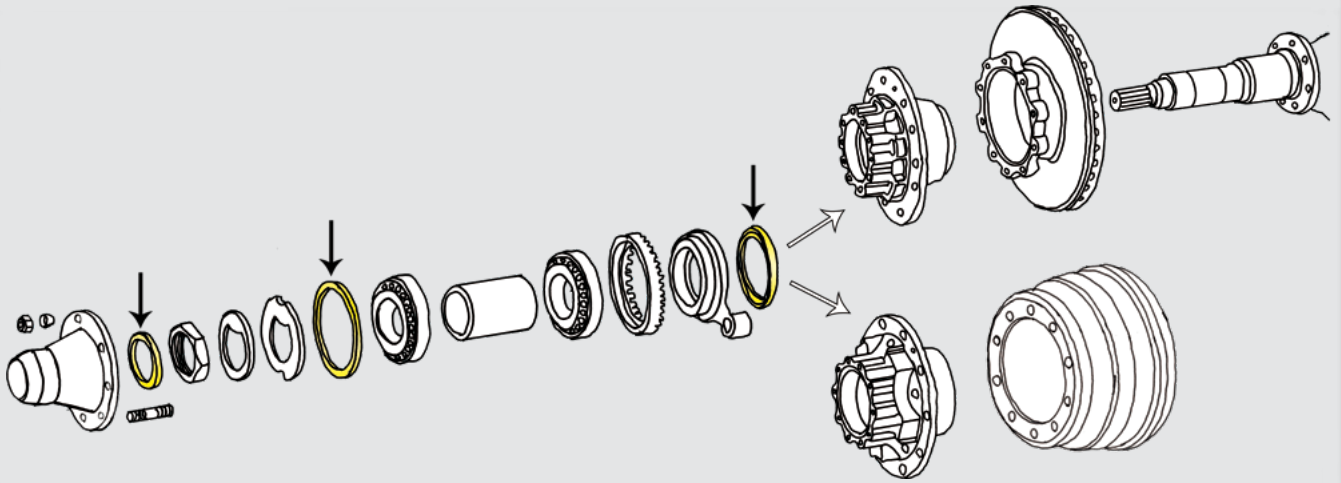

GPR	04/2004 - 2018	KN	11/2005→
94 - 164	06/1995 - 12/2004	94, 114, 124	10/1997 - 11/2006

(GPRS)

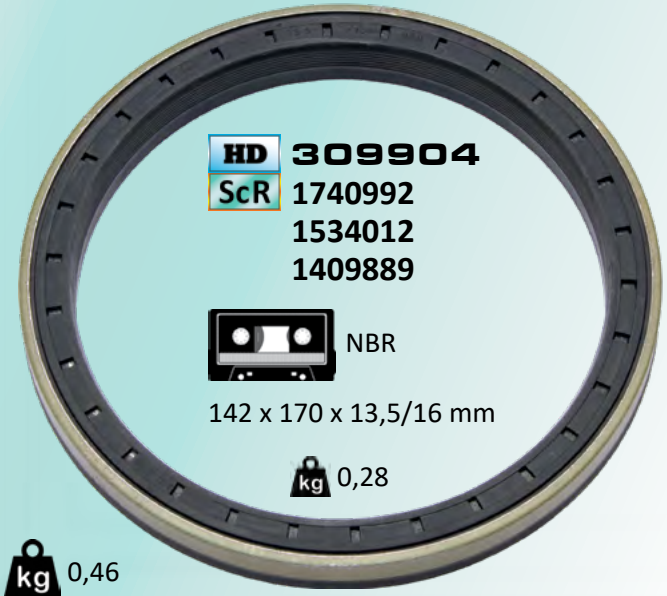

HD 309904
ScR 1740992
1534012
1409889

NBR

142 x 170 x 13,5/16 mm

0,28

0,46



HD 309910
ScR 1765061
120310

Material: Special NBR
-40°C → +120°C
Shore A72

160,4 x 170 x 4,8/5,8 mm

0,1

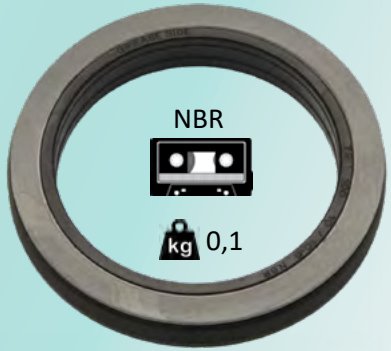

HD 309903
ScR 1409890
1313719
33352

NBR

0,1

75 x 100 x 11,8/13,5 mm

309200

Nut of wheel hub

ScR

2285273
1749034
1365510
318690
243956



BSF
7/8" - 11 / 10.9

33 mm
600 Nm (61 kpm)

0,16

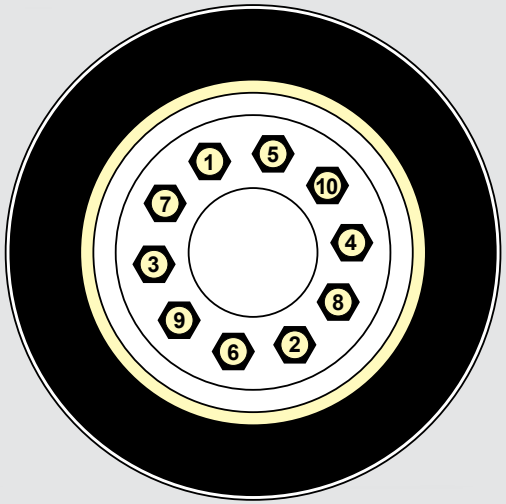

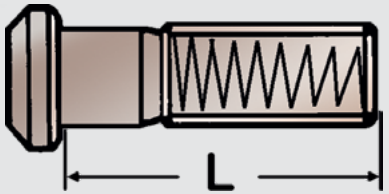

BSF
7/8" - 11 / 10.9



309201

Stud of wheel hub

ScR

1368690
397266
290062



0,28

309202

Stud of wheel hub

ScR

1368692



0,31

309204

Stud of wheel hub

ScR

1368693
295953



0,31

309206

Stud of wheel hub

ScR

1368694
272853



0,36

309208

Stud of wheel hub

ScR

1420775
337561



0,41

309209

Stud of wheel hub

ScR

1368695



0,38

309220

ScR

Stud of wheel hub

2285275
1868665



kg 0,30

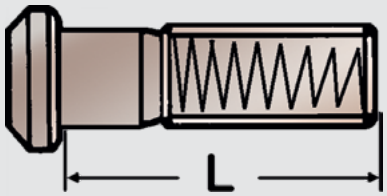

BSF
7/8" - 11 / 10.9





309221

ScR

Stud of wheel hub

2285276
1929456



kg 0,31

309222

ScR

Stud of wheel hub

2285277
1868666
1929456
(74 mm)



kg 0,30

309223

ScR

Stud of wheel hub

2285278
1868667



kg 0,33

309207

ScR

Stud of wheel hub

2285279
1528712
1421005



kg 0,34

309224

ScR

Stud of wheel hub

2285280
1868668



kg 0,37

309225

ScR

Stud of wheel hub

2285281
1528655



kg 0,38

309235

ScR

Stud of wheel hub

2285282
1847739



kg 0,41

609200

Nut of wheel hub

VoR	947972
MBR	385 400 0124
MBR	617 400 0024
MBR	620 400 0024
MBR	000 401 0672
ManR	81.45503.0049
ManR	81.45503.0026
Iveco R	0445 9603
Iveco R	0206 4102
DAF R	0620 652
DAF R	0206 4102
BPW	02.5219.27.10
BPW	02.4219.22.10
BPW	05.2605.40.90
SAF	4 247 3012 00

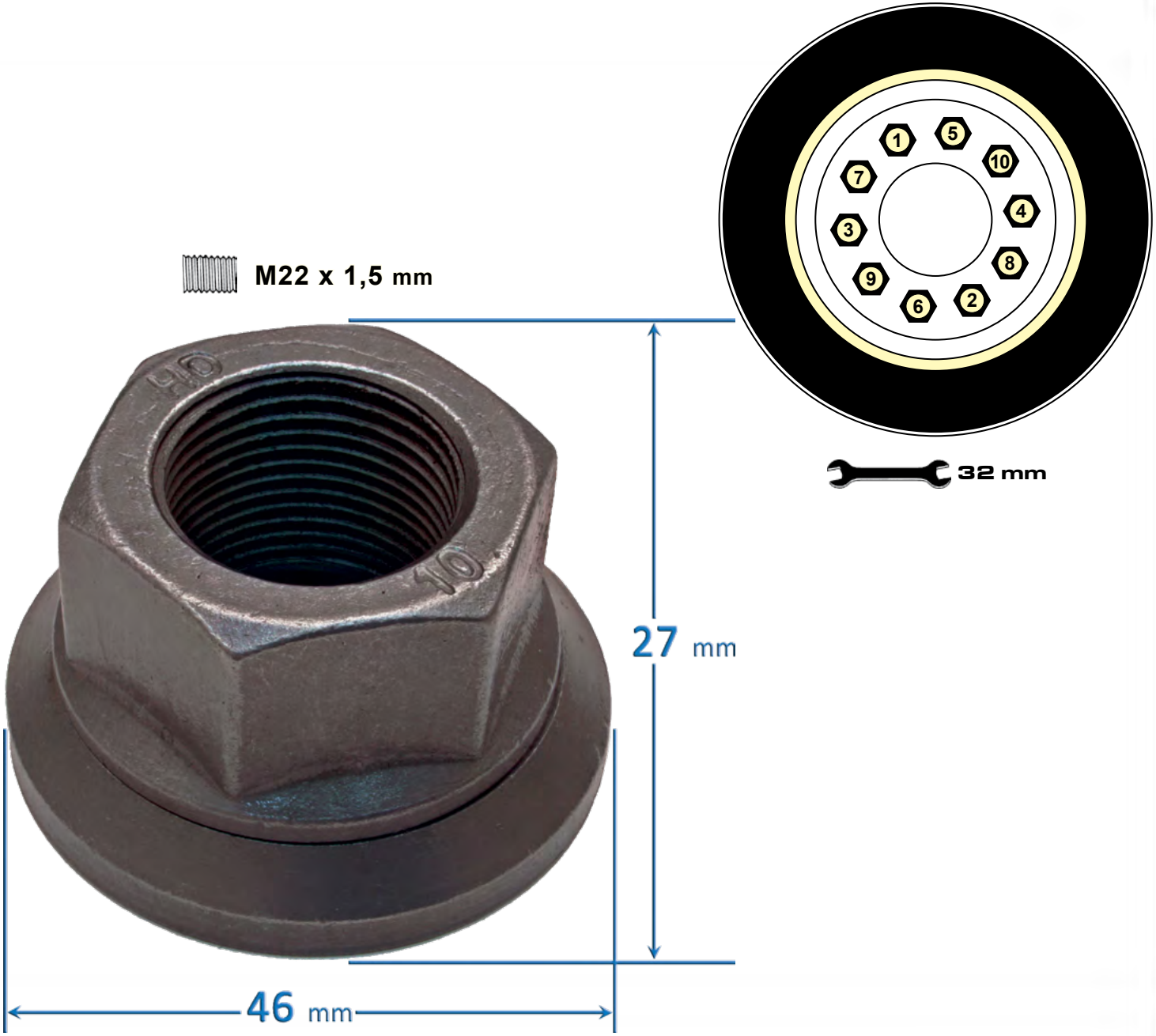

kg 0,14

310001

Brake roll kit

ScR



ScR 811768
5 x 36 mm

ScR 1338018
32,2 x 3,0 mm
Silicon

ScR 154262
25 x 54 mm

ScR 154259
25 x 60 x 28 mm

+

ScR 154261 x 2
Bushings
25 x 28,1 x 10 mm

kg 0,69

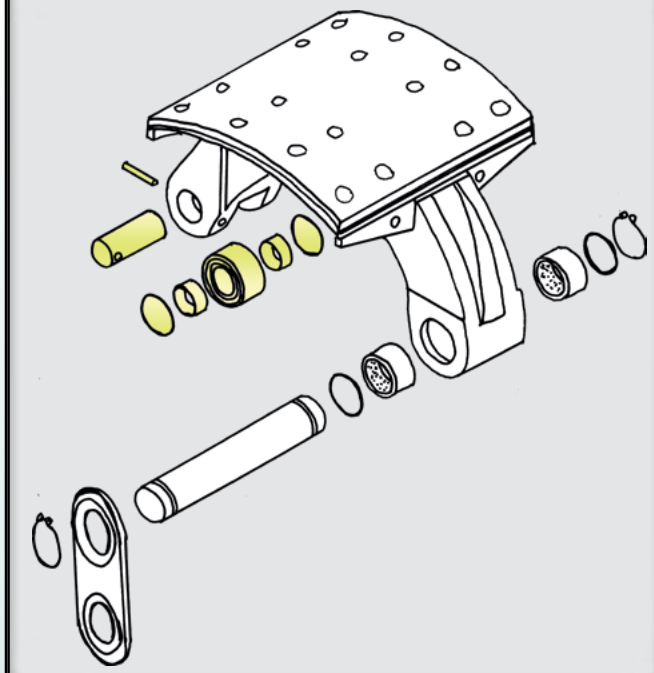

LPGRS	08/2016 →
GPR	04/2004 - 2018
94 - 164	06/1995 - 12/2004

80 - 145, 81 - 146, 82 - 142, 93 - 143

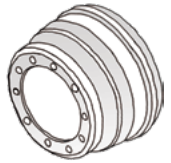

2 /

310018

HD - bushing kit for S-cam shaft → front and tag axle

ScR









ScR **1349089**

38,1 x 50,0 x 6,8 mm

NBR

ScR

289336
134494

38,1 x 42,1 x 26 mm

High quality bronze

kg 0,14

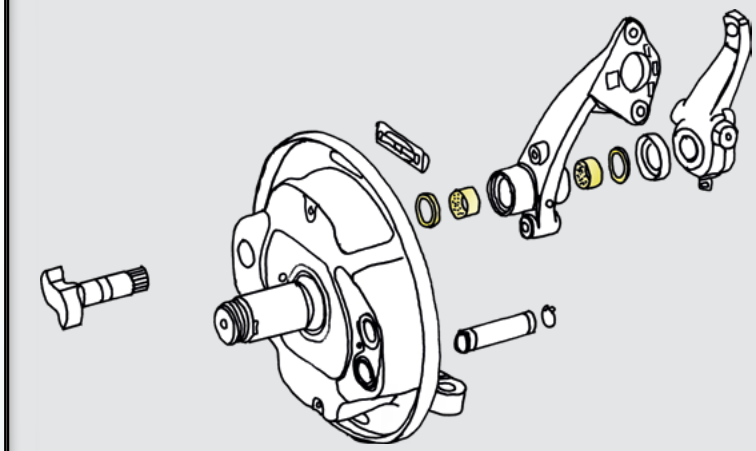

LPGRS	08/2016 →
GPR	04/2004 - 2018
94 - 164	06/1995 - 12/2004

80 - 145, 81 - 146, 82 - 142, 93 - 143

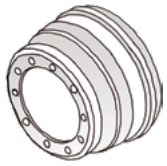

310023

HD - bushing kit for S-cam shaft → rear axle

ScR



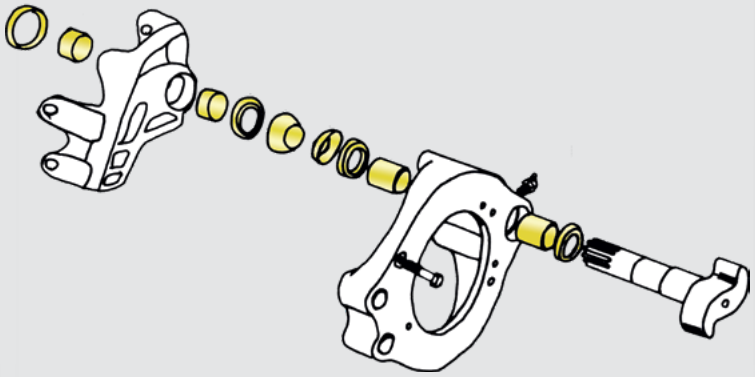

ScR **1345278**

44,45 x 60,0 x 7,0 mm

ScR **1321727**

EPDM rubber

ScR **1345279**

44,45 x 58,0 x 7,5/13,5 mm

NBR

ScR **1302857**
141168

44,5 x 49,2 x 15,8 mm

POM with fibre yellow
Steel body

kg 0,31

LPGRS	08/2016 →
GPR	04/2004 - 2018
94 - 164	06/1995 - 12/2004

80 - 145, 81 - 146, 82 - 142, 93 - 143

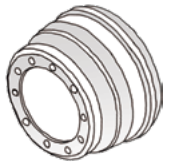

310032

Bushing kit for anchor pin

ScR



ScR **804782**

32 x 26,9 x 1,5 mm
Din 471



ScR **1338019**

31,0 x 4,5 mm
Silicon



ScR **141163**

31,6 x 35,14 x 25,25 mm
Steel body with PTFE layer

kg 0,09

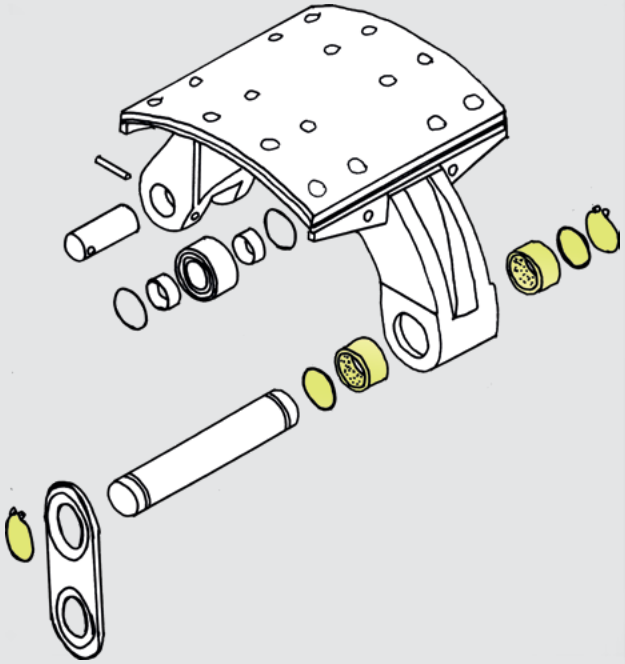

LPGRS	08/2016 →
GPR	04/2004 - 2018
94 - 164	06/1995 - 12/2004

80 - 145, 81 - 146, 82 - 142, 93 - 143

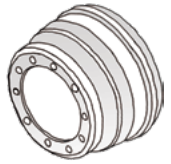

2 /

310050

S - camshaft

ScR 1340859

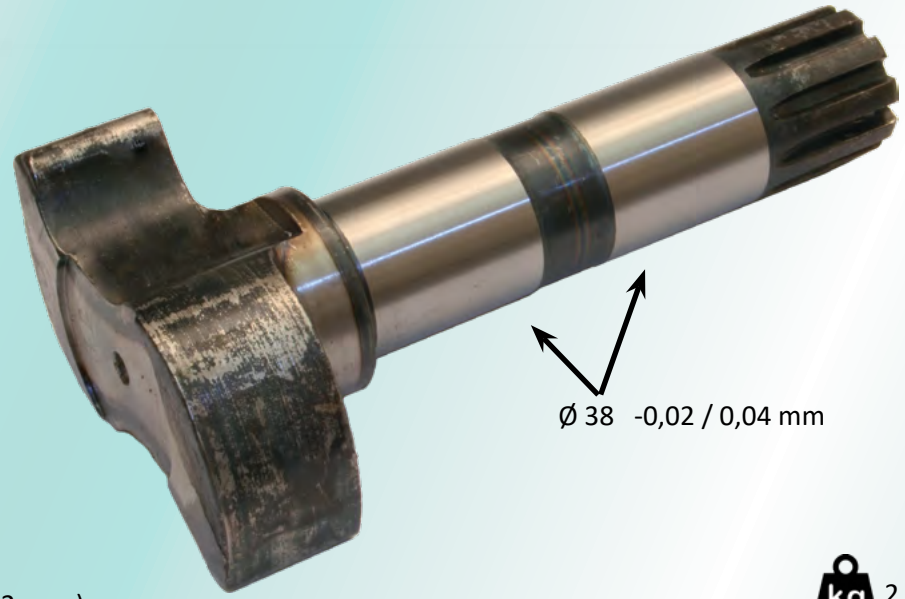

Total length = 199 (+/- 2 mm)

kg 2,43

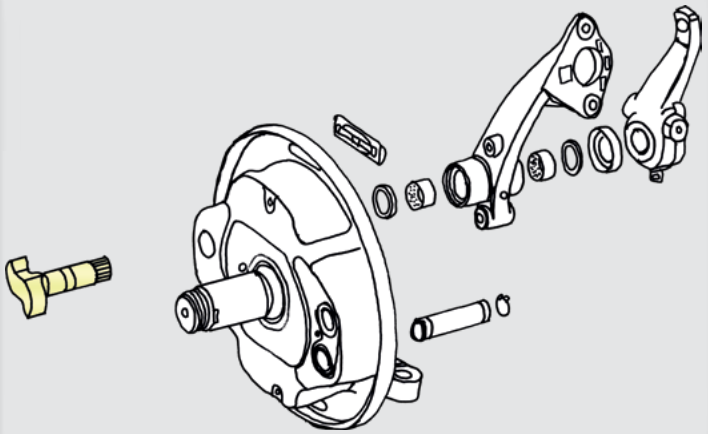

7” - 8" (178 mm - 93 mm)

LPGRS 08/2016 →

GPR 04/2004 - 2018

94, 114, 124, 144, 164

93, 113, 143

310051

S - camshaft

ScR 1340860

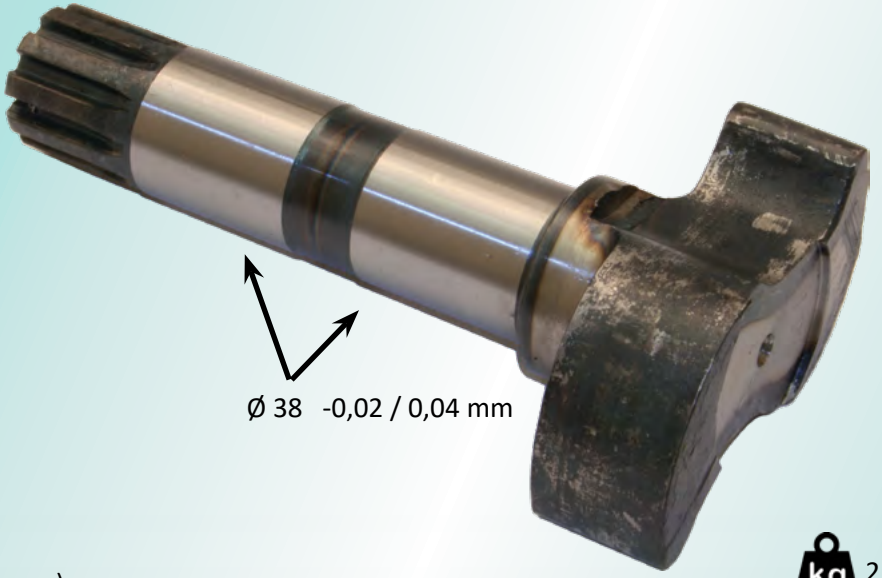

Total length = 199 (+/- 2 mm)

kg 2,43

310054

S - camshaft

ScR

2076771
1342747

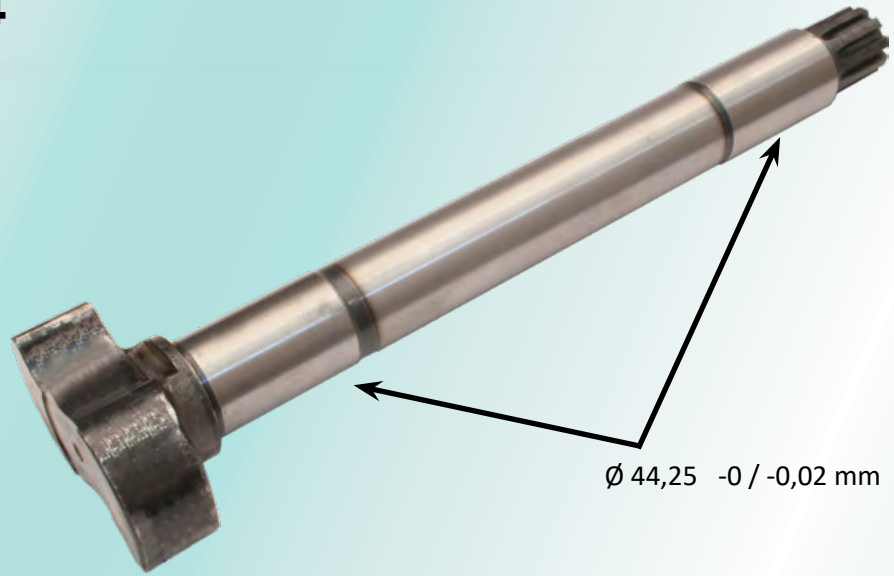

Total length = 472 (+/- 2 mm)

kg 6,0

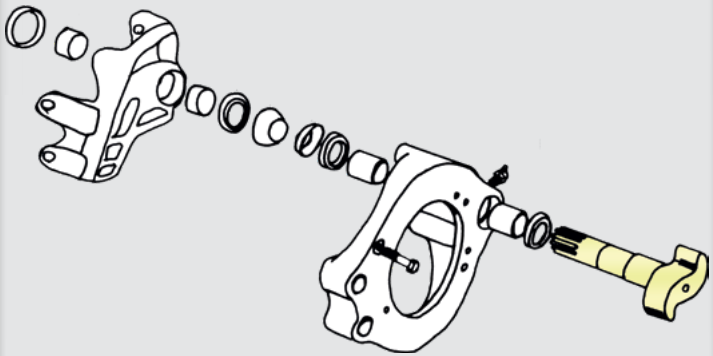



8" (203 mm)



LPGRS 08/2016 →

GPR 04/2004 - 2018

94, 114, 124, 144, 164

93, 113, 143

310055

S - camshaft

ScR

2076770
1342748

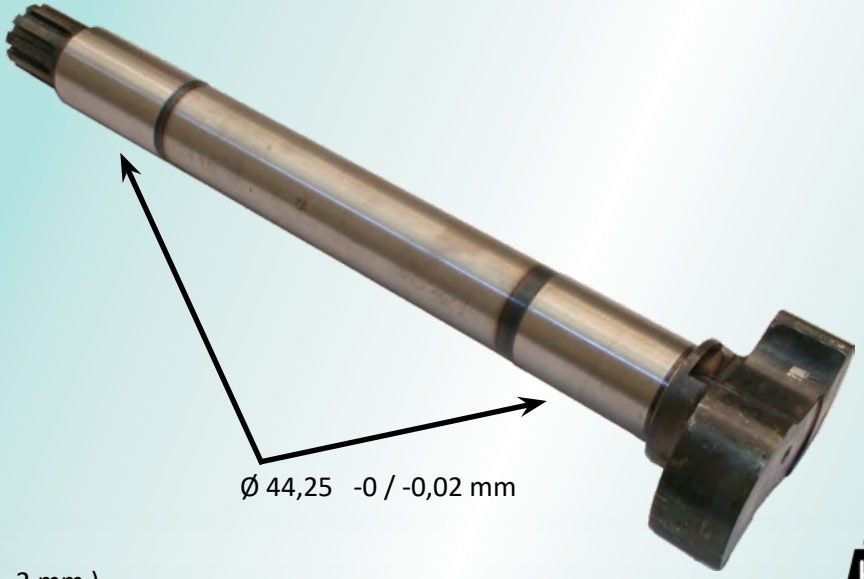

Total length = 472 (+/- 2 mm)

kg 6,0

310056

S - camshaft

ScR 1342745

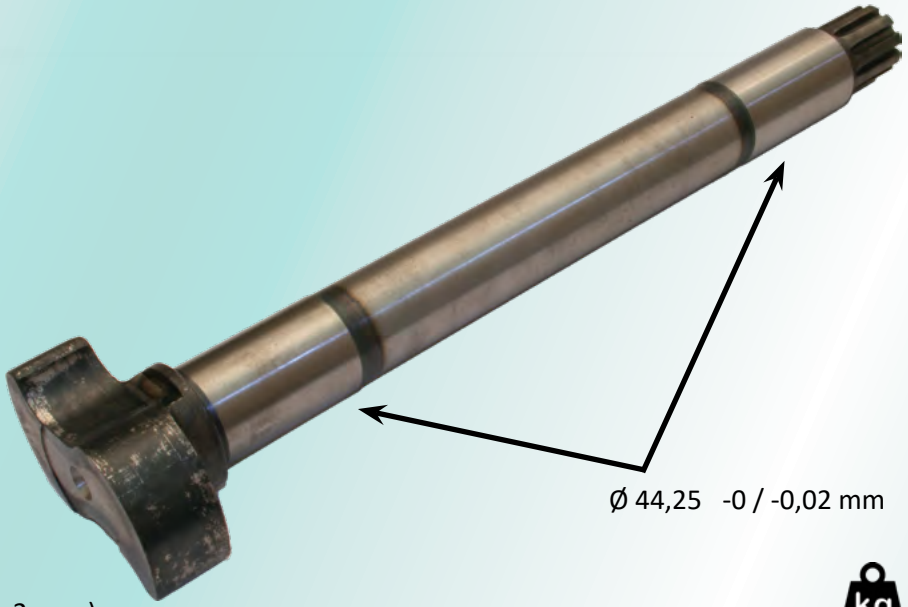

Total length = 452 (+/- 2 mm)

kg 5,7

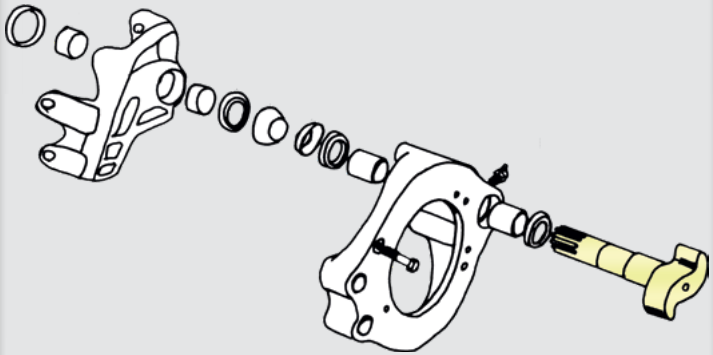



10" (254 mm)



LPGRS 08/2016 →

GPR 04/2004 - 2018

94, 114, 124, 144, 164

93, 113, 143

310057

S - camshaft

ScR 1342746

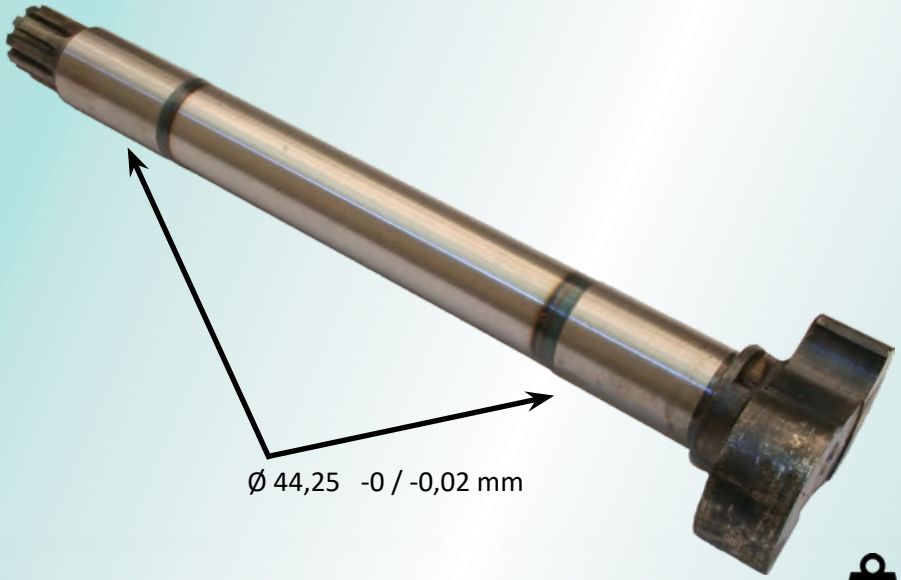

Total length = 452 (+/- 2 mm)

kg 5,7

310230

Checking cover

ScR 229840

Material:
Steel + Spring steel



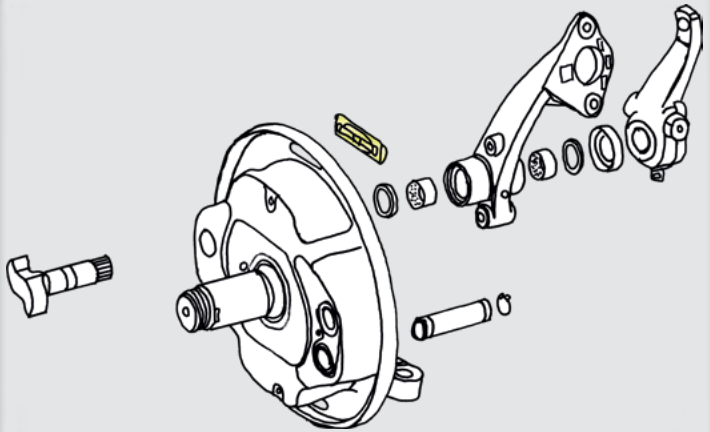

kg 0,04

Suits for all Scania brake shields with drum brakes

LPGRS	08/2016 →	
GPR	04/2004 2018	
94 - 164	06/1995 - 12/2004	
82 - 142,	93 - 143	

93, 113, 82, 92, 112

KN, 94, 114, 124

Тормозные пыльники изготовлены из заранее оцинкованной стали толщиной в 1,5 мм, и поэтому они лучше защищены от коррозии, чем например покрашенные, или оцинкованные после изготовления пыльники.

Our brake shields are made of 1,5 mm thick zinc / steel alloy material, which withstands corrosion much better than painted / zinc-coated shields.

Jarrukilpemme ovat tehty etukäteen sinkatusta 1,5 mm paksuisesta teräksestä, joka kestää korroosiota paremmin kuin esimerkiksi maalatut ja jälkikäteen sinkatut.

310144

Brake shield

ScR 1387098

Material: Steel

Painted with plastic spray

Ø ID: 118 mm
Ø OD: 224 mm
Hight: 54 mm



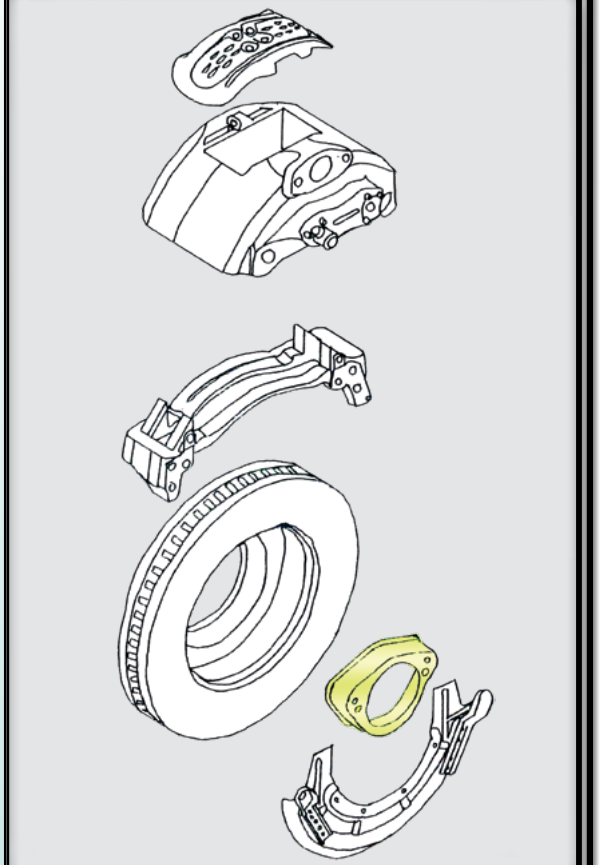

kg 0,67

LPGRS GPR	08/2016 → 04/2004 - 2018
94 - 164	05/1995 - 01/2005

KN	11/2005→
94, 114, 124	10/1997 - 11/2006

310714

Yoke assy

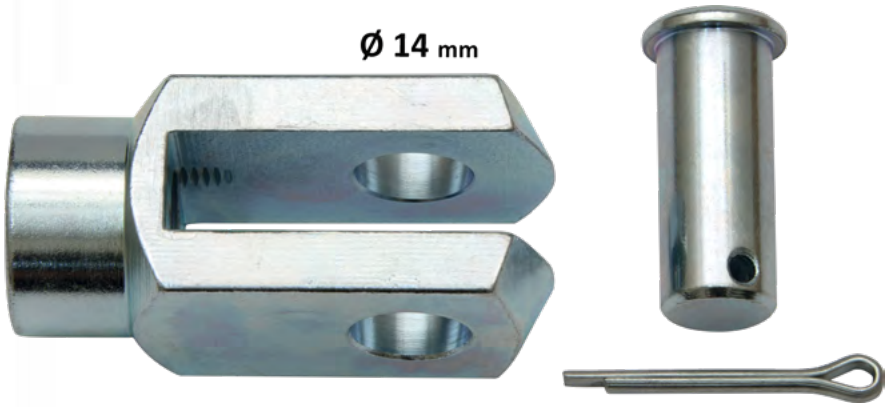

kg 0,35

310713

Yoke pin

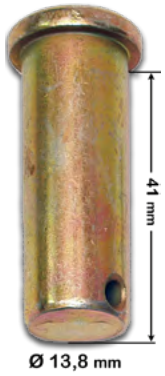

kg 0,05

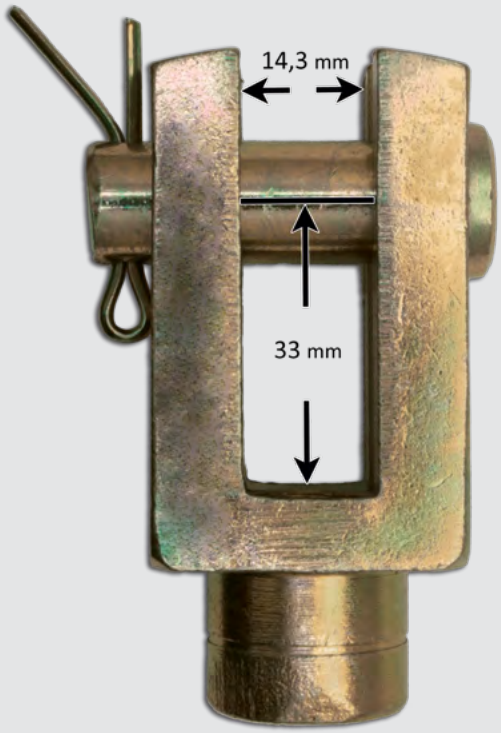

M16 x 1,5 mm

310716

Yoke assy

ScR 1104213 280654

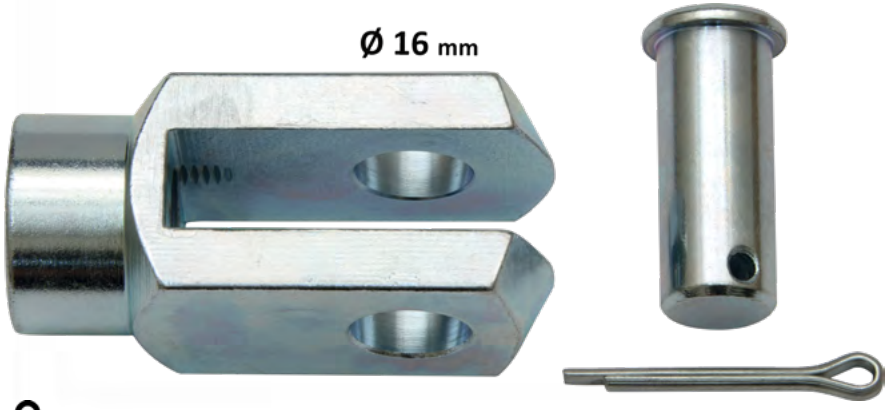

kg 0,35

310715

Yoke pin

ScR 808269 280652

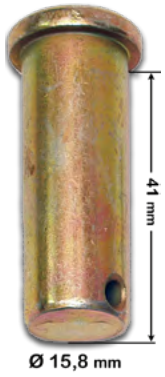

kg 0,08

Suitable nut M16 x 1,5:

ScR 815117



310420

ABS - valve

ScR	OER Wabco
1453761	472 195 097 0
1518589	472 195 018 0
1307040	472 195 004 0
328855	

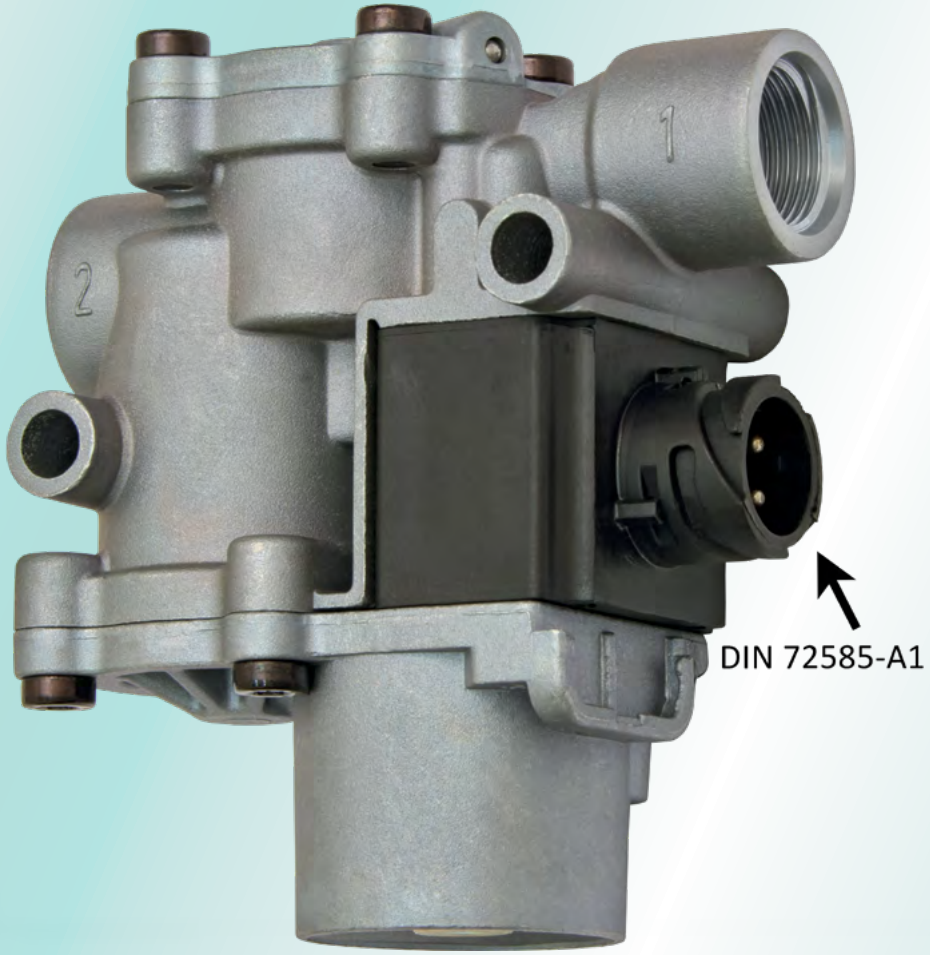

kg 0,68

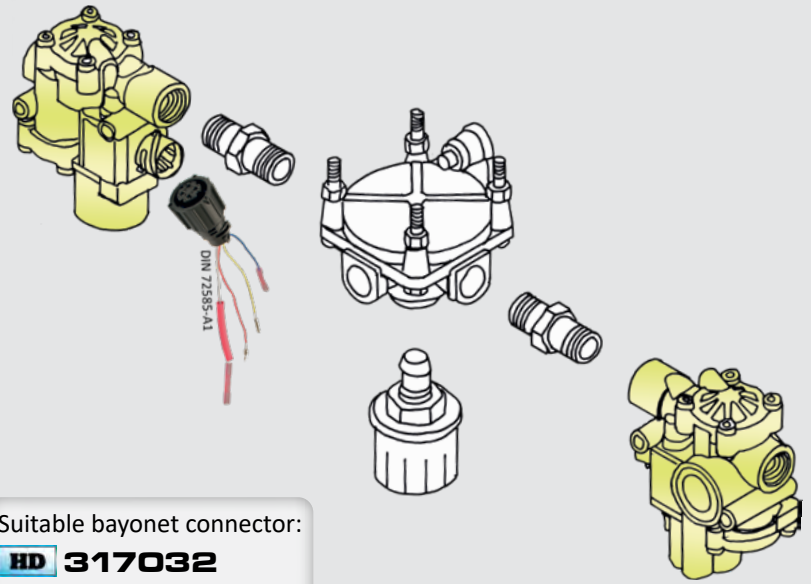

Suitable bayonet connector:

HD 317032

16



DIN 72585-A1



LPGRS 08/2016→

GPR 04/2004 - 2018

94, 114, 124, 144, 164



KN



94, 114, 124

The valve suits also for following vehicles if there is a DIN-72585-A1 twist coupler:

Клапан подходит также к следующим транспортным средствам при наличии в них DIN- 72585-A1 поворотного соединителя:

Volvo	VoR	20516342
Volvo	VoR	1079666
Man	ManR	81.52452.6007
Mercedes	MBR	004 429 88 44
Wabco	OER	472 195 097 0
Wabco	OER	472 195 018 0

310240

Clamp band

ScR **2437422**

Dimensions:

Thickness: 1,8 mm
Width: 40 mm
Length: 754 mm

Material:

Steel



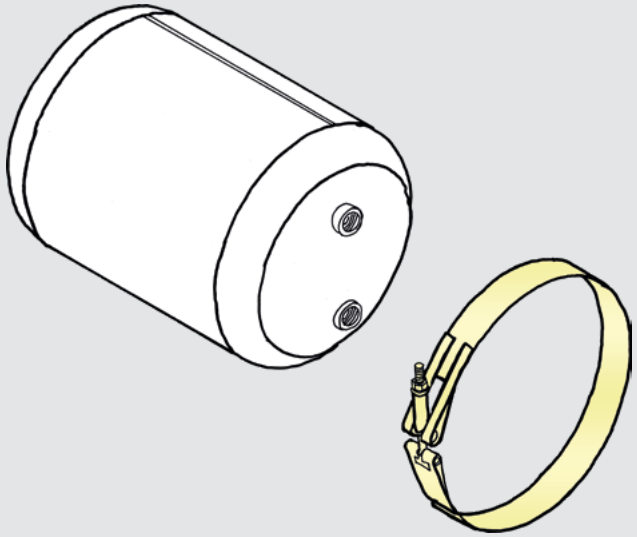

For more specific air tank locations,
see separate air tank location info pages.

LPGRS	09/2016 →		Y - locations
B6x2	B6x2*4	B6x4	Y
B6x2	A6x4		Y
4 x 4	6 x 6		Y
8x2/4	8x4*4		Y

kg ?

Suitable insulation rubbers: HD 310273, 310274

310241

Clamp band

ScR 2020613

Dimensions:

Thickness: 1,8 mm
Width: 40 mm
Length: 608 mm

Material:

Steel



kg 0,56

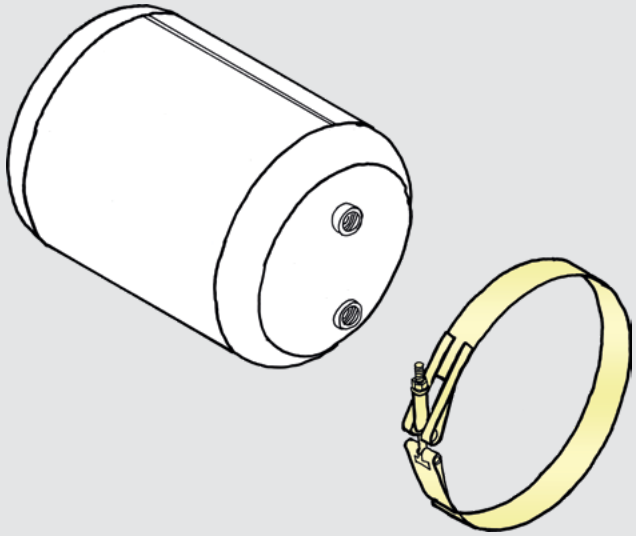

For more specific air tank locations,
see separate air tank location info pages.

LPGRS	09/2016 →	M - locations
A6x2	A6x4	M 1-2
6x2/2	6x2/4	M 1-2
8x2/4	8x4*4	M 1
10x4*6		M 1-2

GPR 04/2004 - 2018

Suitable insulation rubber: HD 310270

310242

Clamp band

ScR

1391743
1386663

Dimensions:

Thickness: 1,8 mm
Width: 40 mm
Length: 650 mm

Material:

Steel



kg 0,56

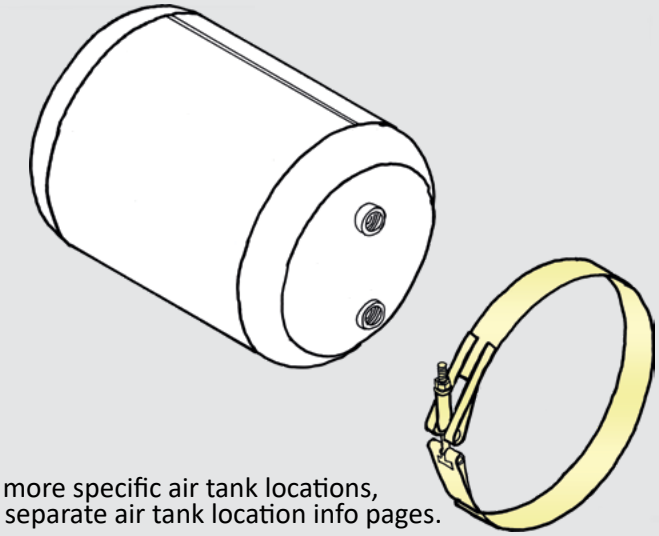

For more specific air tank locations, see separate air tank location info pages.

LPGRS	09/2016 →		F G Q NXL - locations
8x2/4	8x4*4		G 1-2
8x2	8x4	8x2*6	G 1-2
10x4*6			G 1-2
B6x2	Bx2*4	B6x4	Q 2
A6x2	A6x4		Q 2
8x2/4	8x4*4		Q 2
8x2	8x4	8x2*6	Q 2
8x2	8x4	8x2*6	NXL 1-2-3
10x4*6			NXL 1-2-3

GPR	2004 - 2018
94 - 164	1994 - 2008

Suitable insulation rubbers: HD 310270, 310273

310244

Clamp band

ScR

1391742

1355687 +
2497093

Material:
Steel

Dimensions:

Thickness: 2,0 mm
Width: 40 mm
Length: 870 mm



kg 0,75

LPGRS	09/2016 →		Locations
4x2			A 1 - 4
B6x2	B6 x 2*4	B6 x 4	A 1 - 4
A6x2	A6 x 4		A 1 - 2
6x2/2	6 x 2/4		A 1 - 2
4x4	6 x 6		A 1 - 4
8x2/4	8x4*4		A 1 - 4
4x2			B 1 - 4
B6x2	B6x2*4	B6x4	B 1 - 4
A6x2	A6x4		B 1 - 2
4x4	6x6		B 1 - 2
8x2	8x4	8x2*6	B 1 - 4
4x2			D 1 - 4
B6x2	B6x2*4	B6x4	D 1 - 6
4x4	6x6		D 1 - 2
4x2			E 1 - 4
B6x2	B6x2*4	B6x4	E 1 - 6
A6x2	A6x4		E 1 - 2
6x2/2	6x2/4		E 1 - 2
4x4	6x6		E 1 - 2
8x2/4	8x4*4		E 1 - 6
8x2	8x4	8x2*6	E 1 - 4
10x4*6			E 1 - 4
B6x2	B6x2*4	B6x4	F 1
A6x2	A6x4		F 1
6x2/2	6x2/4		F 2
8x2/4	8x4*4		F 1 - 2
10x4*6			F 1 - 2
4x4	6x6		H 1 - 2
B6x2	B6x2*4	B6x4	L
A6x2	A6x4		L
A6x2	A6x4		R
4x2			S 2 - 4
B6x2	B6x2*4	B6x4	S 1 - 4
A6x2	A6x4		S 1 - 4
6x2/2	6x2/4		S 2 - 3
4x4	6x6		S 1 - 4
8x2/4	8x4*4		S 1 - 4
8x2	8x4	8x2*6	S 1 - 2
10x4*6			S 1
4x2			U 1 - 2
B6x2	B6x2*4	B6x4	U 1 - 2
4x4	6x6		U 1 - 2
8x2/4	8x4*4		U 1 - 2
8x2	8x4	8x2*6	U 1 - 2
10x4*6			U 1 - 2
4x2			X 1 - 2
B6x2	B6x2*4	B6x4	X 2

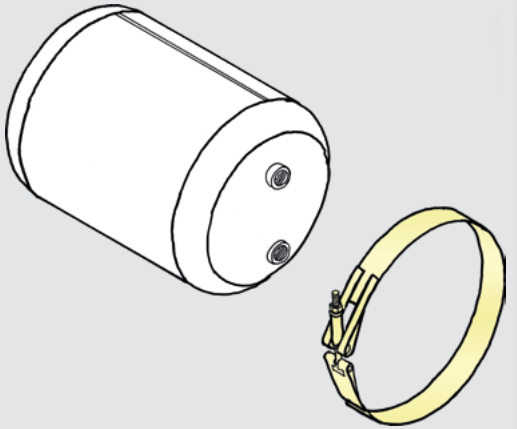

For more specific air tank locations, see separate air tank location info pages.

GPR	2004 - 2018
94 - 164	1994 - 2010

KN	2004 →
94, 114, 124	1994 - 2010

Suitable insulation rubbers:

HD 310270, 310272, 310273

310246

Clamp band

ScR

2218575 +
1729578

Material:
Steel



Dimensions:

Thickness: 1,7 mm
Width: 40 mm
Length: 895 mm

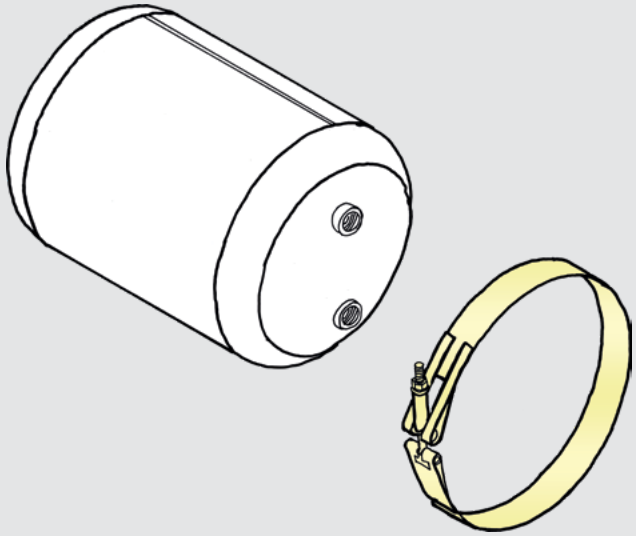

For more specific air tank locations,
see separate air tank location info pages.

LPGRS	09/2016 →	V - locations
4x2		V 1 - 2
A6x2	A6x4	V 1
6x2/2	6x2/4	V 1
4x4	6x6	V 2

GPR 2004 - 2018

kg ?

Suitable insulation rubber: HD 310270

310247

Clamp band

ScR 2127355

Material:
Painted steel

Dimensions:

Thickness: 1,7 mm
Width: 40 mm
Length: 960 mm
Length of screw: 195 mm



kg ?

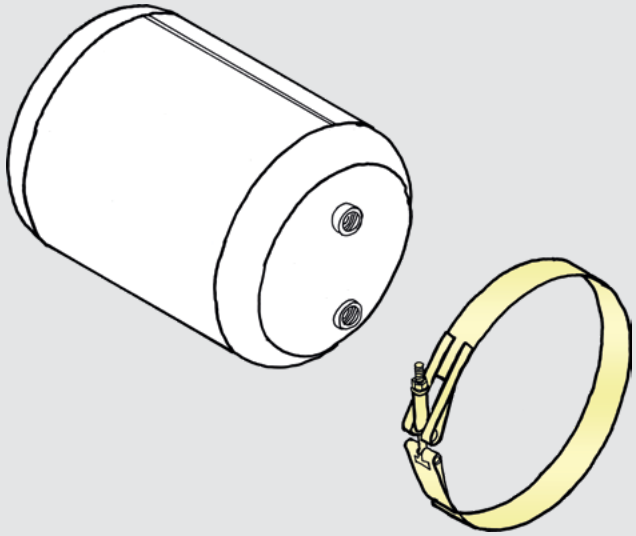

For more specific air tank locations,
see separate air tank location info pages.

LPGRS	09/2016 →	V - locations
4x2		V 1 - 2
A6x2	A6x4	V 1
6x2/2	6x2/4	V 1

GPR 2004 - 2018

Suitable insulation rubbers: HD 310270, 310273

310248

Clamp band

ScR 1455775

Material:
Steel

Dimensions:

Thickness: 1,8 mm
Width: 40 mm
Length: 1020 mm



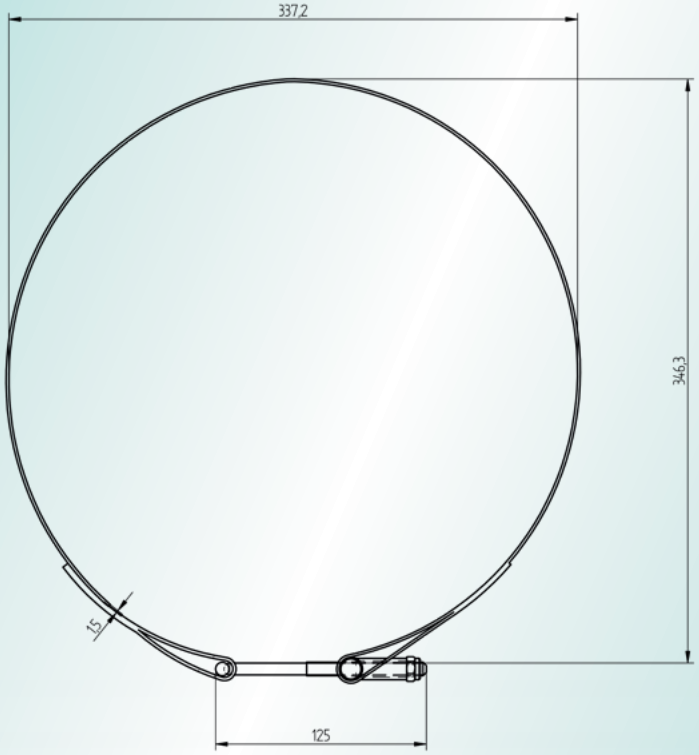

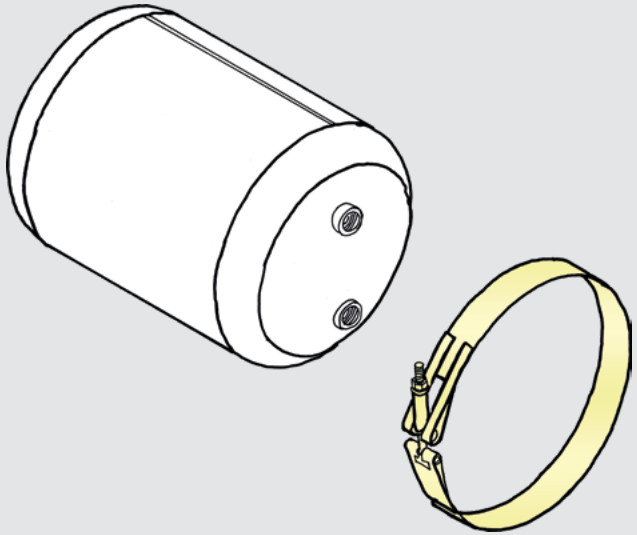

For more specific air tank locations,
see separate air tank location info pages.

LPGRS	09/2016 →	V - locations
4x2		V 1 - 2
A6x2	A6x4	V 1
6x2/2	6x2/4	V 1
4x4	6x6	V 2
GPR	2004 - 2018	

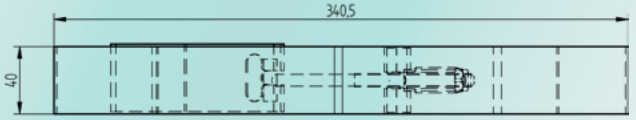

kg 0,86

Suitable insulation rubbers: HD 310270, 310273

310259

Clamp band

ScR 2361151

Material:
Steel

Dimensions:

Thickness: ? mm
Width: ? mm
Length: ? mm



kg ?

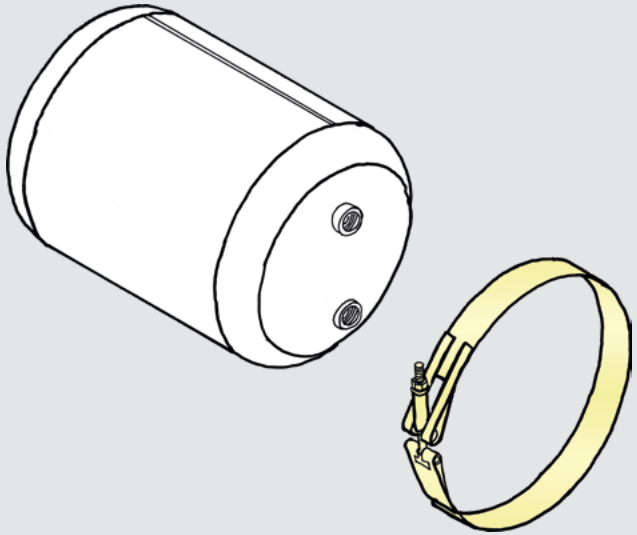

For more specific air tank locations,
see separate air tank location info pages.

LPGRS	09/2016 →		N - locations
4x2			N 1 - 2
B6x2	B6x2*4	B6x4	N 1 - 2
8x2/4	8x4*4		N 1 - 2
8x2	8x4	8x2*6	N 1 - 2
10x4*6			N 1 - 2

Suitable insulation rubbers: HD 310270, 310273

310260

Clamp band

ScR **1724863**

Material:
Steel

Dimensions:

Thickness: 1,7 mm
Width: 50 mm
Length: 550 mm



kg 0,71

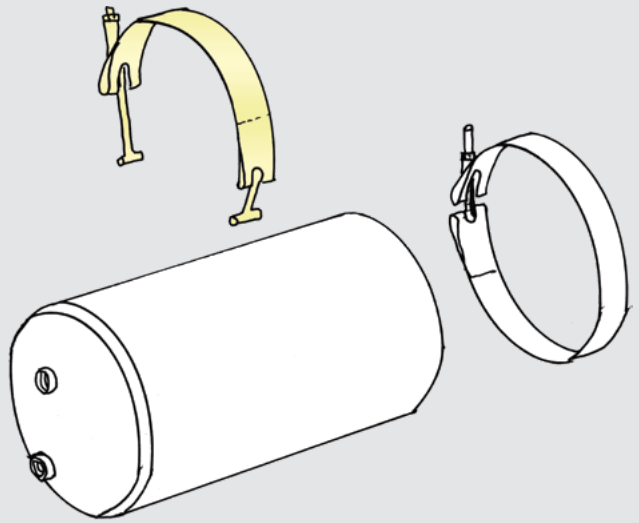

For more specific air tank locations,
see separate air tank location info pages.

LPGRS	09/2016 →		J - locations
4x2			J 1 - 2
B6x2	B6x2*4	B6x4	J 1 - 2
A6x2	A6x4		J 1 - 2
6x2/2	6x2/4		J 1 - 2
8x2	8x4	8x2*6	J 1 - 2

GPR 2004 - 2018

Suitable insulation rubber: HD 310270

310262

Clamp band

ScR

2213380 +
2135122

Material:

Painted steel



Dimensions:

Thickness: 1,7 mm
Width: 50 mm
Length: 490 mm
Length of screw: ? mm

kg 0,68

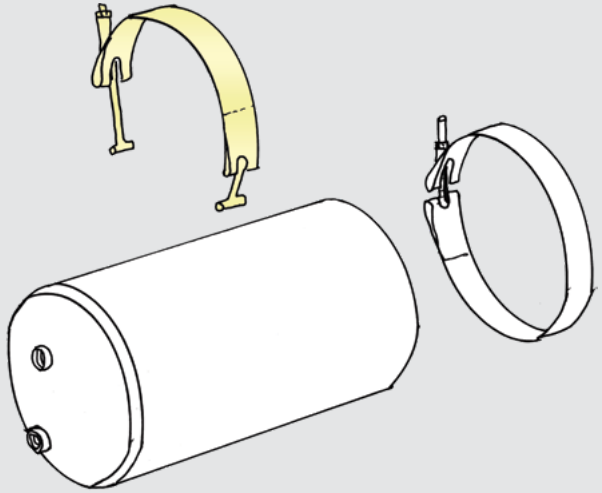

GPR 2004 - 2018

Suitable insulation rubber: HD 310270

310263

Clamp band

ScR **2014112**



Material:

Painted steel

Dimensions:

Thickness: 2,0 mm
Width: 50 mm
Length: 350 mm
Length of screw: ? mm

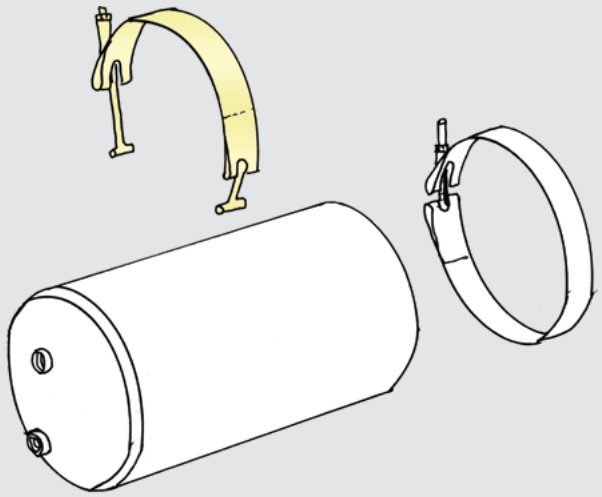

GPR 2004 - 2018

kg 0,59

Suitable insulation rubber: HD 310270

310266

Clamp band

ScR

1724862
1391956

Material:

Painted steel

Dimensions:

Thickness: 1,7 mm
Width: 50 mm
Length: 530 mm
Length of screw: 205 mm

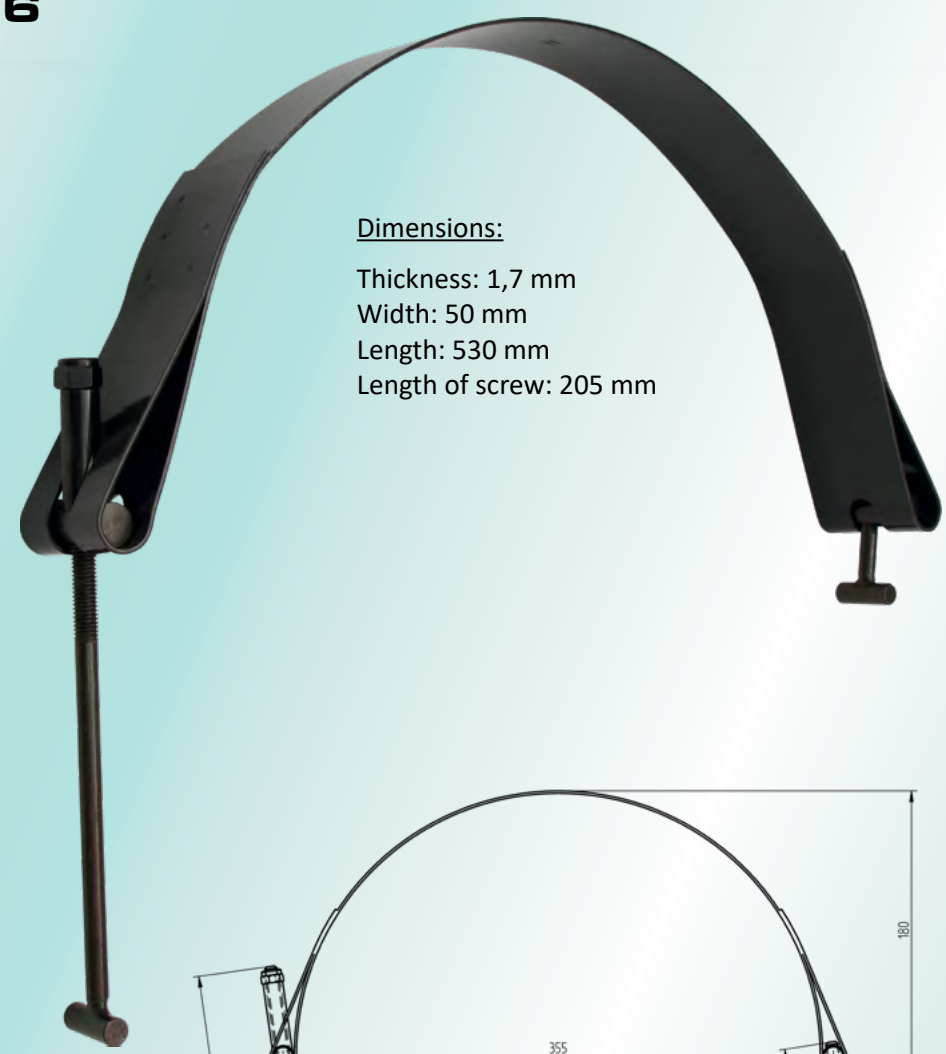

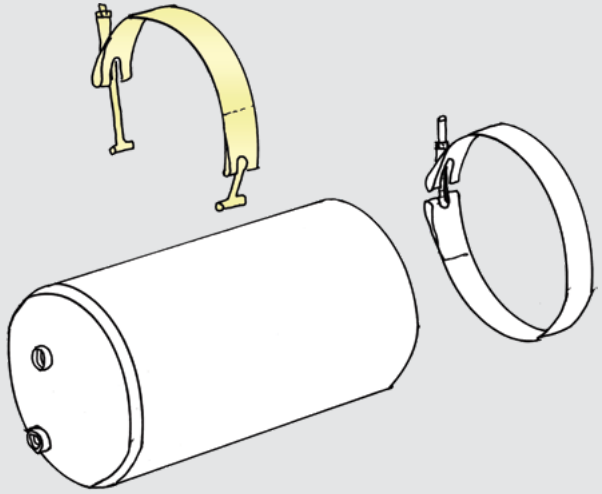

GPR	2004 - 2018
94 - 164	1994 - 2008



kg 0,7

Suitable insulation rubbers: HD 310270, 310273

310267

Clamp band

ScR 2204492

Material:

Painted steel



Dimensions:

Thickness: 1,9 mm
Width: 50 mm
Length: 470 mm
Length of screw: ? mm

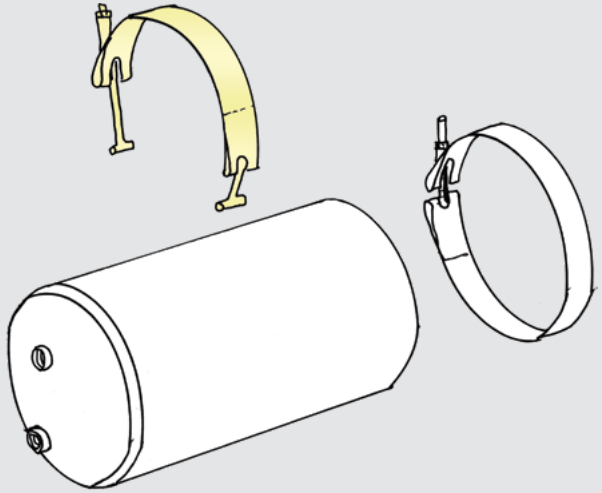

GPR 2004 - 2018

kg 0,66

Suitable insulation rubber: HD 310270

310269

Clamp band

ScR

1724860
1427797

Material:

Painted steel



Dimensions:

Thickness: 1,7 mm
Width: 50 mm
Length: 380 mm
Length of screw: ? mm

kg 0,82

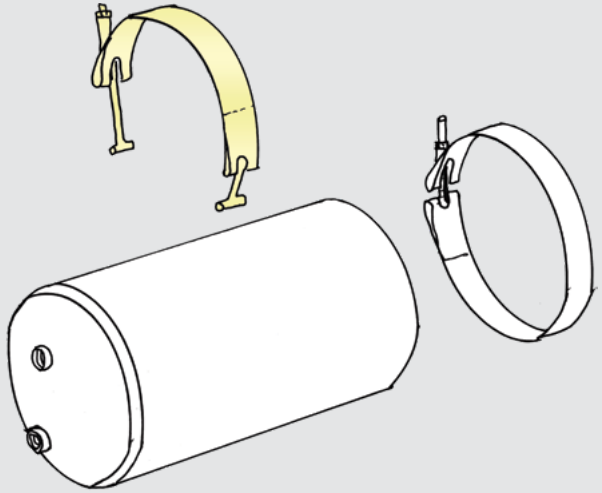

GPR	2004 - 2018
94 - 164	1994 - 2008

94, 114, 124	→07/2002

Suitable insulation rubber: HD 310273

Suitable insulation rubber: ScR 1373482
647 x 100 x 1 mm with Ø50 mm hole.

Air tank locations

HEAVY DUTY HD - PARTS
© Copyright
www.hd-parts.fi

LPGRS 09/2016 → Air tank locations 4 x 2 chassis

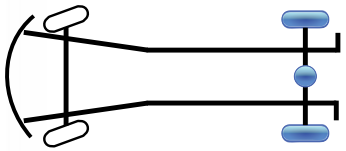 4 x 2	- Front axle - Driving rear axle	- Etuakseli - Vetävä taka-akseli	- Передняя ось - Ведущая задняя ось

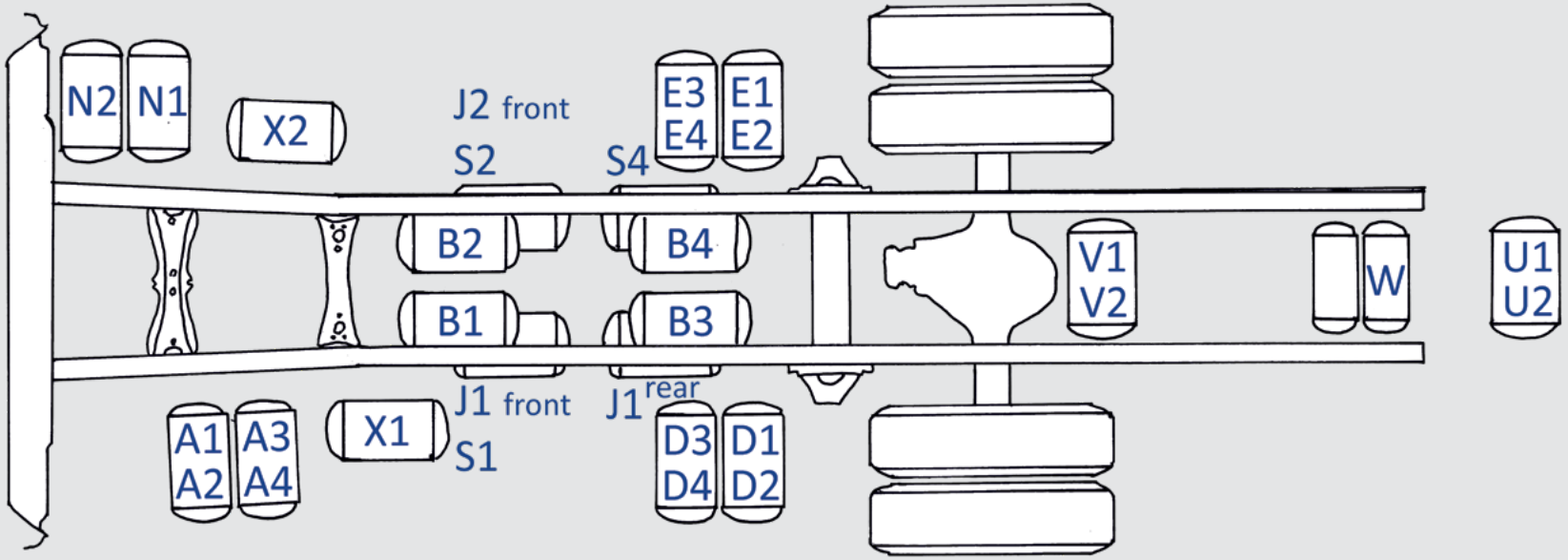

LPGRS 09/2016 → Air tank locations B6x2 B6x2*4 B6x4 chassis (B = Air suspension front and rear)

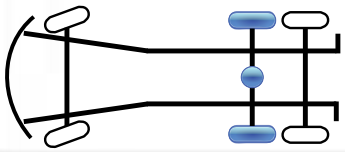 6 x 2	- Front axle - Driving rear axle - Non steered tag axle	- Etuakseli - Vetävä taka-akseli - Ei ohjattava teliakseli	- Передняя ось - Ведущая задняя ось - Неуправляемая подъёмная ось
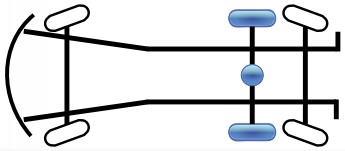 6x2*4	- Front axle - Driving rear axle - Steered tag axle	- Etuakseli - Vetävä taka-akseli - Ohjattava teliakseli	- Передняя ось - Ведущая задняя ось - Управляемая подъёмная ось
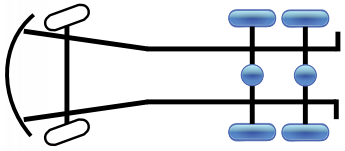 6 x 4	- Front axle - 1. driving rear axle - 2. driving rear axle	- Etuakseli - 1. vetävä taka-akseli - 2. vetävä taka-akseli	- Передняя ось - 1. ведущая задняя ось - 2. ведущая задняя ось

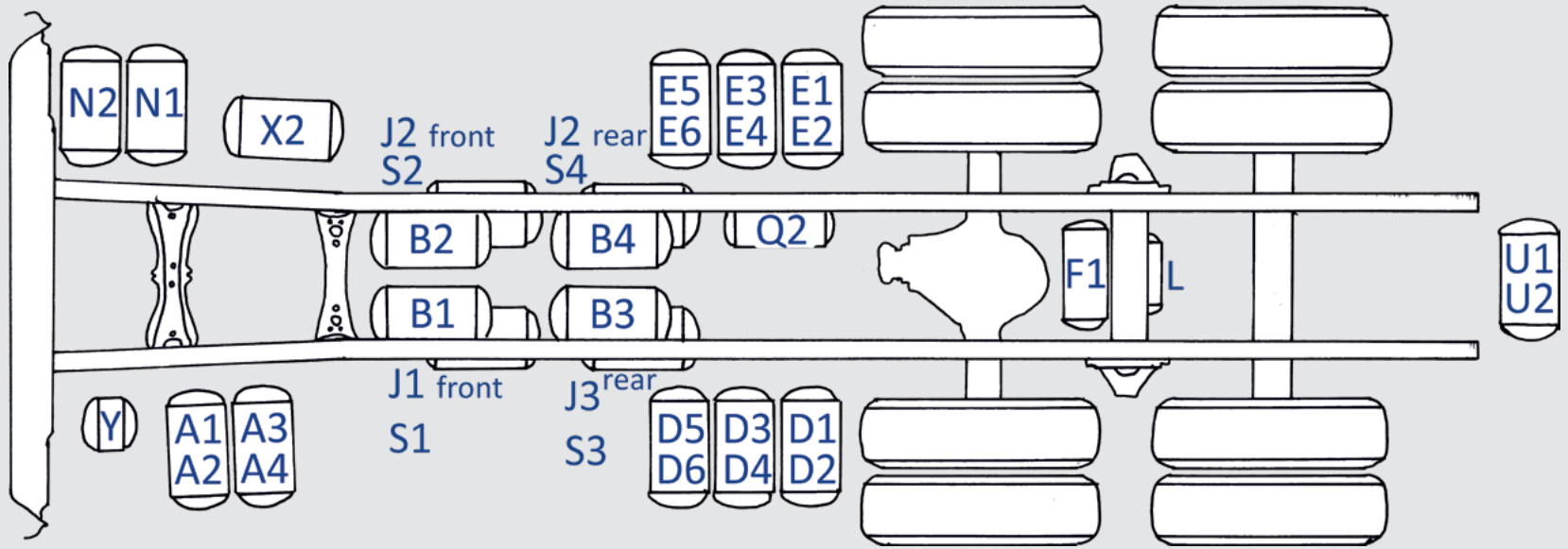

LPGRS 09/2016 → Air tank locations A6x2 A6x4 chassis (A = Leaf spring suspension front and air suspension rear)

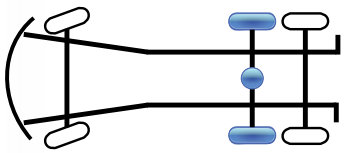 6 x 2	- Front axle - Driving rear axle - Non steered tag axle	- Etuakseli - Vetävä taka-akseli - Ei ohjattava teliakseli	- Передняя ось - Ведущая задняя ось - Неуправляемая подъёмная ось
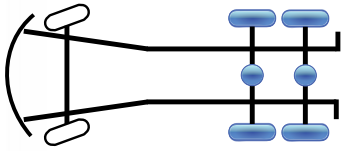 6 x 4	- Front axle - 1. driving rear axle - 2. driving rear axle	- Etuakseli - 1. vetävä taka-akseli - 2. vetävä taka-akseli	- Передняя ось - 1. ведущая задняя ось - 2. ведущая задняя ось

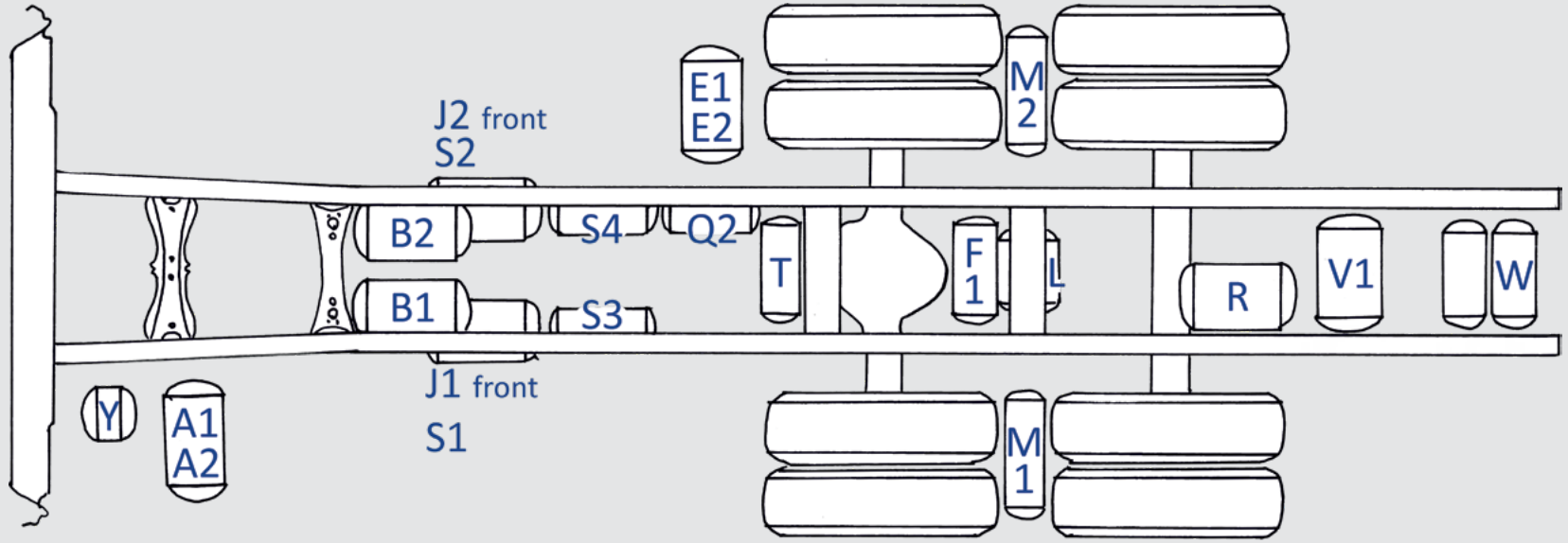

Air tank locations

© Copyright
www.hd-parts.fi

LPGRS 09/2016 → Air tank locations 6x2/2 6x2*4 chassis

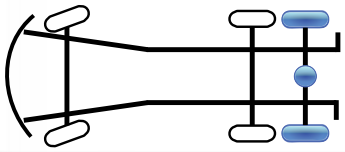 6x2/2	- Front axle - Non steered tag axle - Driving rear axle	- Etuakseli - Ei ohjattava teliakseli - Vetävä taka-akseli	- Передняя ось - Неуправляемая подъёмная ось - Ведущая задняя ось
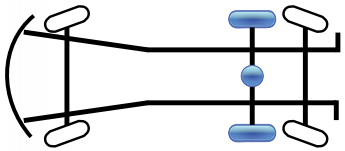 6x2*4	- Front axle - Driving rear axle - Steered tag axle	- Etuakseli - Vetävä taka-akseli - Ohjattava teliakseli	- Передняя ось - Ведущая задняя ось - Управляемая подъёмная ось

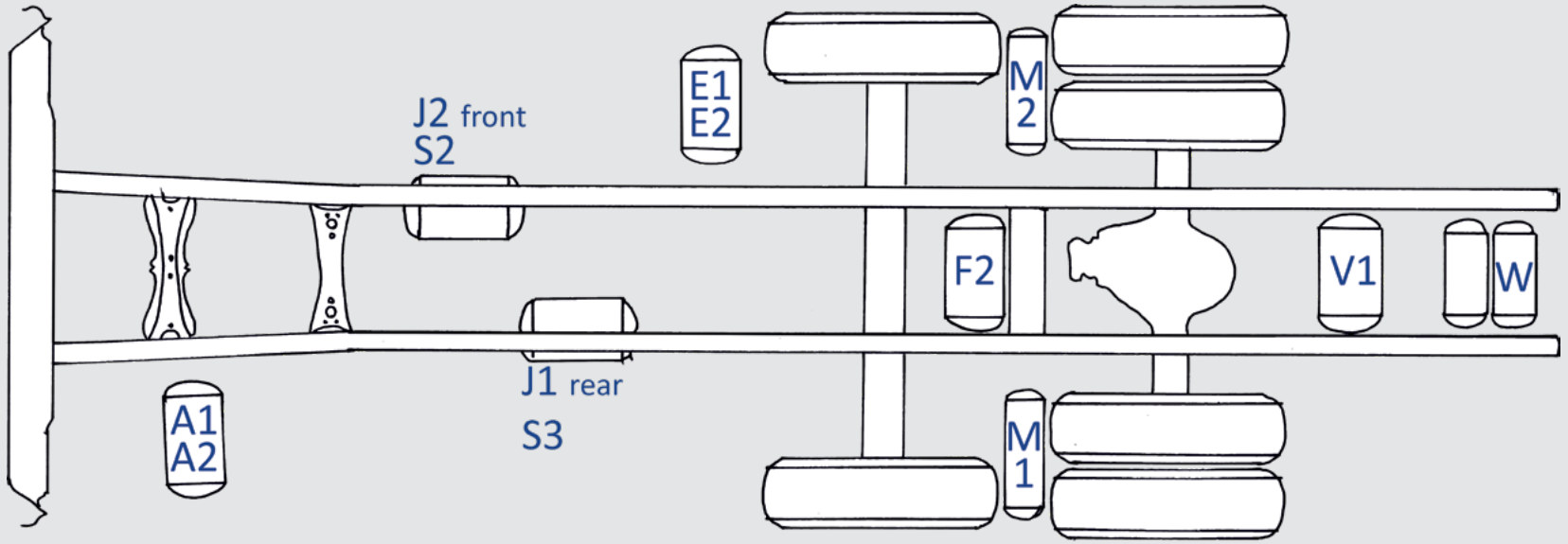

LPGRS 09/2016 → Air tank locations 4x4 6x6 chassis

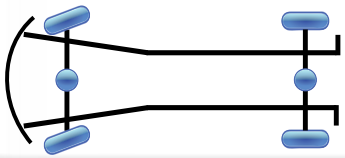 4 x 4	- Driving front axle - Driving rear axle	- Vetävä etuakseli - Vetävä taka-akseli	- Ведущая передняя ось - Ведущая задняя ось
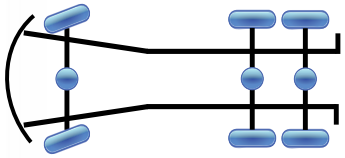 6 x 6	- Driving front axle - 1. driving rear axle - 2. driving rear axle	- Vetävä etuakseli - 1. vetävä taka-akseli - 2. vetävä taka-akseli	- Ведущая передняя ось - 1. ведущая задняя ось - 2. ведущая задняя ось

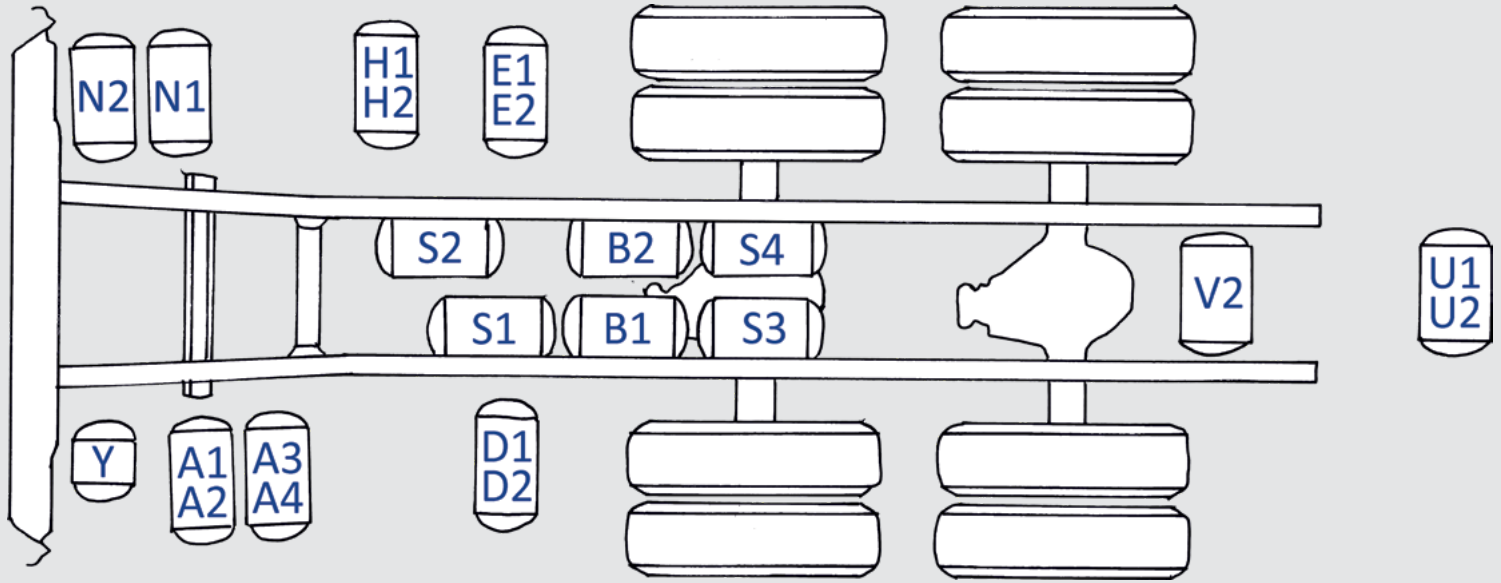

LPGRS 09/2016 → Air tank locations 8x2/4 8x4*4 chassis

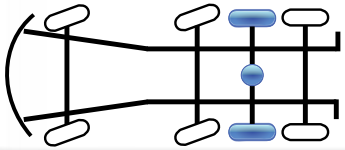 8x2/4	- Front axle - Steered tag axle - Driving rear axle - Non steered tag axle	- Etuakseli - Ohjattava teliakseli - Vetävä taka-akseli - Ei ohjattava teliakseli	- Передняя ось - Управляемая подъёмная ось - Ведущая задняя ось - Неуправляемая подъёмная ось
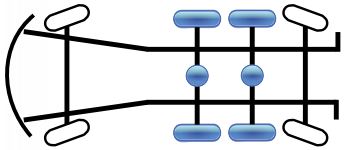 8x4*4	- Front axle - 1. driving rear axle - 2. driving rear axle - Steered tag axle	- Etuakseli - 1. vetävä taka-akseli - 2. vetävä taka-akseli- - Ohjattava teliakseli	- Передняя ось - 1. ведущая задняя ось - 2. ведущая задняя ось - Управляемая подъёмная ось

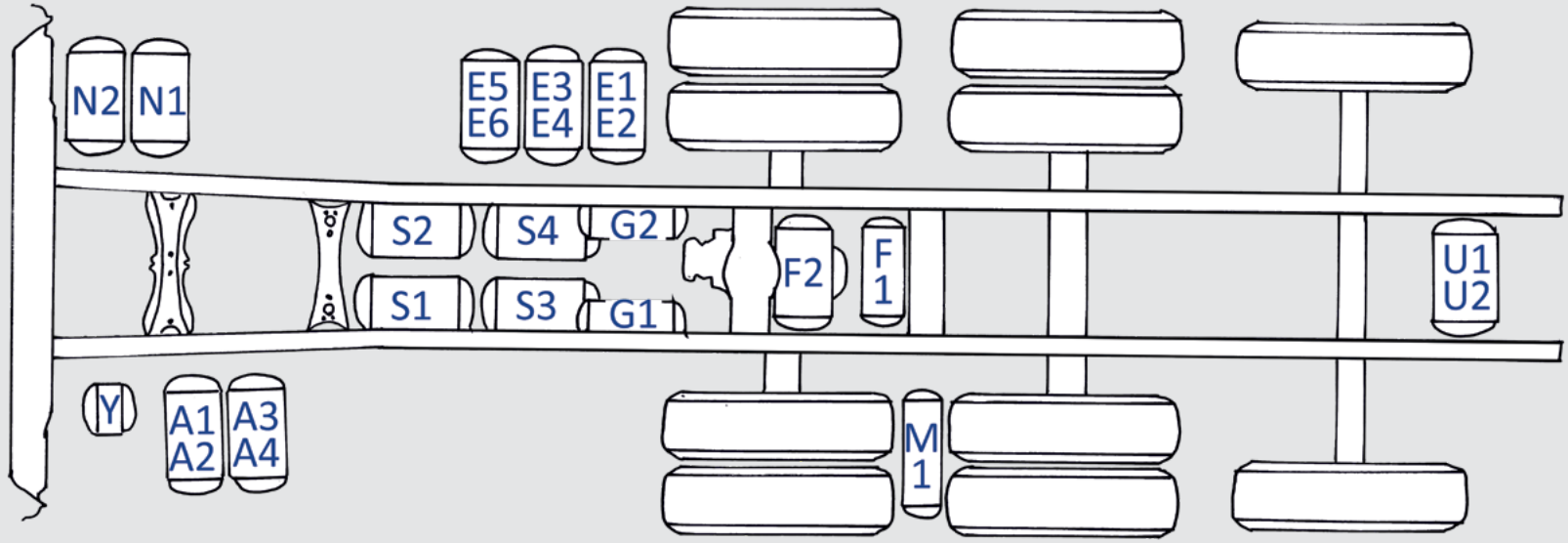

LPGRS 09/2016 → Air tank locations 8x2 8x4 8x2*6 chassis

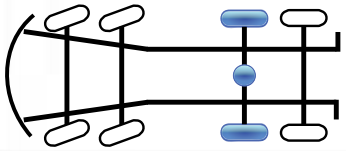 8 x 2	- 1. front axle - 2. front axle - Driving rear axle - Non steered tag axle	- 1. etuakseli - 2. etuakseli - Vetävä taka-akseli - Ei ohjattava teliakseli	- 1. передняя ось - 2. передняя ось - Ведущая задняя ось - Неуправляемая подъёмная ось
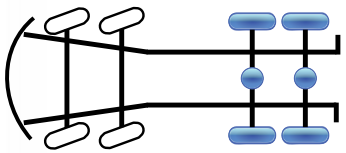 8 x 4	- 1. front axle - 2. front axle - 1. driving rear axle - 2. driving rear axle	- 1. etuakseli - 2. etuakseli - 1. vetävä taka-akseli - 2. vetävä taka-akseli	- 1. передняя ось - 2. передняя ось - 1. ведущая задняя ось - 2. ведущая задняя ось
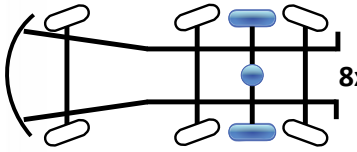 8x2/*6	- Front axle - Steered tag axle - Driving rear axle - Steered tag axle	- Etuakseli - Ohjattava teliakseli - Vetävä taka-akseli - Ohjattava teliakseli	- Передняя ось - Управляемая подъёмная ось - Ведущая задняя ось - Управляемая подъёмная ось

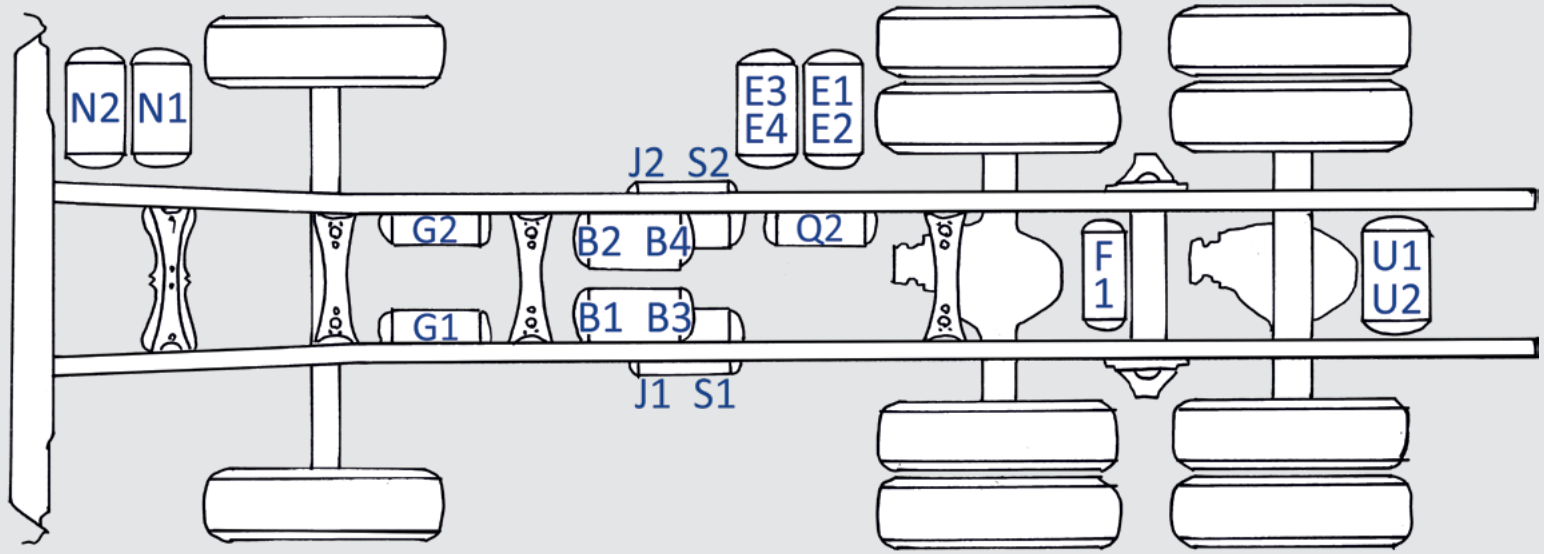

LPGRS 09/2016 → Air tank locations 10x4*6 chassis

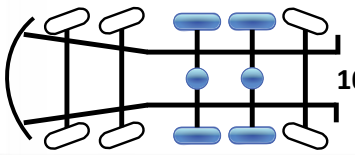 10x4*6	- 1. front axle - 2. front axle - 1. driving rear axle - 2. driving rear axle - Steered tag axle	- 1. etuakseli - 2. etuakseli - 1. vetävä taka-akseli - 2. vetävä taka-akseli - Ohjattava teliakseli	- 1. передняя ось - 2. передняя ось - 1. ведущая задняя ось - 2. ведущая задняя ось - Управляемая подъёмная ось

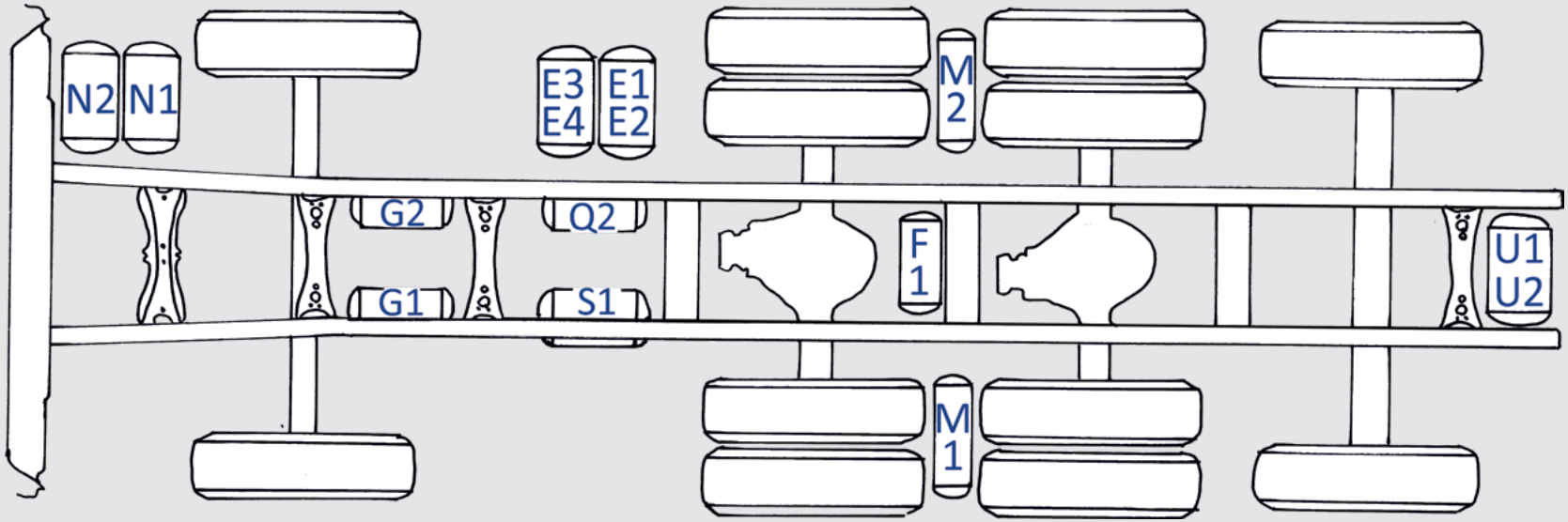

310272

Insulation rubber strip

ScR

1508622
482219

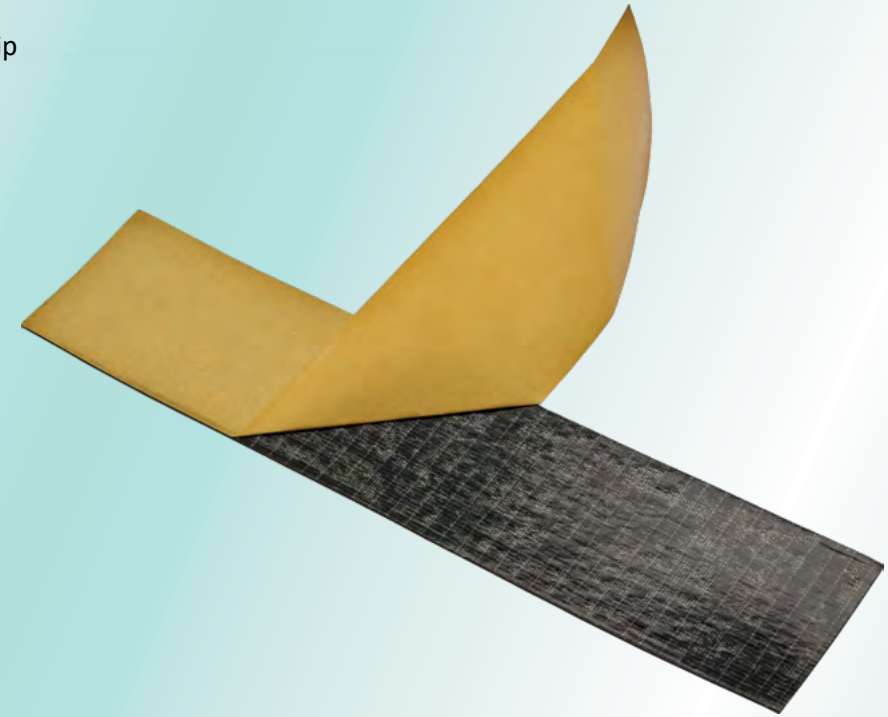

Materials:

NBR-rubber
Glue

Dimensions:

Thickness: 1,0 mm
Width: 50 mm
Length: 230 mm

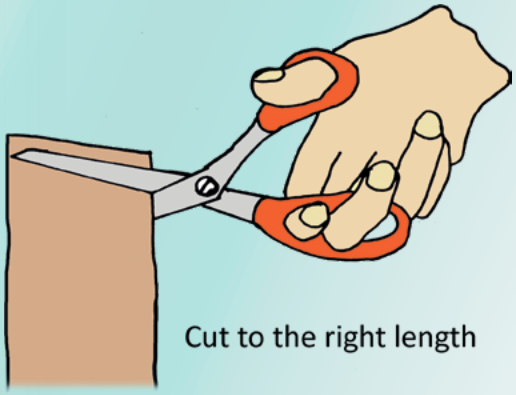

Cut to the right length

kg ?

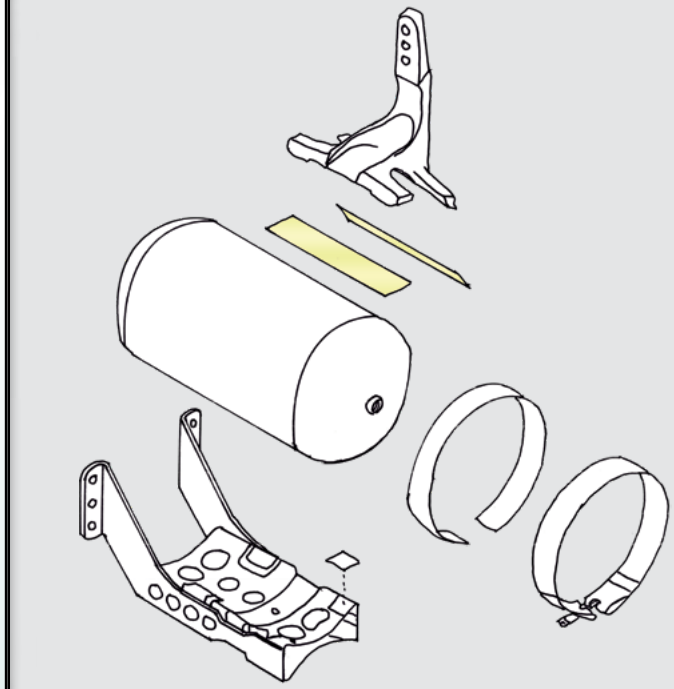

LPGRS	09/2016 →
GPR	2004 - 2018
94 - 164	1994 - 2008

KN	2004 →
94, 114, 124	1994 - 2010

03 Reductant tank SCR suspension.
10 Air tank
12 Level sensor
13 Steering cylinder

310270

Insulation rubber strip

ScR

1373483
1731555
1395905

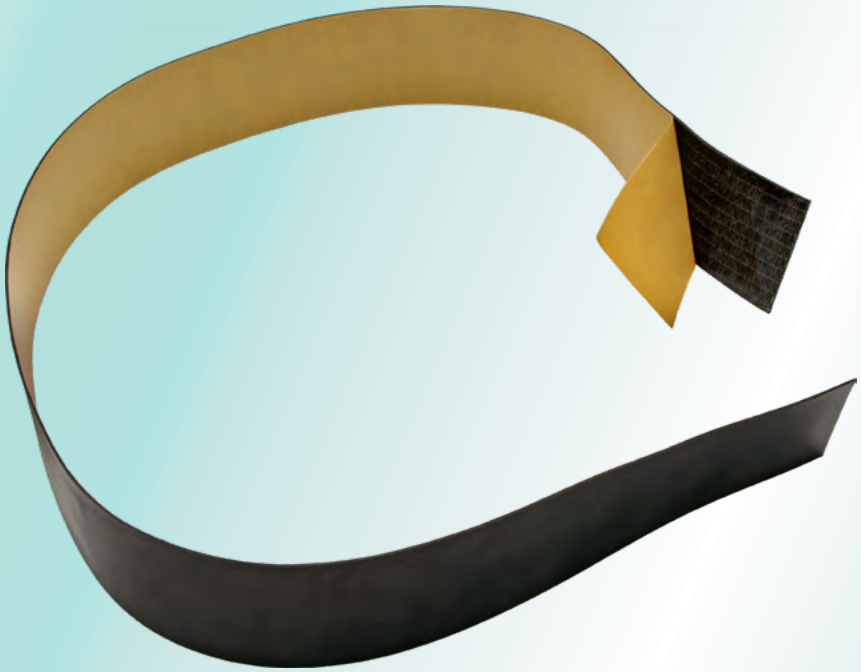

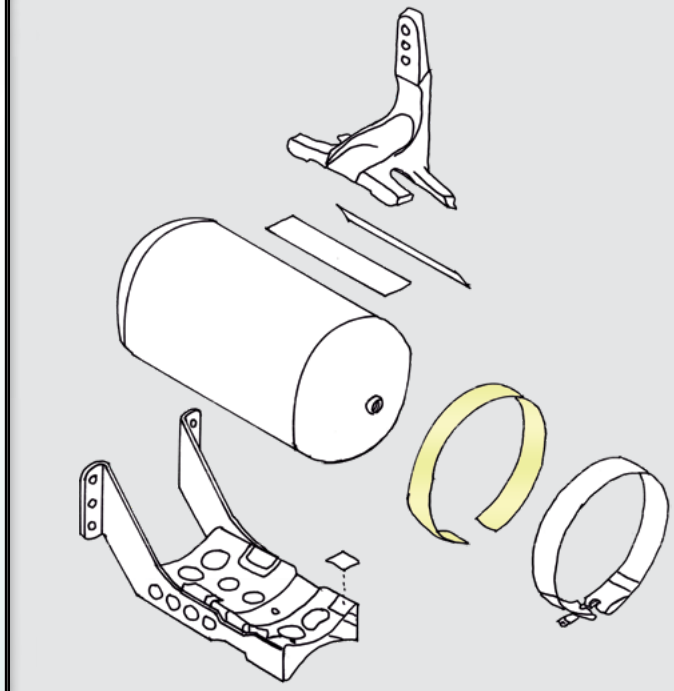

Materials:

NBR-rubber
Glue

Dimensions:

Thickness: 1,0 mm
Width: 50 mm
Length: 1000 mm

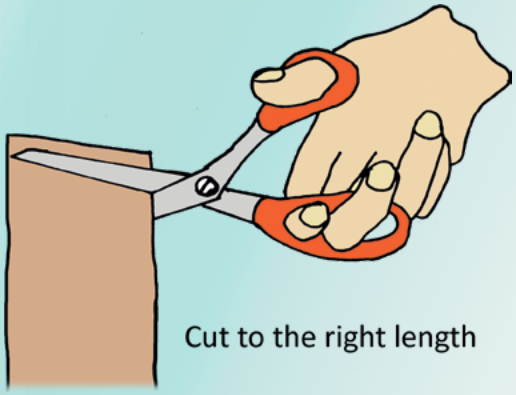

Cut to the right length

kg ?

LPGRS	09/2016 →
GPR	2004 - 2018
94 - 164	1994 - 2008

KN	2004 →
94, 114, 124	1994 - 2010

310274

Insulation rubber strip

ScR **2537084**



Materials:

NBR-rubber
Paper / Glue

Dimensions:

Thickness: 1,0 mm
Width: 40 mm
Length: 800 mm

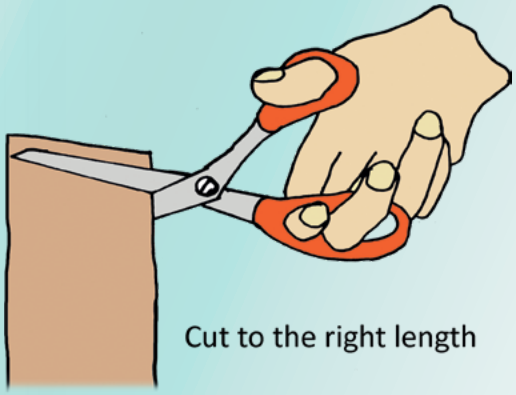

Cut to the right length

kg ?

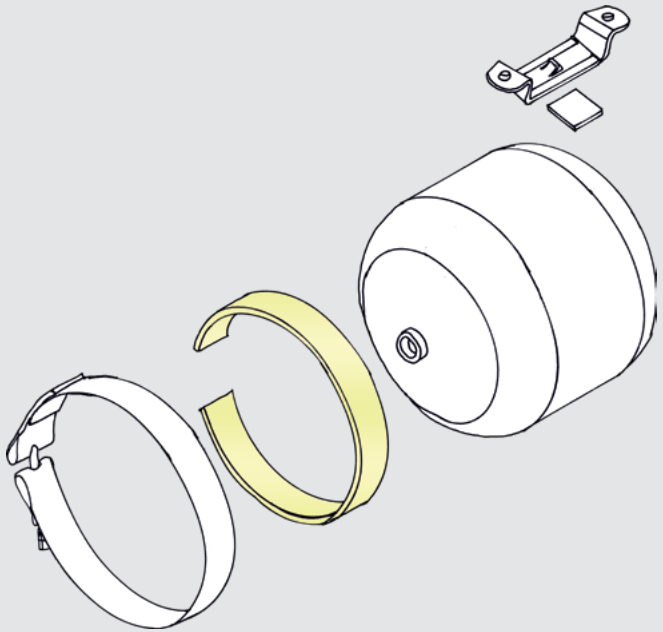

LPGRS | 09/2016 → | Y - locations

Suits with:

Clamp band	HD	310240
Insulation rubber strip	HD	310273

310273

Insulation rubber strip

ScR 1358279

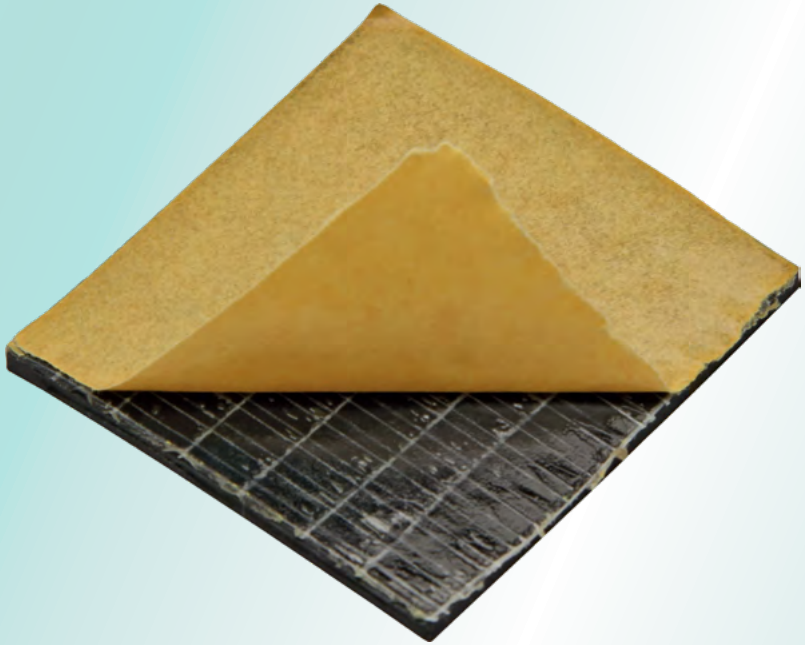

Materials:

NBR-rubber
Glue

Dimensions:

Thickness: 1,5 mm
Width: 36 mm
Length: 36 mm

kg ?



LPGRS	09/2016 →
GPR	2004 - 2018
94 - 164	1994 - 2008

03 Fuel + Exhaust
10 Air tank
18 Cab
19 Catwalk

Location codes:

T11	T12	front axle
T13	T14	rear axle
T28	T30	tag axle
T87	T88	2:nd front axle
T87	T88	Tag axle
T87	T88	Double-drive bogie axle x 2

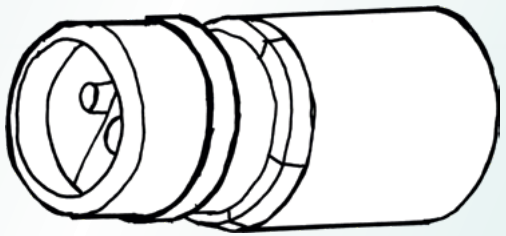

Canon, **male** plug

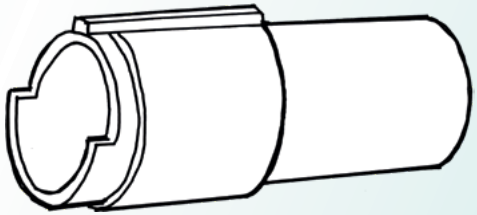

Canon, **female** plug

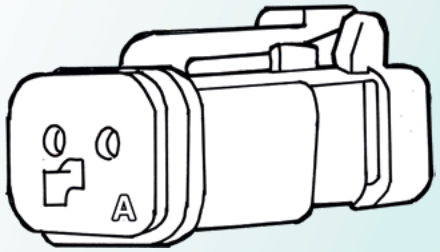

Deutsch, **A** plug

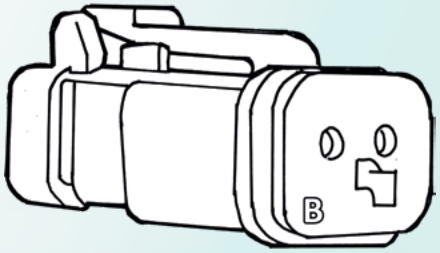

Deutsch, **B** plug

HD-no	Scania OE	Sensor head	Plug	Length mm	Wabco ref. no.
310434	1892054	straight I	Canon male	**1425**	441 032 908 0
310435	1892055	straight I	Canon male	**2670**	441 032 924 0
310429	1892049	straight I	Canon female	**1425**	441 032 909 0
310430	1892050	straight I	Canon female	**2670**	441 032 925 0
310437	1892057	straight I	Deutsch A	**1650**	441 032 952 0
310438	1892058	straight I	Deutsch B	**2675**	441 032 902 0
310439	1892059	straight I	Deutsch A	**3400**	441 032 903 0
310442	1892062	angled L	Canon male	**1150**	441 032 118 0
310431	1892051	angled L	Canon male	**1500**	441 032 870 0
310433	1892053	angled L	Canon male	**2675**	441 032 865 0
310427	1892047	angled L	Canon female	**1000**	441 032 867 0
310428	1892048	angled L	Canon female	**2675**	441 032 868 0
310436	1892056	angled L	Deutsch B	**2000**	441 032 872 0
310448	1892068	angled L	Deutsch A	**2800**	441 032 117 0



EBS - sensors for Scania Trucks (GPRT)



Front, **left**	Front, **right**	Rear, **left**	Rear, **right**	Tag, **left**	Tag, **right**
310431	310431	310434	310434	310448	310448
310436	310436	310437	310437	310437 ASA1000	310437 ASA1000
		310439	310439		
		310439	310442	310426 ASA1000	310426 ASA1000
		310427 Drum brake	310426 Drum brake		
		310438 First driven axle	310438 First driven axle	310448 ARA 760/820/900 ASA 700/1000	310448 ARA 760/820/900 ASA 700/1000
		310448 Double drive bogie	310448 Double drive bogie		



ABS - sensors for Scania Trucks (GPRT)



Front, **left**	Front, **right**	Rear, **left**	Rear, **right**	Tag, **left**	Tag, **right**
310434 GPR and possibly 94-164	310434 GPR and possibly 94-164	310427	310433	310427 6x2A ASA1000 6x4Z, 8x4Z, 6x6 AD1501P	310433 6x2A ASA1000 6x4Z, 8x4Z, 6x6 AD1501P
		310429	310433	310430	310435
				310428	310434

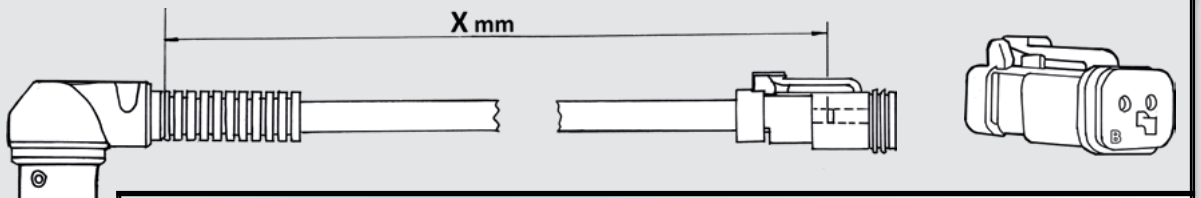

310426

EBS - sensor



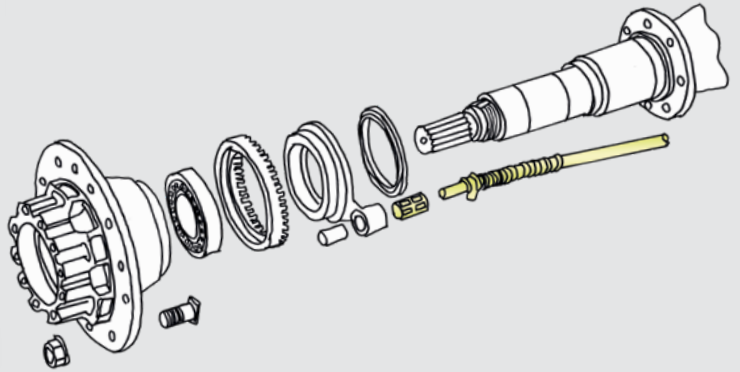

ScR Wabco R

2258810 -

Clearance product !







kg 0,22

GPR	04/2004 - 2018	T14	EBS

GPR	04/2004 - 2018	T28, T30	EBS

ASA 1000

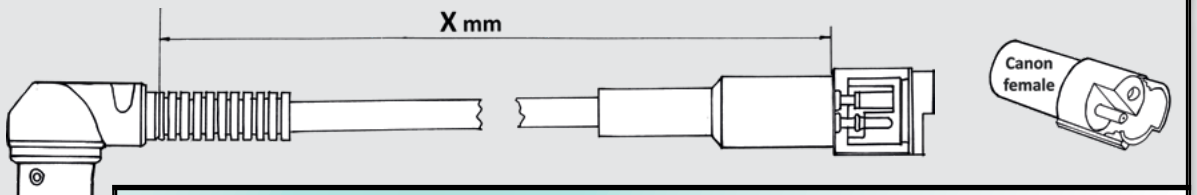

310427

EBS / ABS - sensor



ScR	Wabco R	
1892047	**-**	
1530690	**441 032 867 0**	1000 / 780 mm
1428446	**441 032 867 0**	1000 / 780 mm



kg 0,23





→ 310426
EBS



→ 310433
ABS



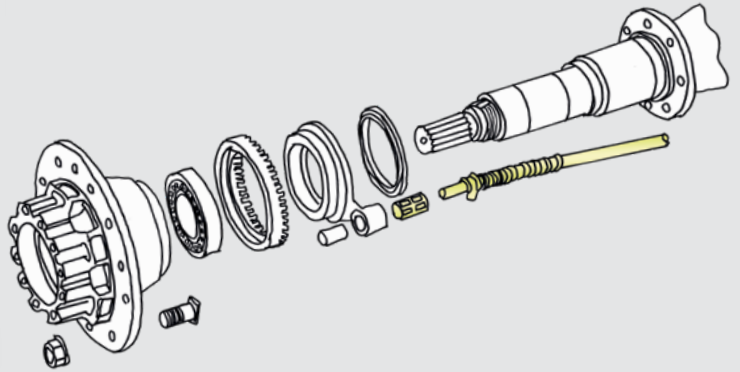

GPR	04/2004 - 2018	T13, T28	ABS
GPR	04/2004 - 2018	T13	EBS

94 - 164	06/1995 - 12/2004	T13, T28	ABS

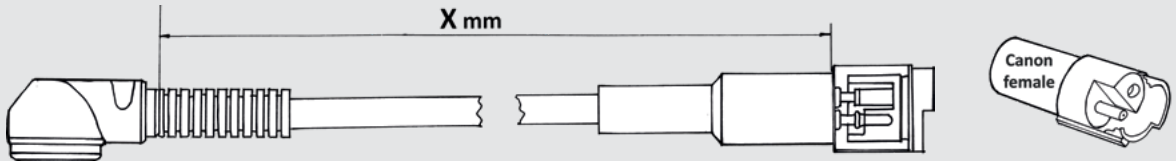

310428

ABS - sensor



ScR	Wabco R	
1892048	**-**	
1530692	**441 032 868 0**	2675 / 2450 mm
1530692	**441 032 886 0**	2540 / 500 mm
1530692	**441 032 887 0**	2150 / 1650 mm
1441274	**441 032 887 0**	2150 / 1650 mm
1438888	**441 032 886 0**	2540 / 500 mm
1428447	**441 032 868 0**	2675 / 2450 mm
1478402	**441 032 104 0**	1425 / 580 mm







kg 0,25

→ 310434



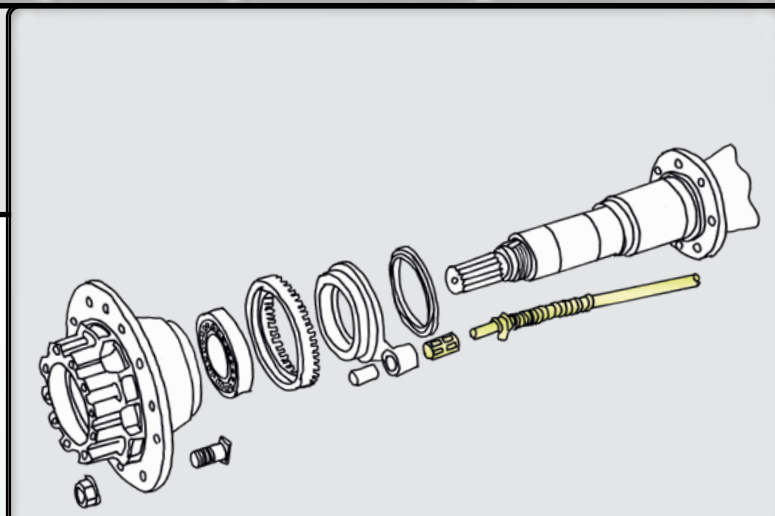

GPR	04/2004 - 2018	T28	ABS
94 - 164	06/1995 - 12/2004	T11, T13, T28	ABS
94, 114, 124	10/1997 - 11/2006	T11	ABS

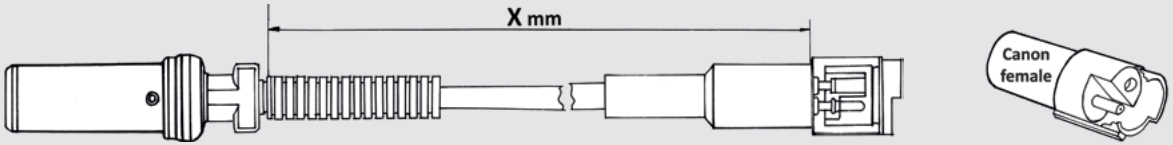

310429

ABS - sensor



ScR	Wabco R
1892049	**-**
1530693	**441 032 909 0**
1431119	**441 032 909 0**



kg 0,23





→ 310433



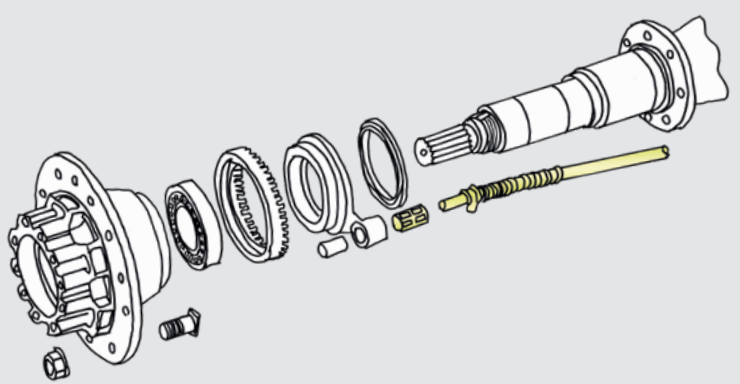

GPR	04/2004 - 2018	T13	ABS
94 - 164	06/1995 - 12/2004	T13, T28	ABS

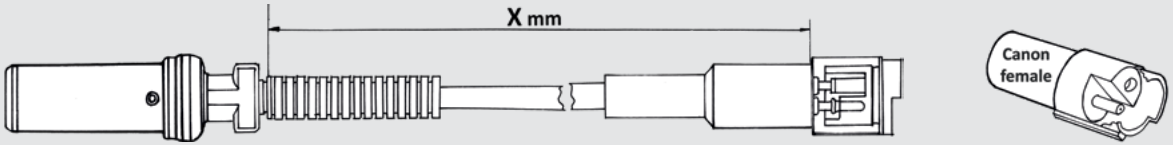

310430

ABS - sensor



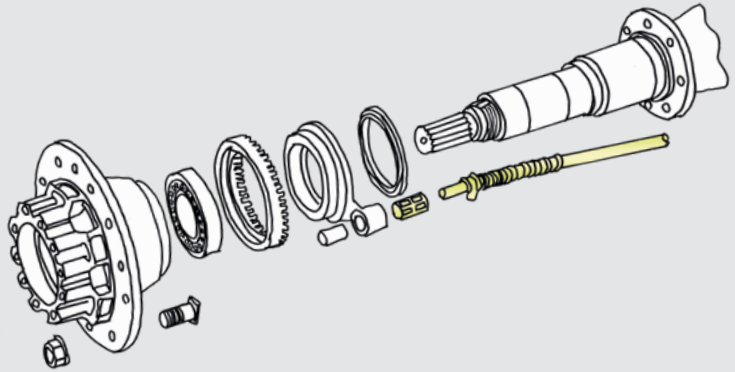

ScR	Wabco R	
1892050	**-**	
1530694	**441 032 925 0**	2670 / 1250 mm
1530694	**441 032 917 0**	2240 / 500 mm
1453598	**441 032 925 0**	2670 / 1250 mm
1441273	**441 032 917 0**	2240 / 500 mm



kg 0,23





→ 310435



GPR	04/2004 - 2018	T28	ABS
94 - 164	06/1995 - 12/2004	T13, T28	ABS

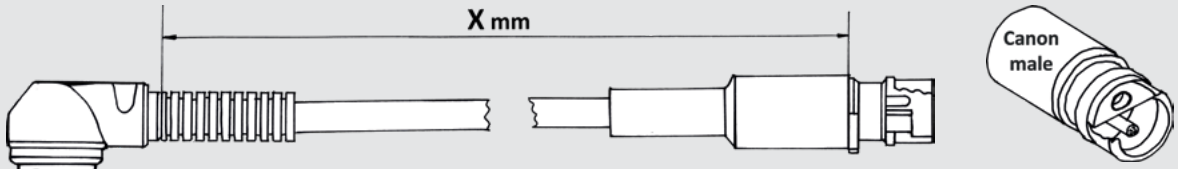

310431

EBS / ABS - sensor



ScR	Wabco R
1892051	-
1530696	441 032 870 0
1534527	441 032 870 0
1530695	441 032 864 0
1546395	441 032 118 0







kg 0,26

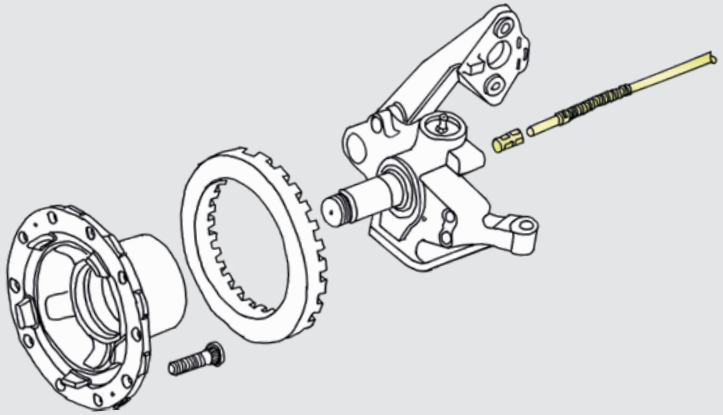

LPGRS	08/2016 →	T13, T28	EBS
GPR	04/2004 - 2018	T11, T12	EBS

94 - 164	06/1995 - 12/2004	T11, T12	ABS
94 - 164	06/1995 - 12/2004	T11, T12	EBS

8 x 2, 8 x 2*6, 8 x 2/4

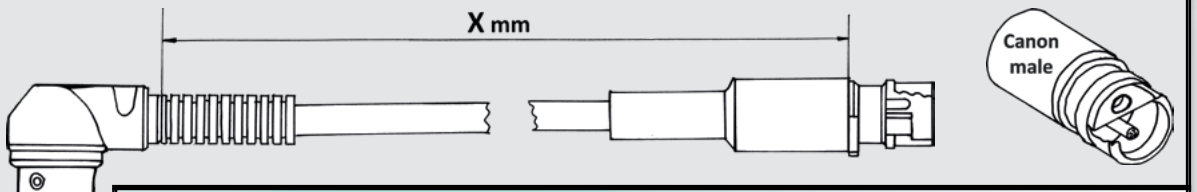

310433

ABS - sensor



ScR	Wabco R	
1892053	**-**	
1530699	**441 032 865 0**	2675 / 2450 mm
1530699	**441 032 885 0**	2690 / 500 mm
1428443	**441 032 865 0**	2675 / 2450 mm
1355747	**441 032 555 0**	2240 / - mm
1353493	**441 032 594 0**	2240 / - mm



kg 0,35





→ 310429



→ 310427



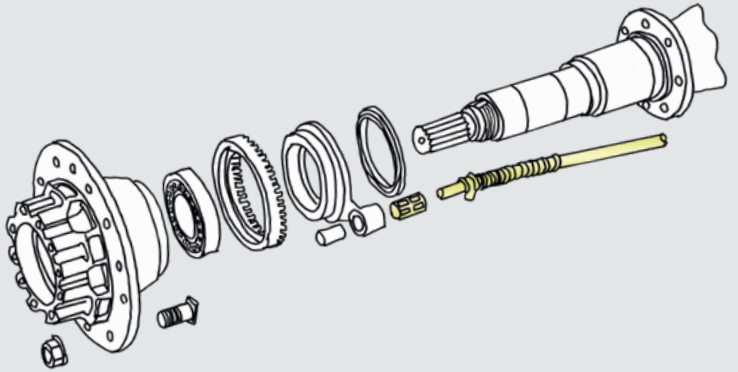

GPR	04/2004 - 2018	T14, T30	ABS
94 - 164	06/1995 - 12/2004	T14, T30	ABS
94, 114, 124	10/1997 - 11/2006	T12	ABS

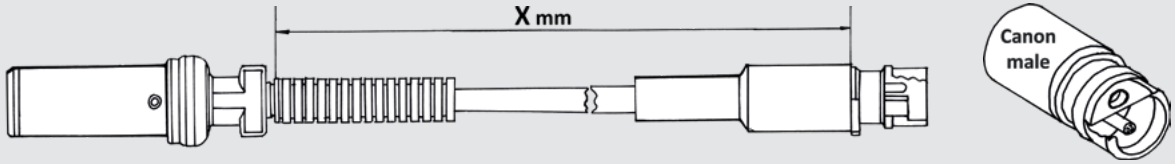

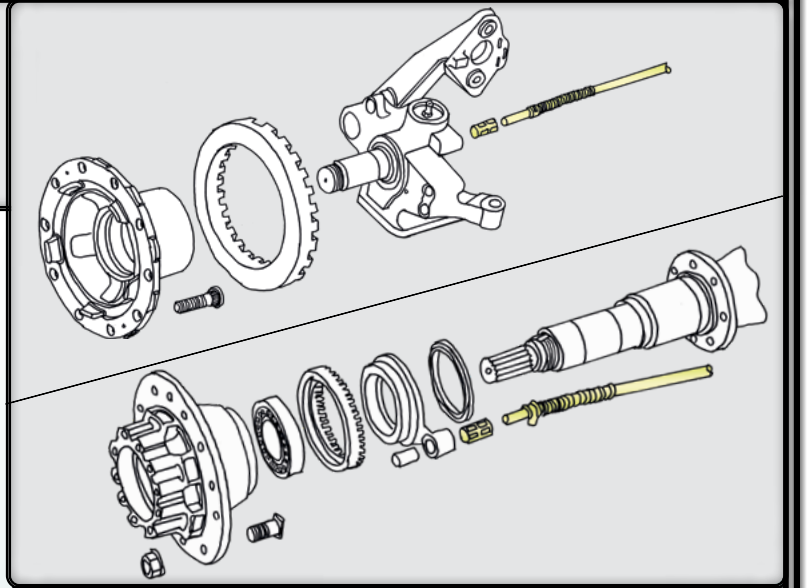

310434

EBS / ABS - sensor



ScR	Wabco R
1892054	-
1530700	441 032 908 0
1534519	441 032 910 0
1534518	441 032 908 0
1431120	441 032 910 0
1360615	441 032 729 0



kg 0,27





→ 310428



LPGRS	08/2016 →	T11, T12	ABS / EBS
GPR	04/2004 - 2018	T11, T12	ABS / EBS
GPR	04/2004 - 2018	T11, T12	EBS
GPR	04/2004 - 2018	T30	ABS
94 - 164	06/1995 - 12/2004	T11, T12	ABS
94 - 164	06/1995 - 12/2004	T14, T30	ABS

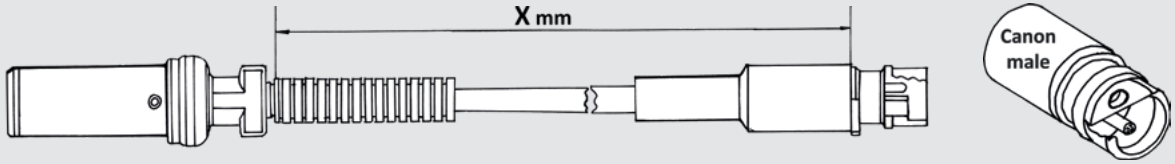

310435

ABS - sensor



ScR	Wabco R	
1892055	**-**	
1530701	**441 032 924 0**	2670 / 1250 mm
1453597	**441 032 924 0**	2670 / 1250 mm
1530701	**441 032 916 0**	2240 / 500 mm
1441276	**441 032 916 0**	2240 / 500 mm



kg 0,34





→ 310430



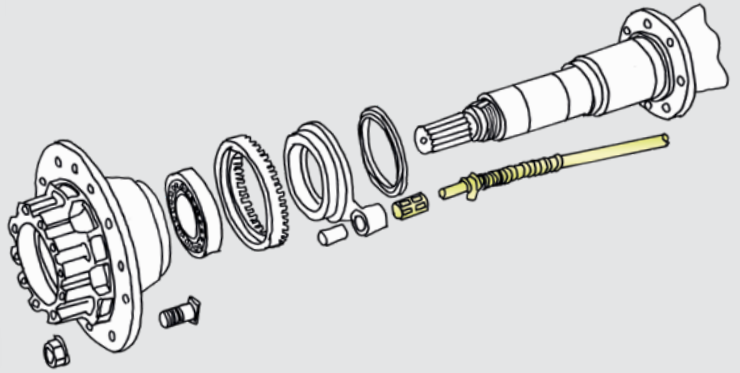

GPR	04/2004 - 2018	T30	ABS
94 - 164	06/1995 - 12/2004	T14, T30	ABS

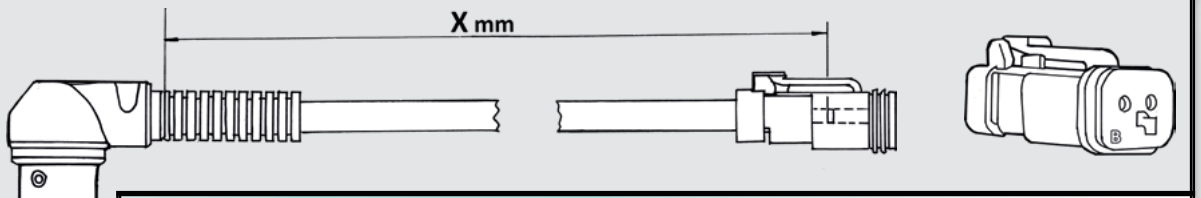

310436

EBS - sensor



ScR	Wabco R	
1892056	**-**	
1530702	**441 032 872 0**	2000 / 1250 mm
1545506	**441 032 872 0**	2000 / 1250 mm
1534528	**441 032 114 0**	1700 / 1250 mm
1439666	**441 032 889 0**	1600 / 530 mm
1428454	**441 032 872 0**	2000 / 1250 mm







kg 0,20

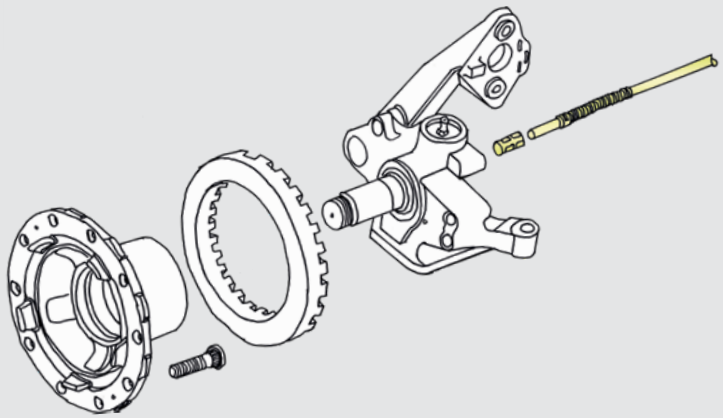

GPR	04/2004 - 2018	T87, T88	EBS
94 - 164	06/1995 - 12/2004	T87, T88	EBS
94 - 164	06/1995 - 12/2004	T12	EBS

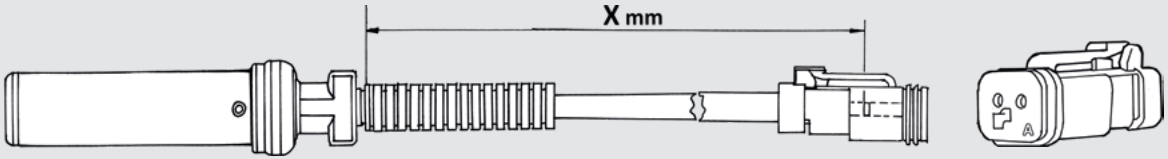

310437

EBS - sensor



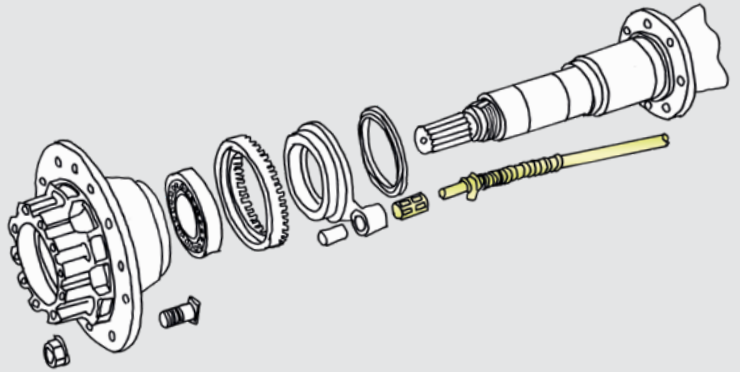

ScR	Wabco R		
1892057	**-**	1650 mm	A-plug
1530704	**441 032 993 2**	no more available	
1531360	**441 032 952 0**	1650 / 1250 mm	A-plug
1531361	**441 032 953 0**	1400 / 1250 mm	B-plug
1482007	**441 032 944 0**	1400 / 700 mm	B-plug
1482006	**441 032 943 0**	1800 / 700 mm	A-plug







kg 0,27

Drive axle			
GPR	04/2004 - 2018	T13, T14	EBS
ASA1000			
LPGRS	08/2016→	T28, T30	EBS
GPR	04/2004 - 2018	T28, T30	EBS
Drive axle			
94 - 164	06/1995 - 12/2004	T13, T14	EBS
ARA 760/820			
94 - 164	06/1995 - 12/2004	T28, T30	EBS

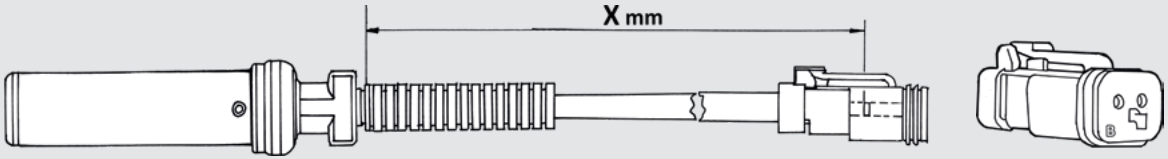

310438

EBS - sensor

ScR	Wabco R
1892058	**-**
1530705	**441 032 902 0**
1530705	**441 032 906 0**
1530705	**441 032 907 0**
1534525	**441 032 950 0**
1534522	**441 032 951 0**
1428451	**441 032 901 0**









kg 0,23

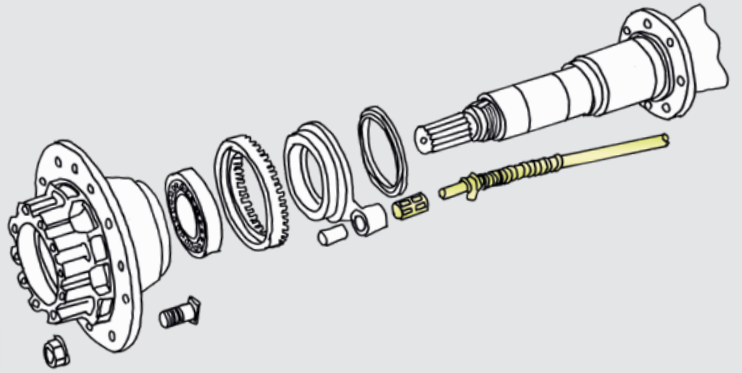

LPGRS	08/2016 →	T87, T88	EBS
LPGRS	08/2016 →	T28, T30	EBS
GPR	04/2004 - 2018	T28, T30	EBS

94 - 164	06/1995 - 12/2004	T13, T14, T28, T30 EBS

94 - 164	11/2005→	T13, T14	EBS

ASA 701

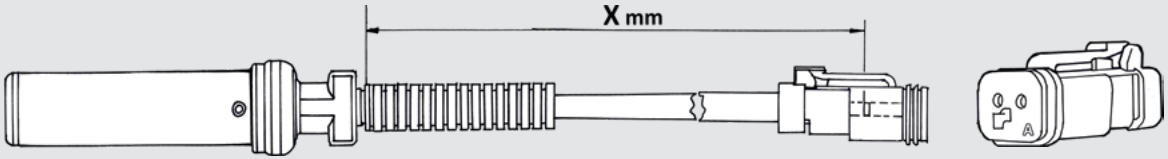

310439

EBS - sensor

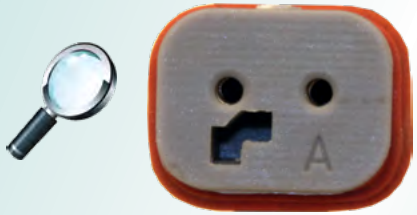

ScR	Wabco R		
1892059	**-**		
1530706	**441 032 903 0**	3400 / 1000 mm	A-plug
1437931	**441 032 903 0**	3400 / 1000 mm	A-plug
1530706	**441 032 904 0**	3050 / 1250 mm	B-plug
1437932	**441 032 904 0**	3050 / 1250 mm	B-plug



kg 0,34





Alternative:

→ 310442



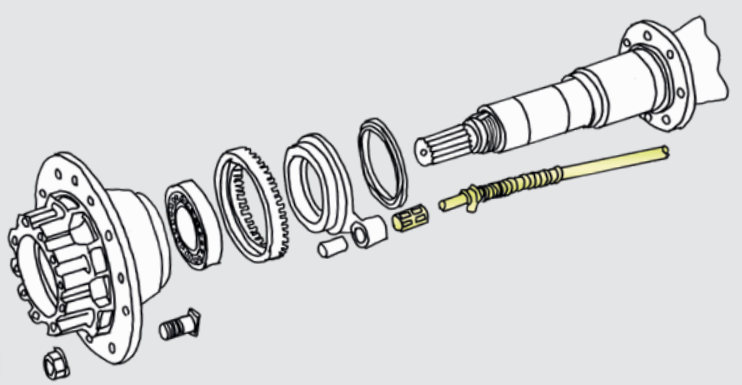

GPR	04/2004 - 2018	T13, T14	EBS	
94 - 164	06/1995 - 12/2004	T13, T14	EBS	
6x4	8x4			

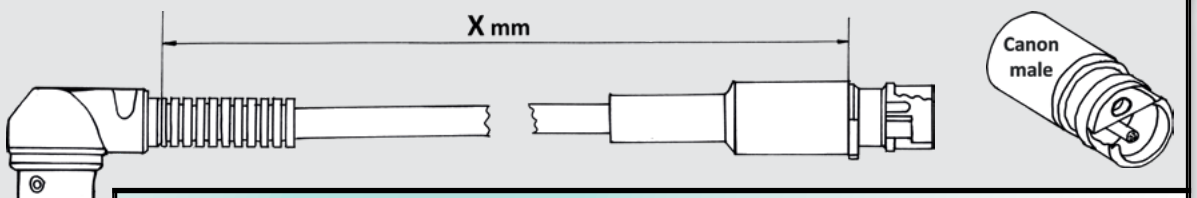

310442

EBS - sensor



ScR	Wabco R	
1892062	**-**	
1865526	**441 032 917 2**	no more available
1546365	**441 032 118 0**	1150 / 1000 mm

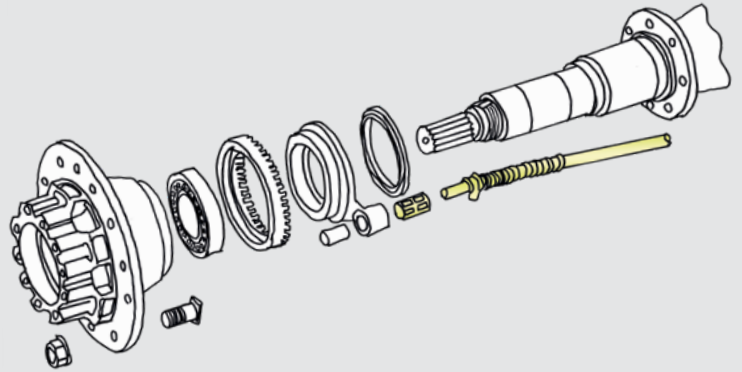







→ 310439



kg 0,24

GPR	04/2004 - 2018	T14	EBS

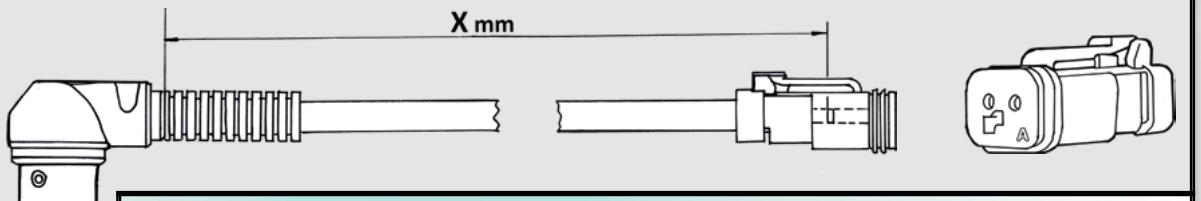

310448

EBS - sensor



ScR	Wabco R
1892068	**-**
1547687	**441 032 117 0**
1530703	**441 032 115 0**
1530703	**441 032 116 0**







kg 0,32

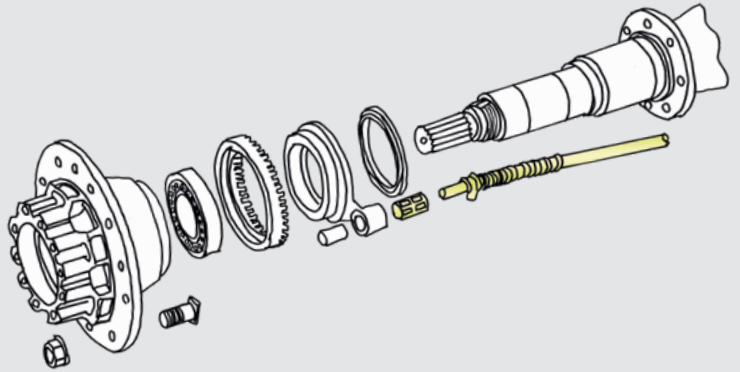

LPGRS	08/2016 →	T28, T30, T87, T88	EBS
GPR	04/2004 - 2018	T28, T30, T87, T88	EBS
94 - 164	06/1995 - 12/2004		EBS

Rear double drive
Tag axle

KN	11/2005→	

310474

Sensor wheel

ScR **1790708**

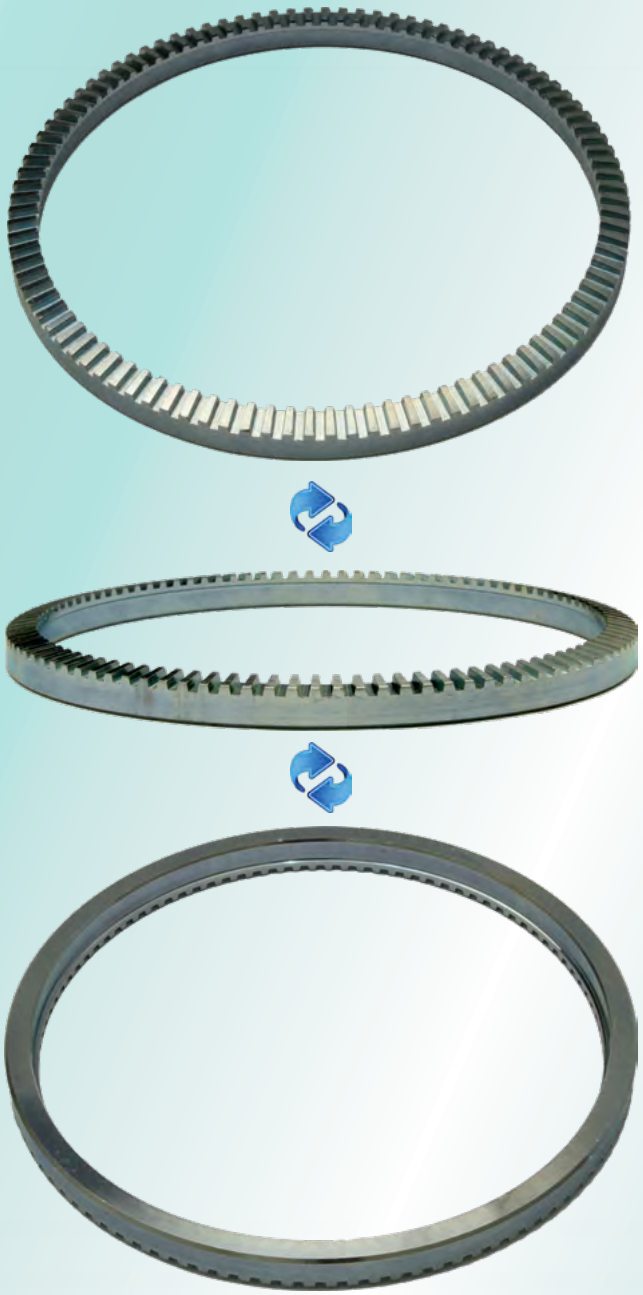

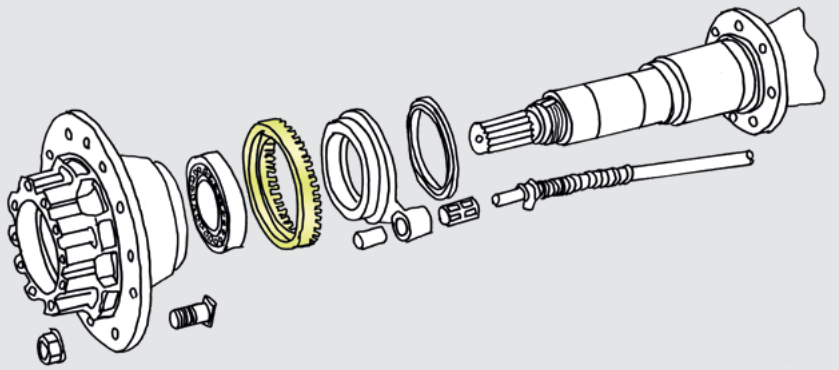

Inner Ø 174,2 mm
Outer Ø 192,2 mm
Width: 13 mm

Material: Steel

kg 0,43

LPGRS	08/2016→		
AD 500/501 TZP	RP/RBP 835	RH 835I	
GPR	01/2016 - 2018		
AD 1100 ADA 1300	AD 1300 ADA 1302	ASA 1000 / -D	
GPR	04/2004 - 2018		
AD 1503P / 1603P AD 800TZP / H9SR	RP/RBP 835	RH 835I	
KN	11/2005→		
ADA 1300	ASA 1300		

310990

Protect bracket → ABS brake valve

ScR **1544078**

Material: Steel



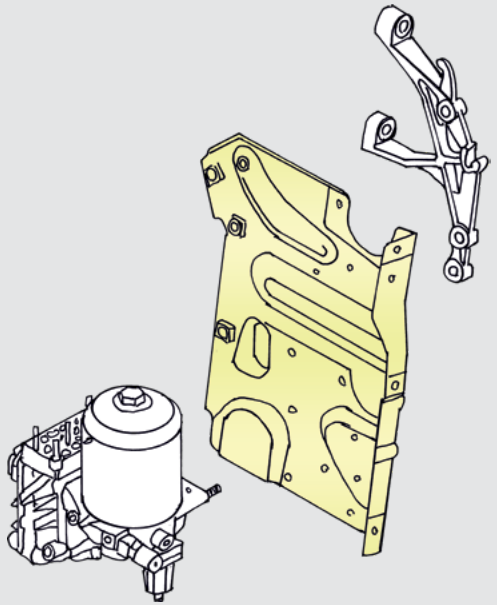



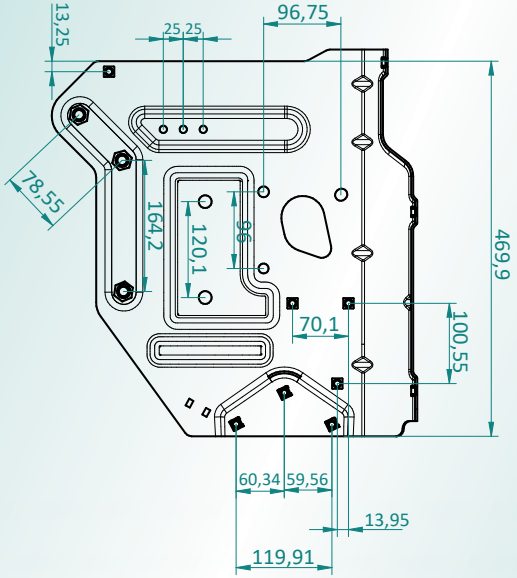

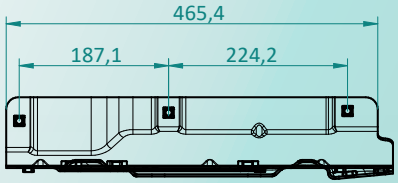

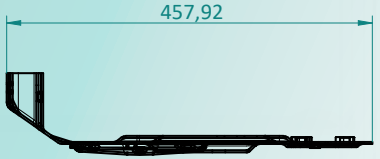

GPR	2004 - 10/2011	→ 2071414 → 5280830 → 9164576 → 3698509

kg 4,38

310991

Protect bracket → ABS brake valve

ScR

2105660
1793016

Material: Steel



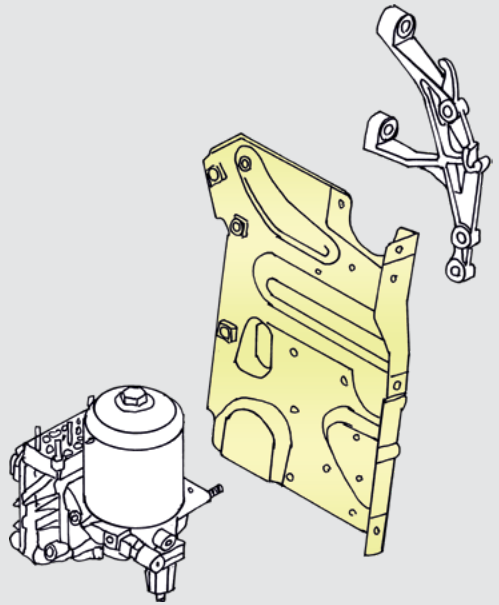



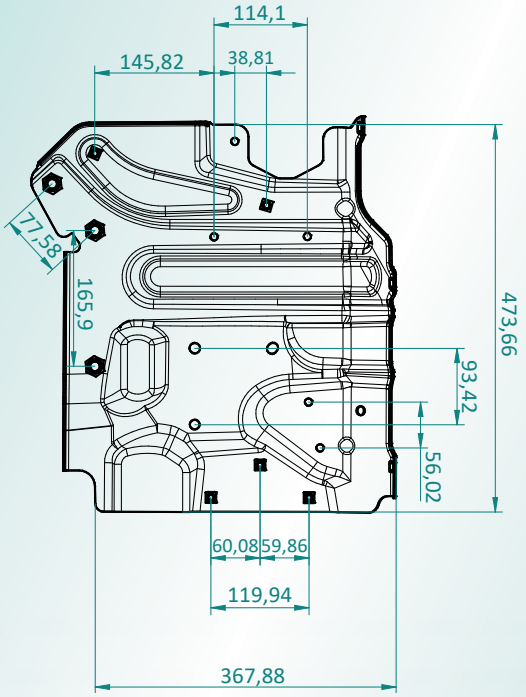

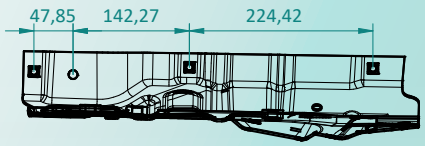

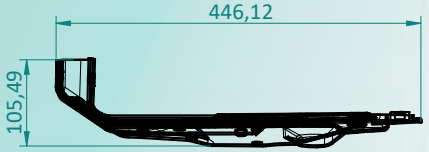

GPR	10/2011 - 2018	2071415→ 5280831→ 9164577→ 3698510→

kg 4,58

310980

Bracket → Exhaust brake cylinder

ScR

1800829
1721228

Material: Steel

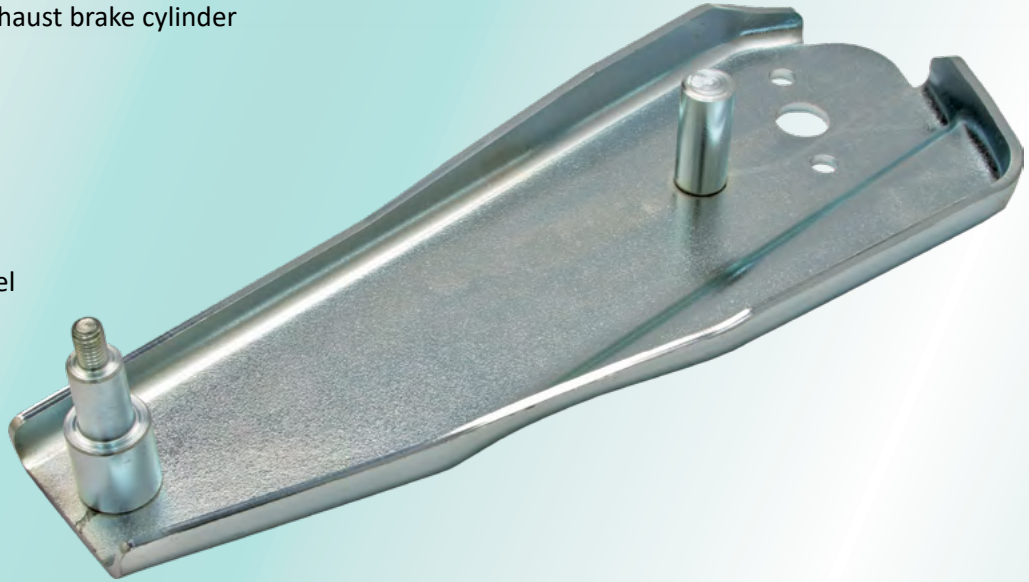

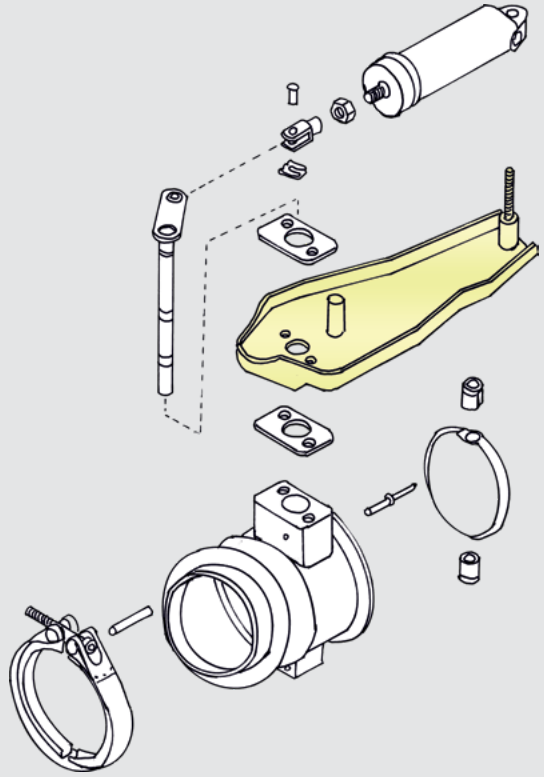

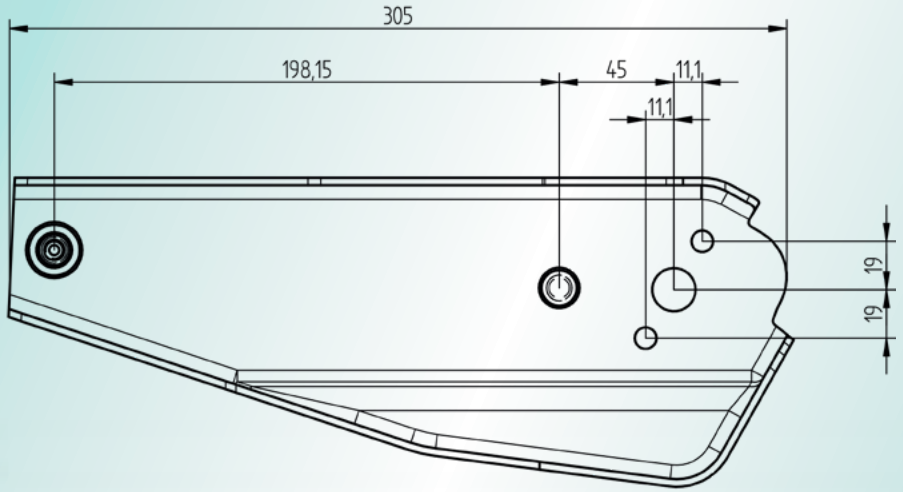

kg 1,21

HPI = High pressure injection
PDE = Pump nozzle unit

GPR	2004 - 2018
94 - 164	1994 - 2008

HPI = High pressure injection
PDE = Pump nozzle unit

KN	2004 →
94, 114, 124	1997 - 2010

311000

Crossmember, 1st, single & double beam



ScR

1728527
1525972
1491973
1430736

Material:
Painted steel

Length: XXX mm

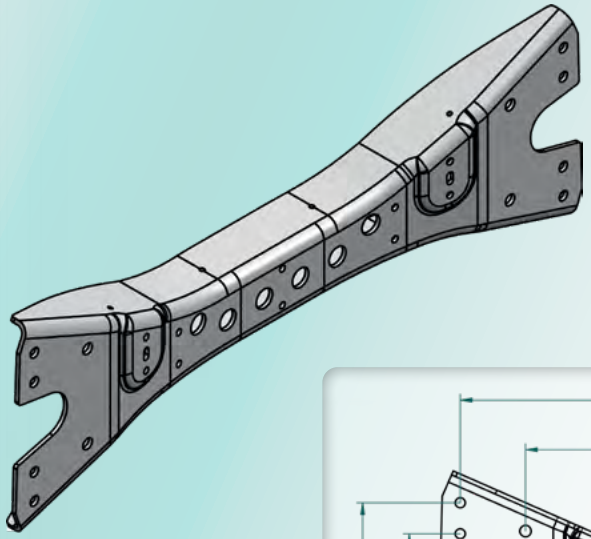

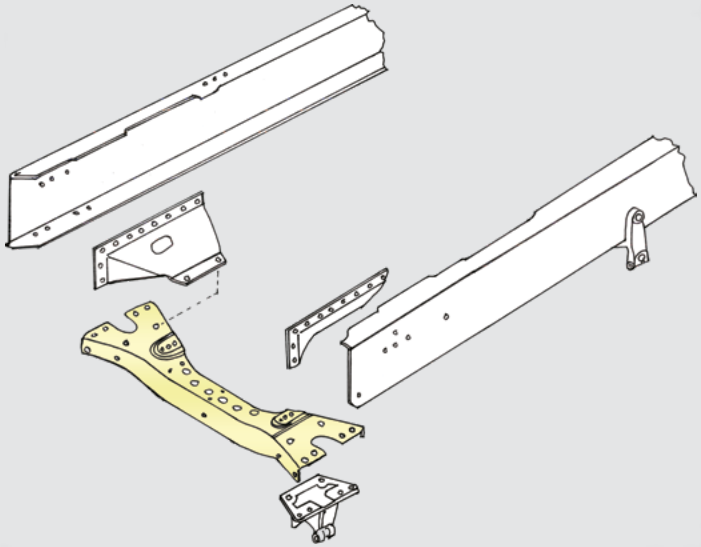

GPR 04/2004 - 2018
94 - 164 06/1995 - 12/2004

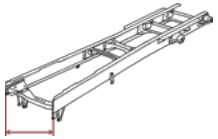

1020 mm

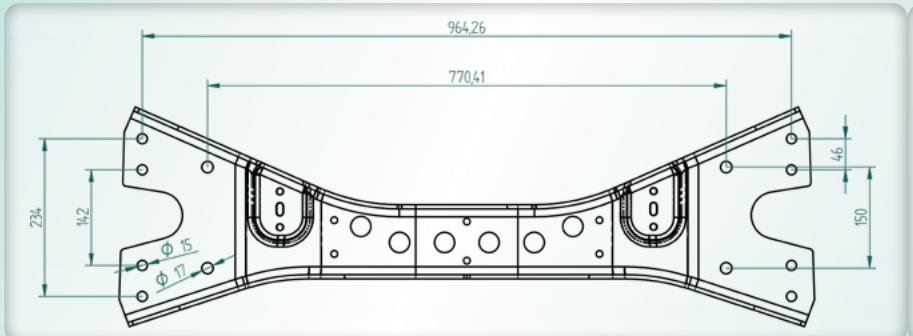

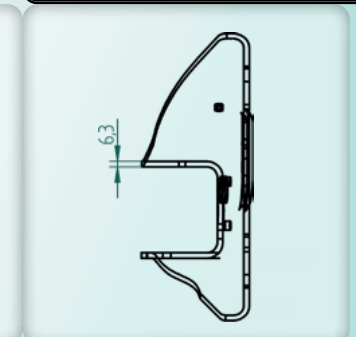

kg 14,7

ScR
1525973, 1430737
Not available

311010

Crossmember, 1st,
single & double beam

ScR 1847940

Material:
Painted steel

Length: XXX mm

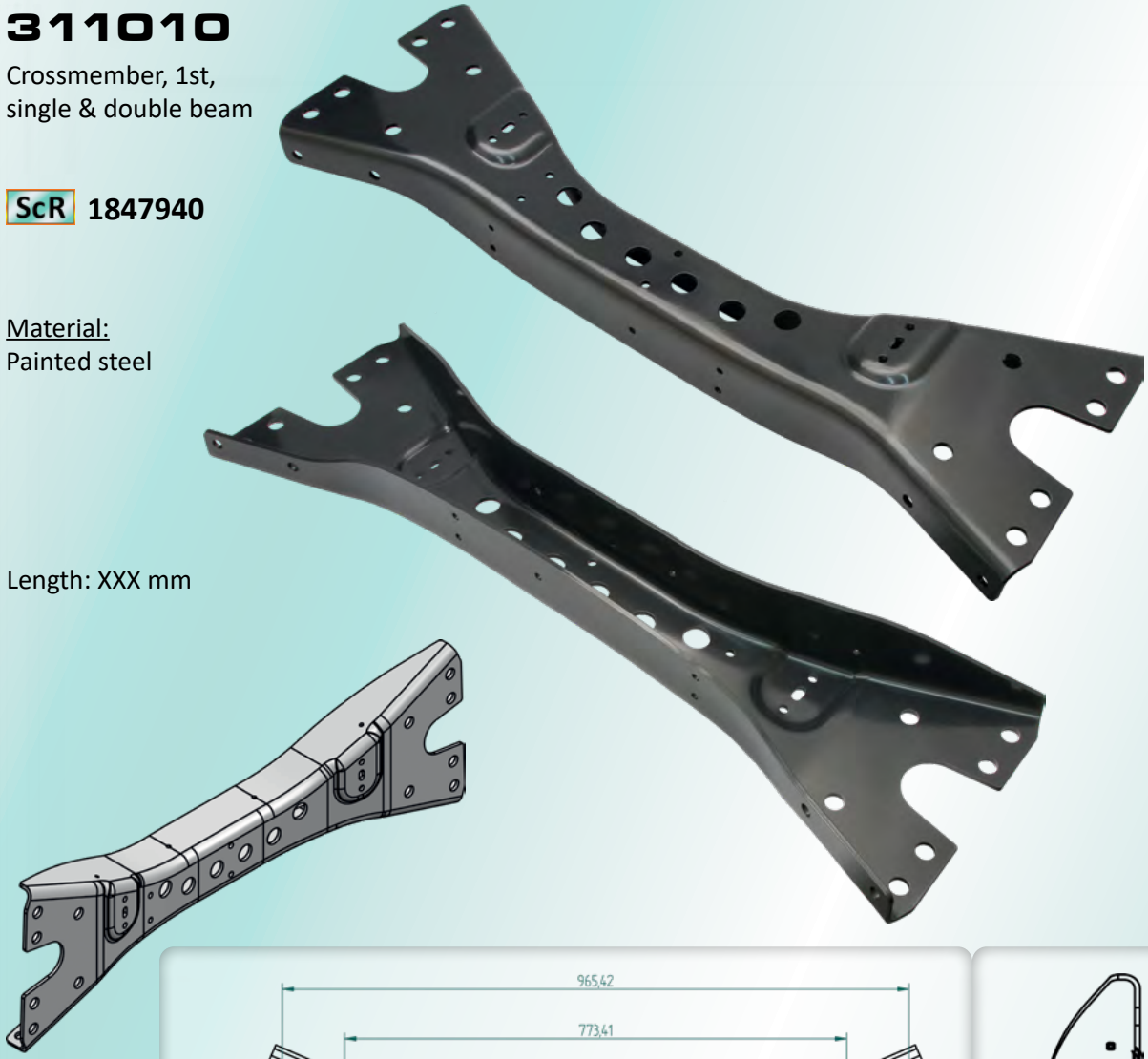

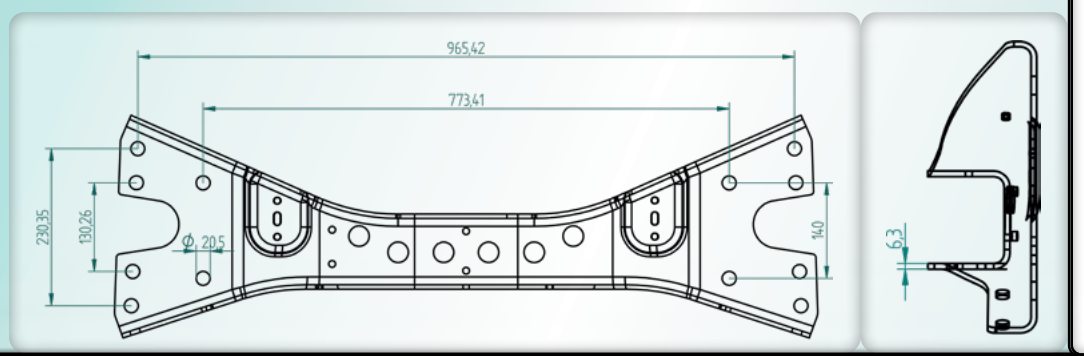

kg 14,7

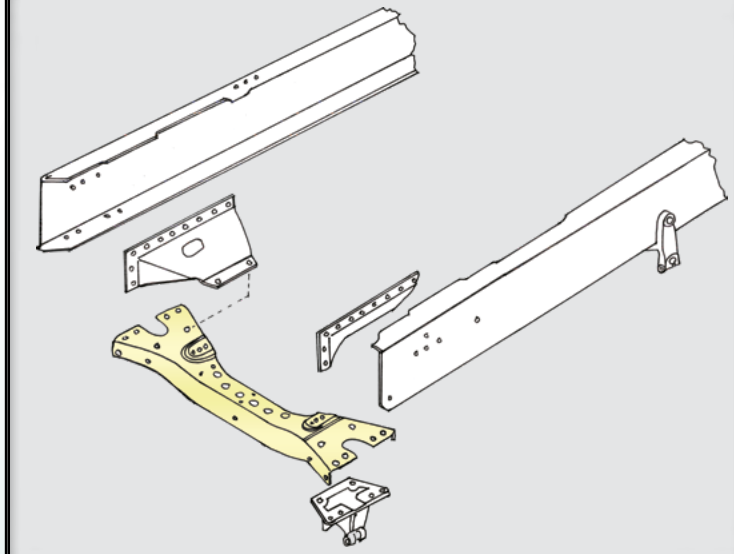

GPR 94 - 164 | 04/2004 - 2018 | 06/1995 - 12/2004

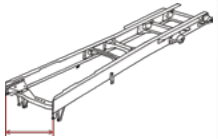

1140 mm

GPR 94 - 164 | 04/2004 - 2018 | 06/1995 - 12/2004

6 x 4, 8 x 4, 6 x 6, 10x4*6

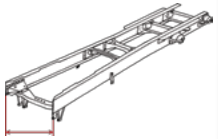

1020 mm



3 x 29 mm, 4 x 28 mm

311040

Crossmember, 2nd, single beam

ScR

1833809
1916040
1498511
1323095

Material:
Painted steel

Length: 835,36 mm

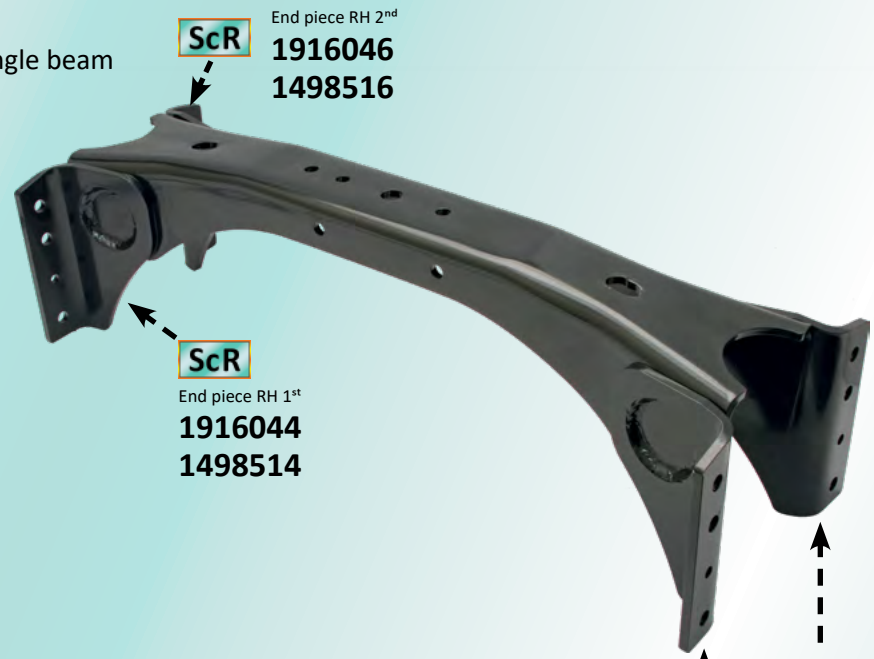

ScR End piece RH 2nd
1916046
1498516

ScR End piece RH 1st
1916044
1498514

ScR End piece LH 2nd
1916045
1498515

ScR End piece LH 1st
1916043
1498513

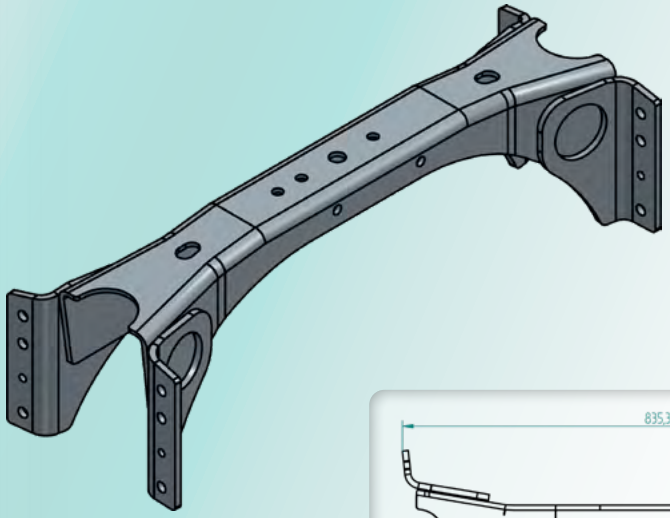

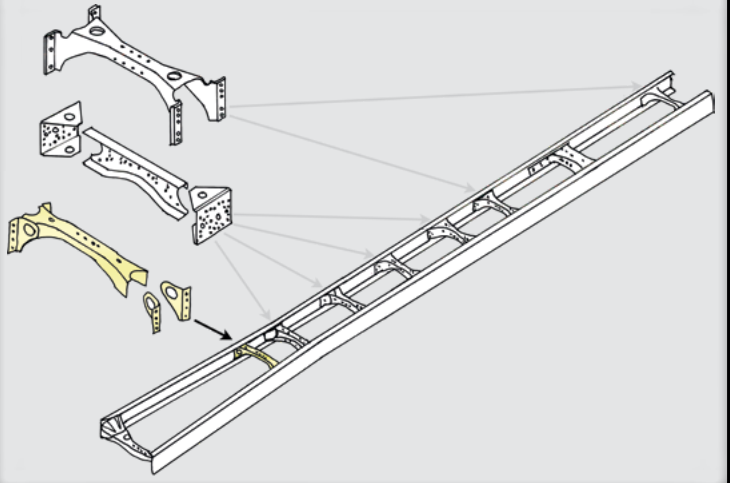

GPR	04/2004 - 2018
94 - 164	06/1995 - 12/2004

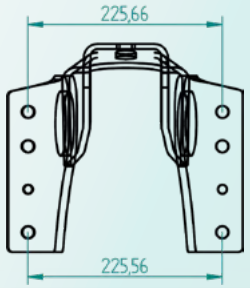

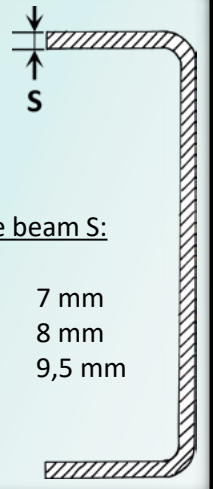

Single beam S:

F 700	7 mm
F 800	8 mm
F 950	9,5 mm

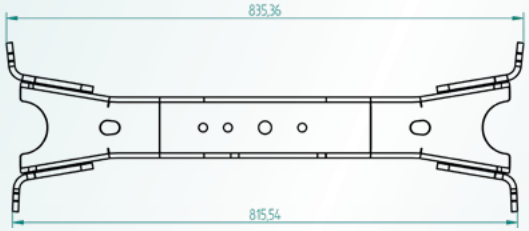

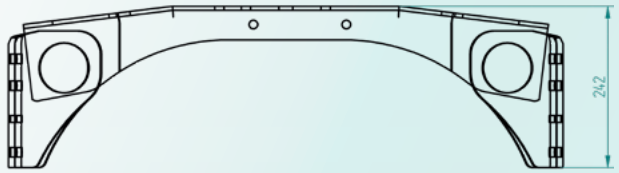

Double beam crossmember:
HD 311041

kg 18,11

311041

Crossmember, 2nd, **double** beam

ScR
1833923
1916041
1498512



ScR End piece RH 2nd
1916046
1498516

ScR End piece RH 1st
1916044
1498514

ScR End piece LH 2nd
1916045
1498515

ScR End piece LH 1st
1916043
1498513

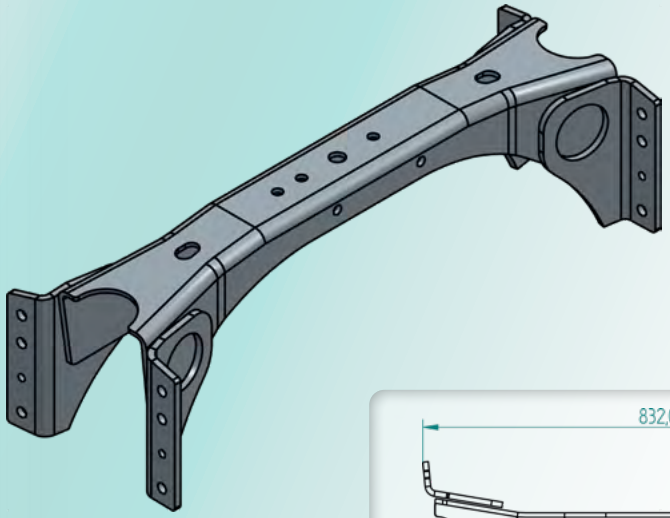

Material:
Painted steel

Length: 832,08 mm

kg 18,6

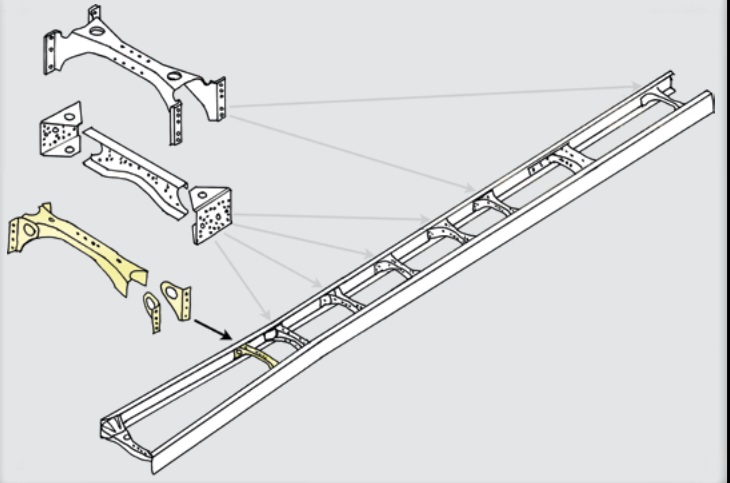

GPR 04/2004 - 2018
94 - 164 06/1995 - 12/2004

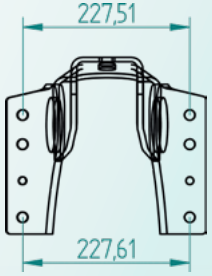

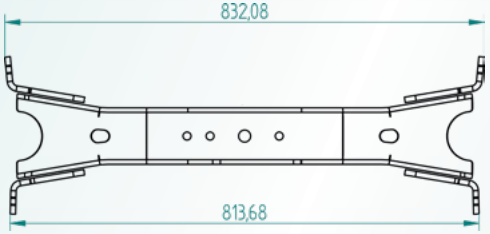

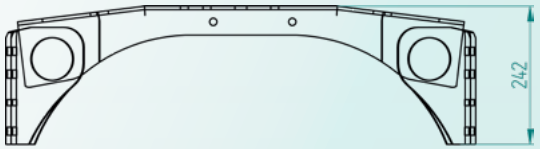

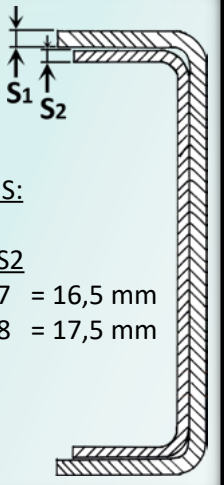

Double beam S:

	S1	S2	
F957	9,5	7	= 16,5 mm
F958	9,5	8	= 17,5 mm

Single beam crossmember:
HD 311040

311056

Crossmember, 3rd, single beam

ScR **1323082**

Material:
Painted steel

Length: 782,39 mm

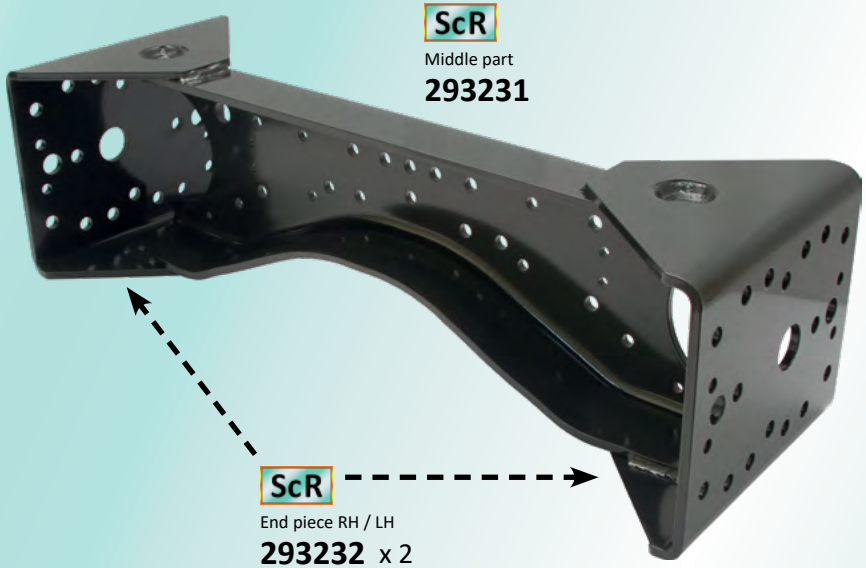

ScR
Middle part
293231

ScR
End piece RH / LH
293232 x 2

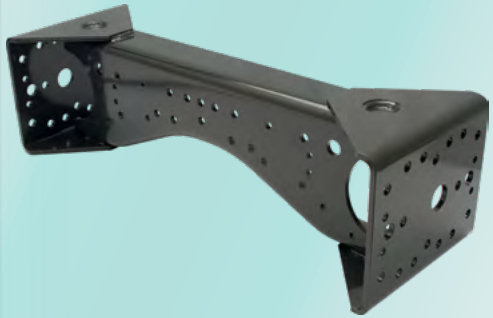

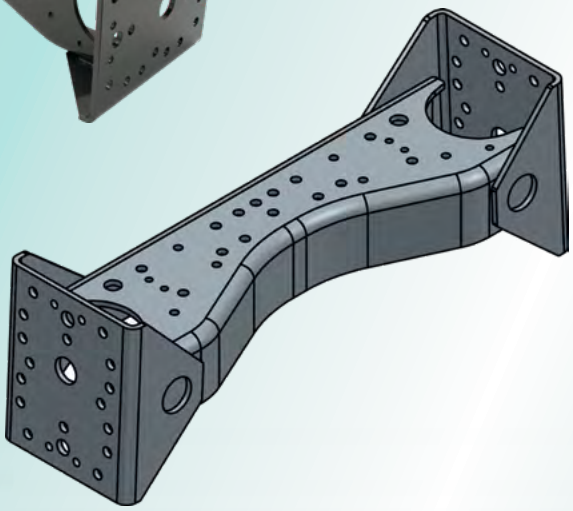

kg 24

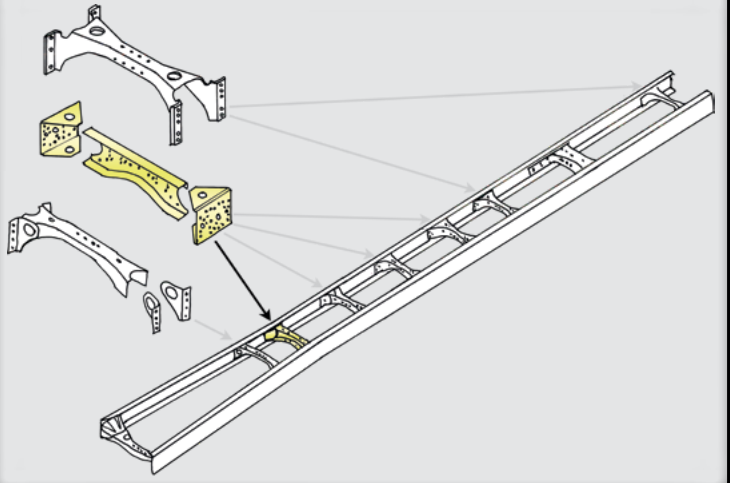

GPR	04/2004 - 2018
94 - 164	06/1995 - 12/2004

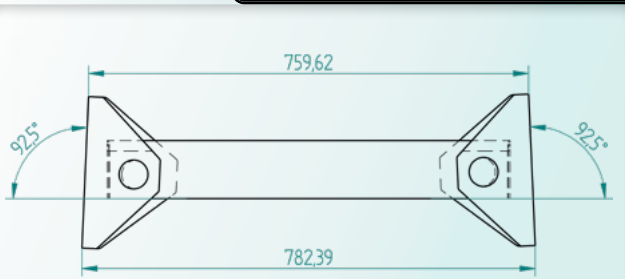

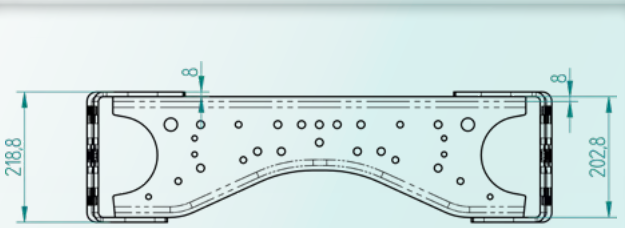

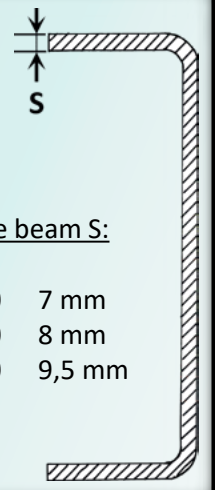

Single beam S:

F 700	7 mm
F 800	8 mm
F 950	9,5 mm

Double beam crossmember:
HD 311057

311057

Crossmember, 3rd, **double** beam

ScR **1335744**

Material:
Painted steel

Length: 762,77 mm



ScR
Middle part
293236

ScR
End piece RH / LH
293237 x 2

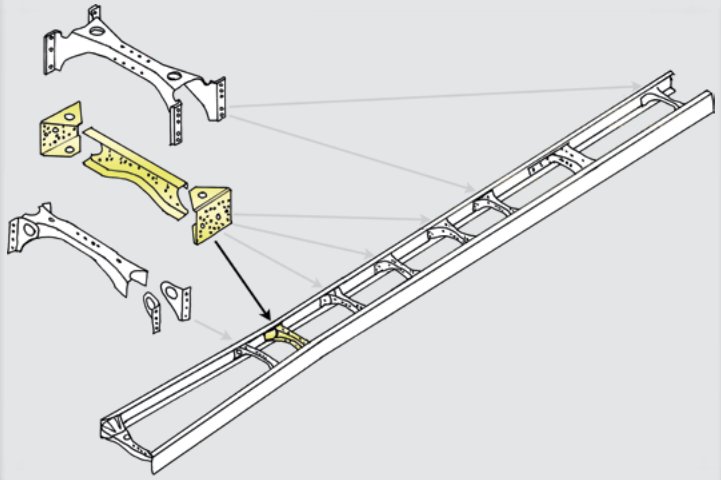

GPR	04/2004 - 2018
94 - 164	06/1995 - 12/2004

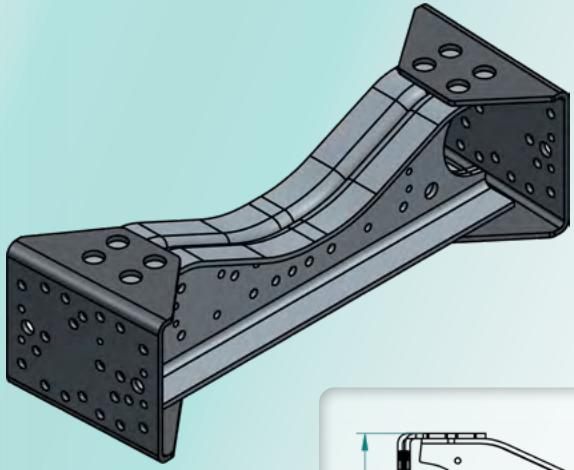

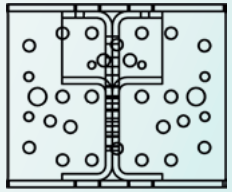

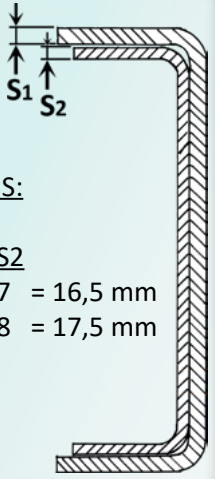

Double beam S:

	S1	S2	
F957	9,5	7	= 16,5 mm
F958	9,5	8	= 17,5 mm

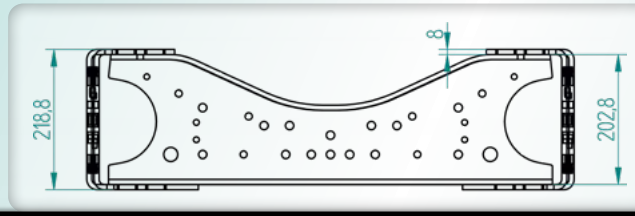

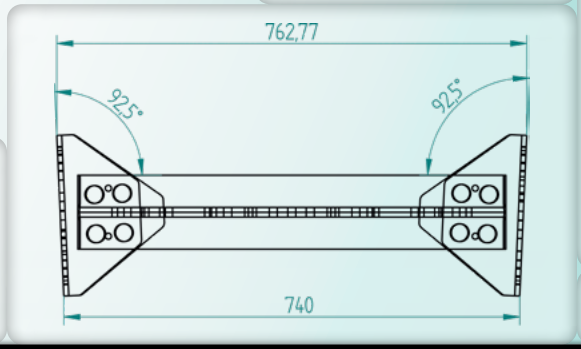

kg 32

Single beam crossmember:
HD 311056

311060

Crossmember, 4th/5th/6th example, single beam

ScR **293224**

Material:
Painted steel

Length: 752 mm

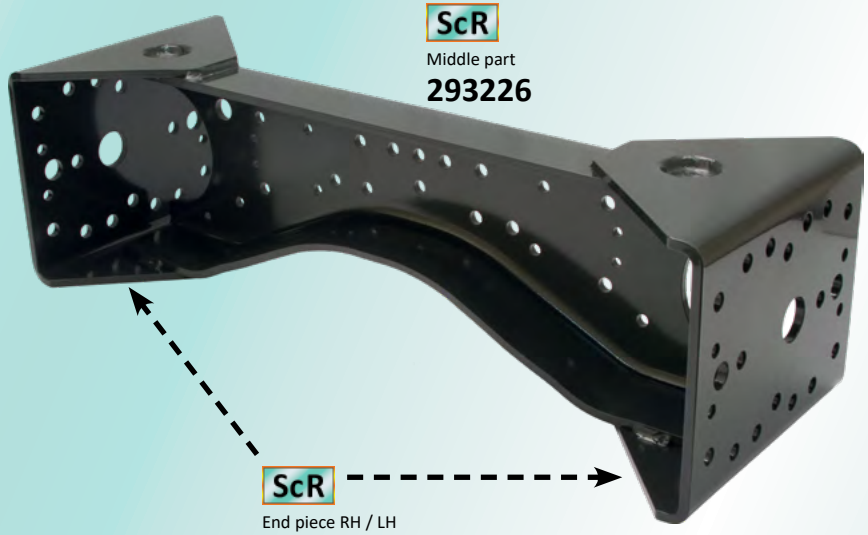

ScR
Middle part
293226

ScR
End piece RH / LH
293227 x 2

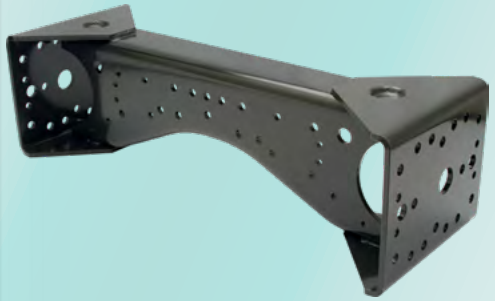

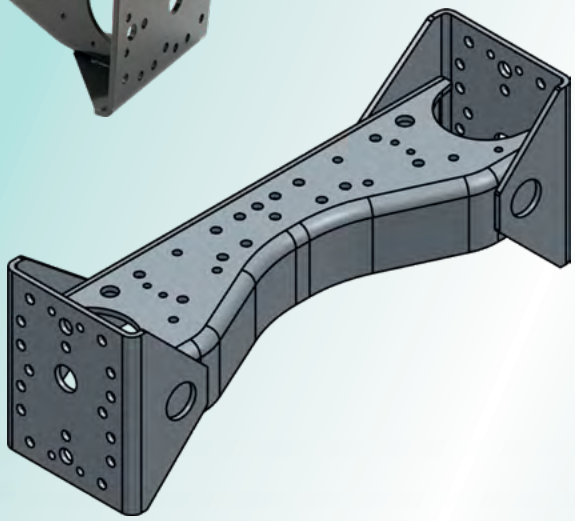

kg 23,76

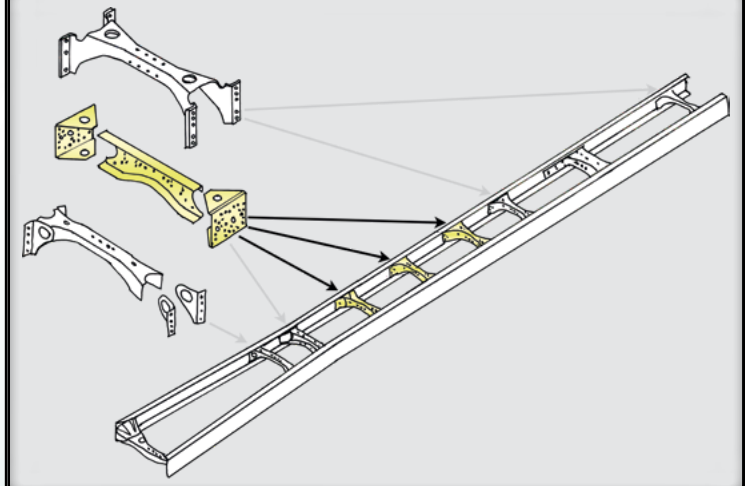

GPR	04/2004 - 2018
94 - 164	06/1995 - 12/2004
93 - 143	1987 - 1996

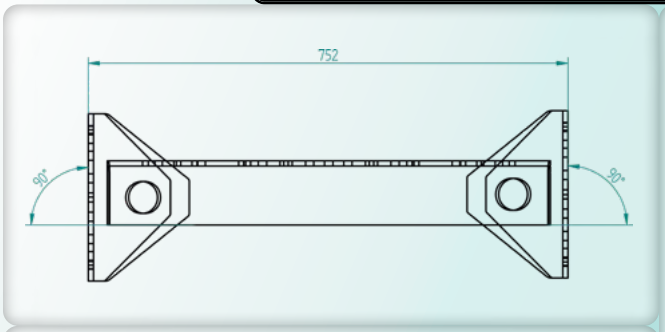

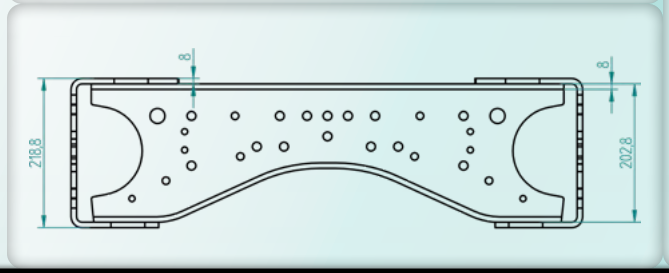



Single beam S:

F 700	7 mm
F 800	8 mm
F 950	9,5 mm

311073

Crossmember, **double** beam



ScR

1401562
293253

Material:
Painted steel

Length: 735 mm

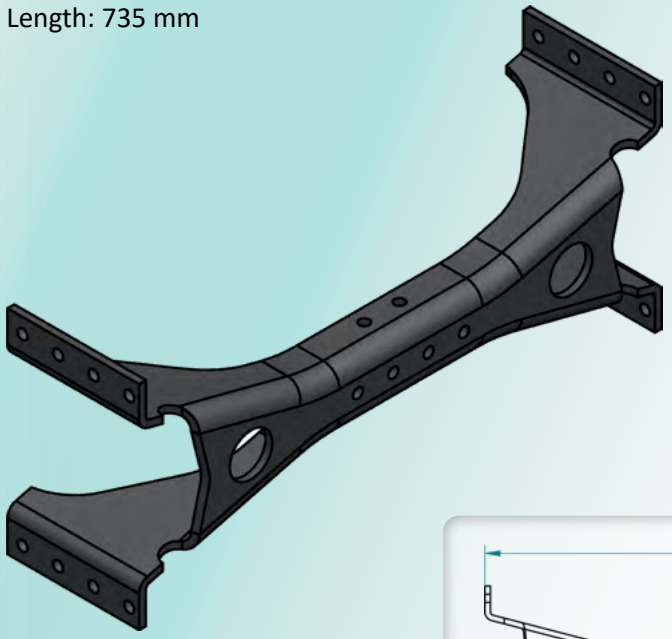

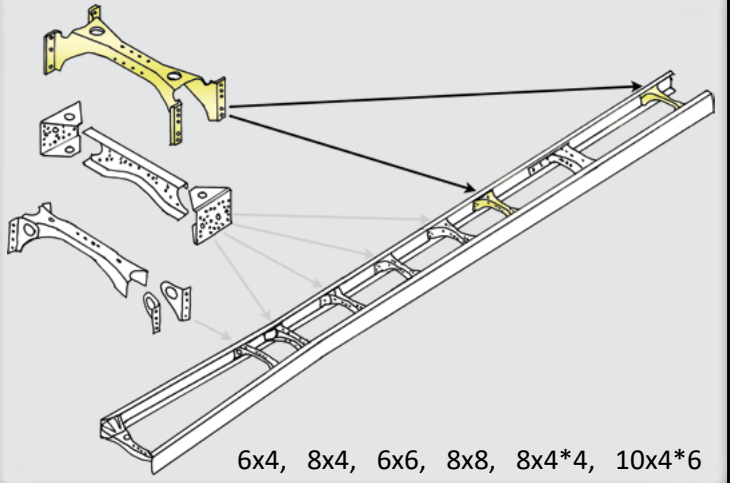

6x4, 8x4, 6x6, 8x8, 8x4*4, 10x4*6

GPR	04/2004 - 2018
94 - 164	06/1995 - 12/2004
93 - 143	1987 - 1996

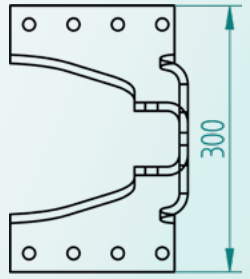

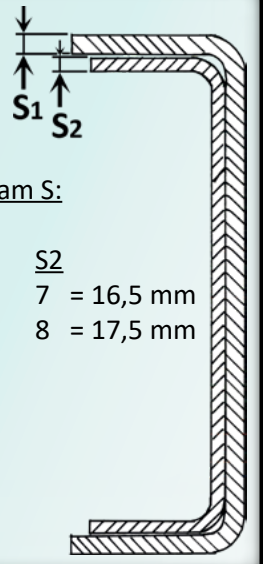

Double beam S:

	S1	S2	
F957	9,5	7	= 16,5 mm
F958	9,5	8	= 17,5 mm

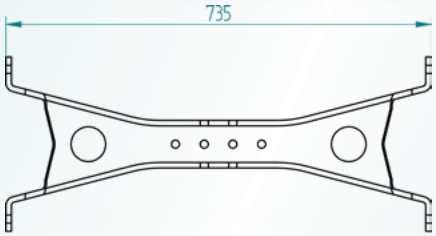



kg 14,8

311074

Crossmember, single beam



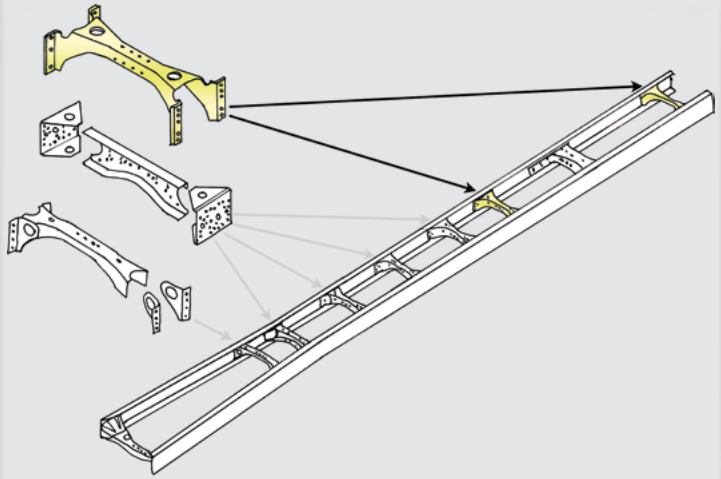

ScR

2648923
2548014
1487754

Material:
Painted steel

Length: 752 mm

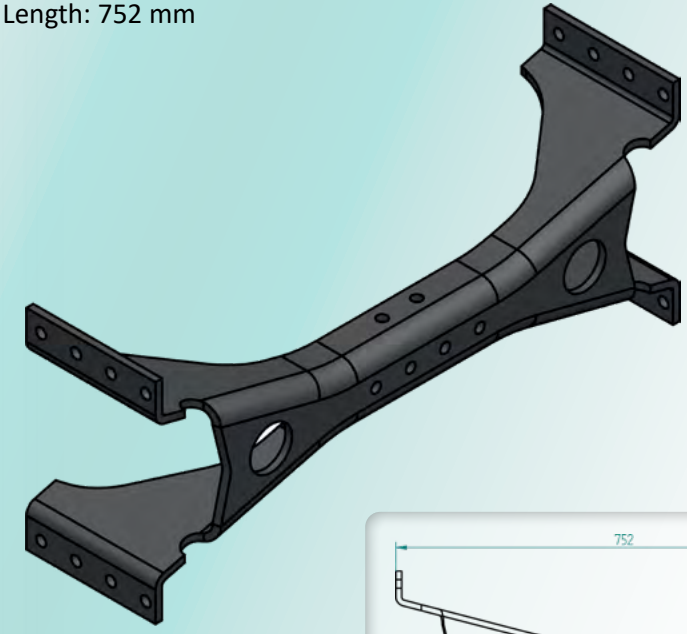

GPR	04/2004 - 2018
94 - 164	06/1995 - 12/2004
93 - 143	1987 - 1996

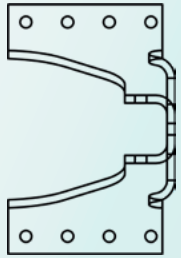

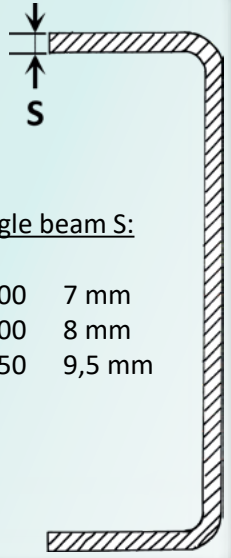

Single beam S:

F 700	7 mm
F 800	8 mm
F 950	9,5 mm

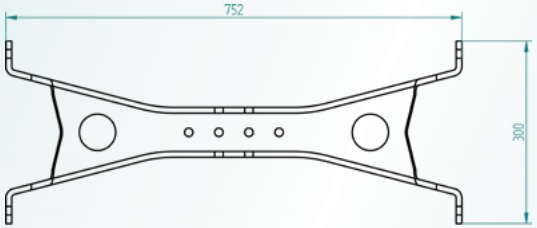

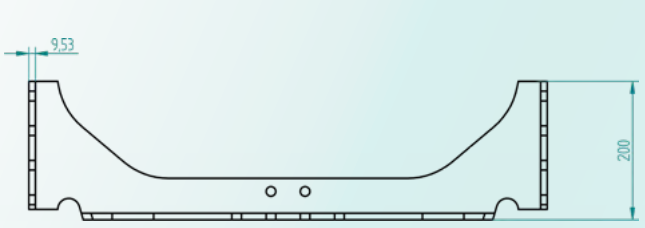

kg 15,5

311004

Old number: **312920**

Spring bracket, front

Material: Cast iron

ScR

1725915
1493210
1325808

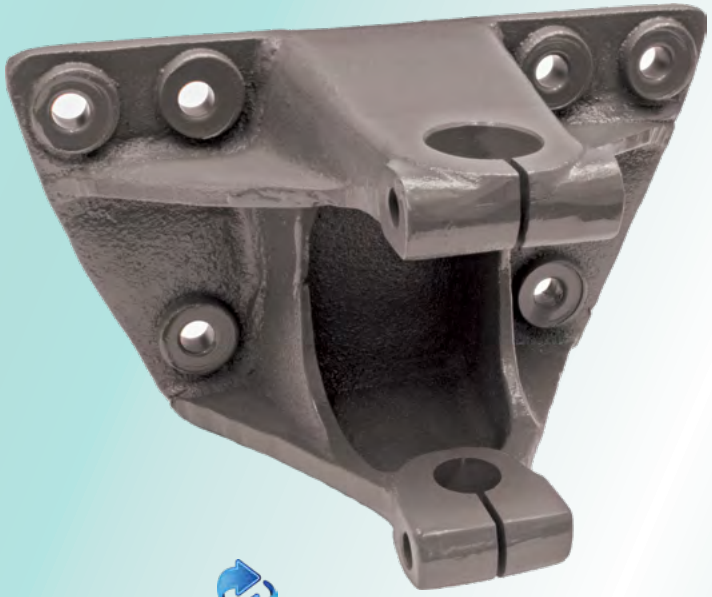



kg 6,4

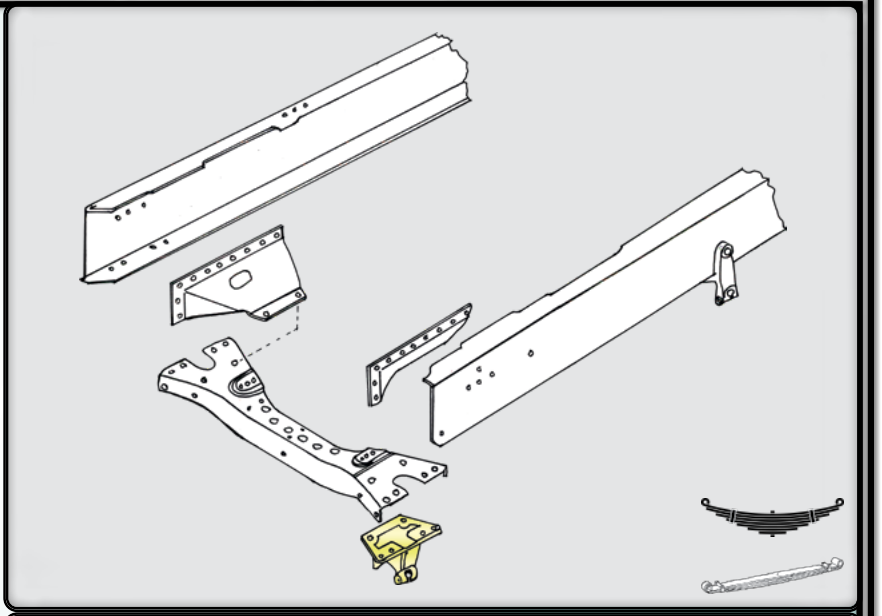

GPR	04/2004 - 2018	1020 mm
6x4, 8x4, 6x6	3x29mm, 4x28mm	

94 - 164	06/1995 - 12/2004

Suitable spring shaft kit:

HD **312946**



311006

Spring bracket, front, LEFT side

ScR 1785814

Material: Cast iron





kg 7,05

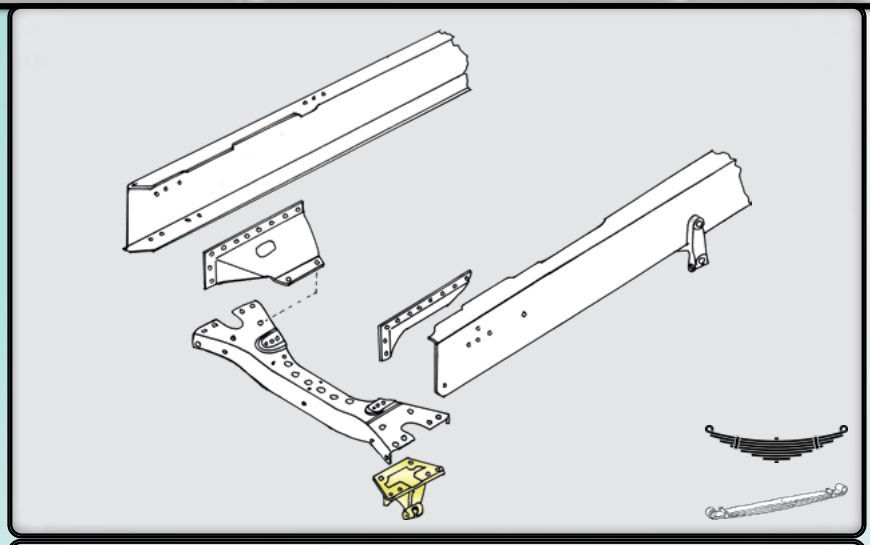

GPR	09/2012 - 2018	1020 mm	
2081160→	5304372→	9171791→	3815479→
3x29 mm,	4x28 mm	6 x 4,	8 x 4, 6 x 6

GPR	04/2004 - 2017	1140 mm

Suitable spring shaft kit:

HD 312946



311007

Spring bracket, front, RIGHT side

ScR 1785815

Material: Cast iron





kg 7,13

311005

Old number: **312922 + 312923**

Spring bracket, rear

Material: Cast iron





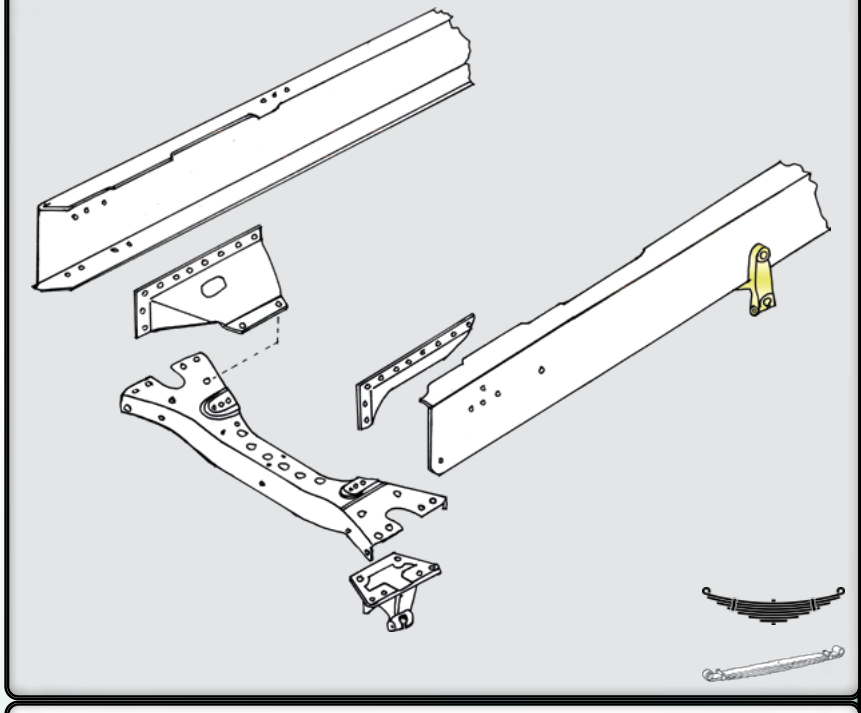

ScR	ScR
1326547	1326548
1739454	1739455
1528323	1528324

Reference numbers:

DT	125756	ScR	1739454
DT	125757	ScR	1739455
DT	125632	ScR	1326547
DT	125633	ScR	1326548

Sampa	042227	ScR	1739454	ScR 1739455
Sampa	043262	ScR	1326547	ScR 1326548
Auger	75126	ScR	1739454	ScR 1739455
Auger	81214	ScR	1326547	ScR 1326548

kg 3,85

GPR — 04/2004 - 2018

94 - 164 — 06/1995 - 12/2004

Suitable spring shaft kit:

HD **312946**



311192

Nut plate

ScR

2143399
2421915
1525791

Threads: 2 x M20 x 2,5 mm

Length: 84 mm

Material: Forged steel

kg 0,17



Suits example:

- Chassis
- Suspension
- Steering
- Fifth wheel

LPGRS	08/2016→
GPR	04/2004 - 2018

311193

Nut plate

ScR **1525792**

Threads: 3 x M20 x 2,5 mm

Length: 142 mm

Material: Forged steel

kg 0,45



Suits example:

- Chassis
- Suspension
- Fifth wheel

311200

Bracket, left → Headlamp

ScR

1727991
1438557

Material:
Painted steel

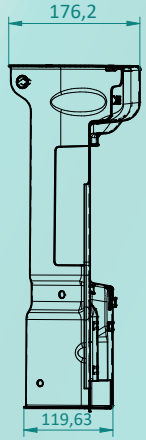

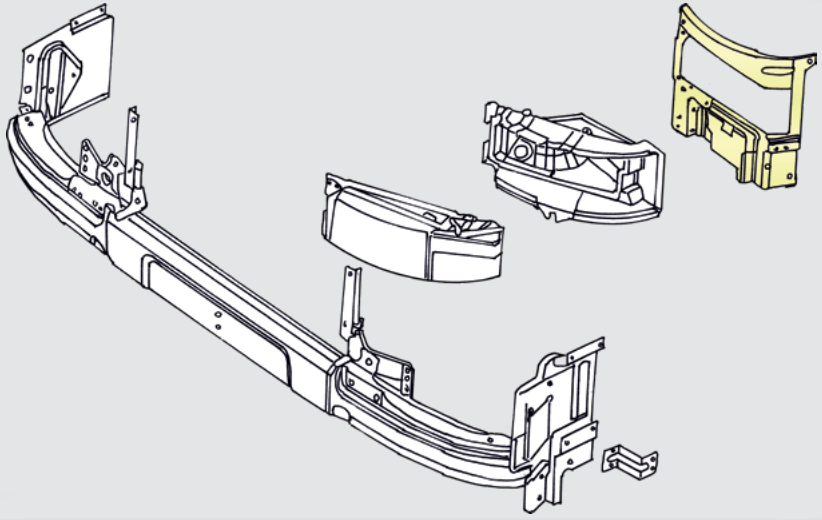

GPR | 2004 - 03/2009 | →2047053 →5226378 →9142033 →3646437

311201

Bracket, right → Headlamp

ScR

1727992
1438558

Material:
Painted steel

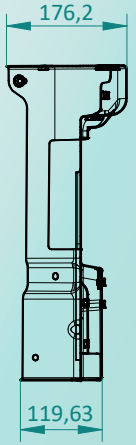

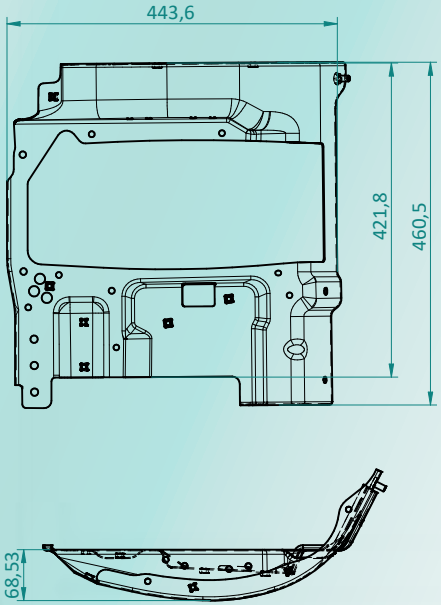



kg 2,22



kg 2,27

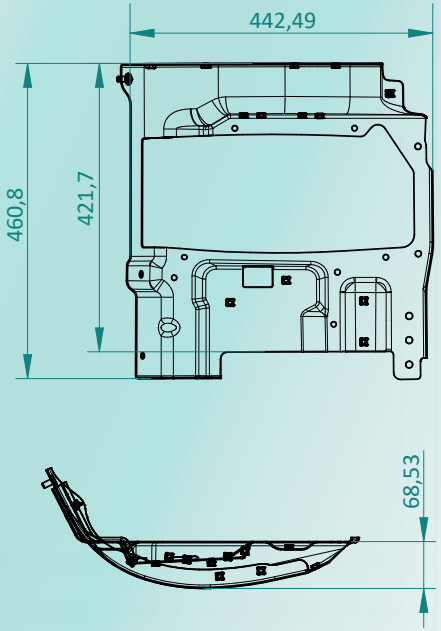

311202

Bracket, left → Headlamp

ScR

2227578
2124019
1932223
1853354

Material:
Painted steel

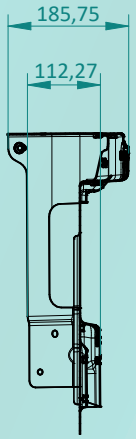

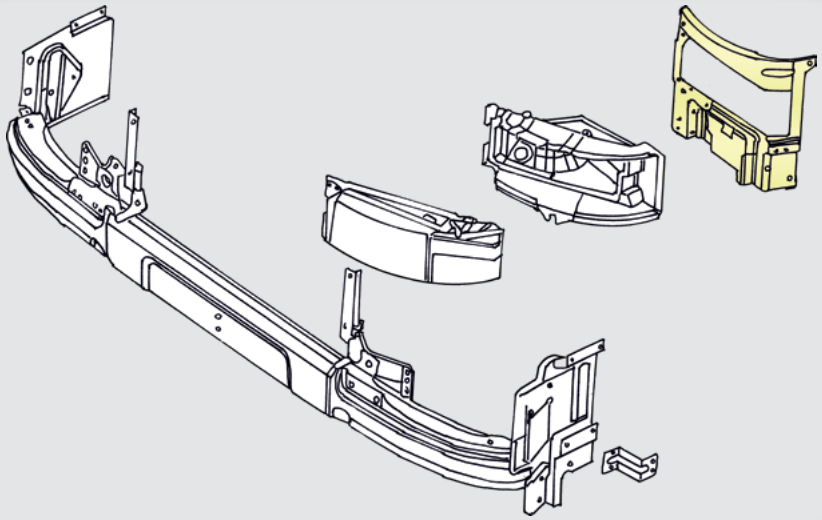

GPR | 03/2009 - 2018 | 2047054→ 5226379→ 9142034→ 3647798→

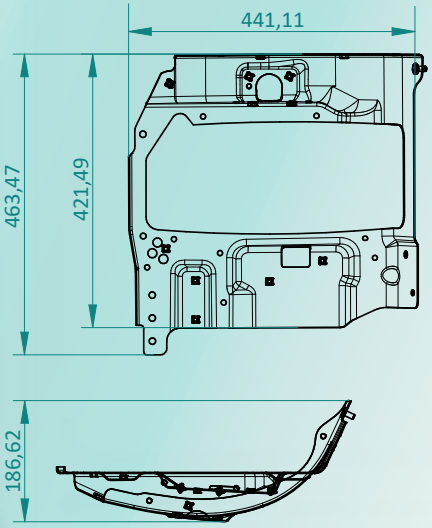



kg 2,08



kg 2,2

311203

Bracket, right → Headlamp

ScR **1853355**

Material: Painted steel

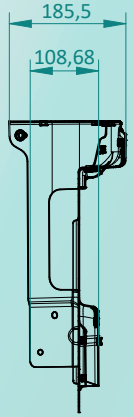

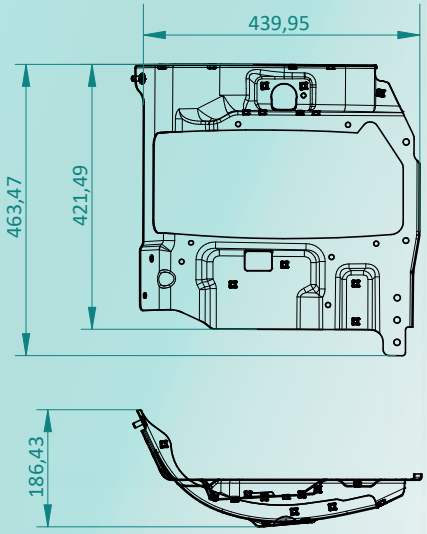

311230

Mounting bracket → Bumber (left)

ScR 1923152 1853186





kg 3,37

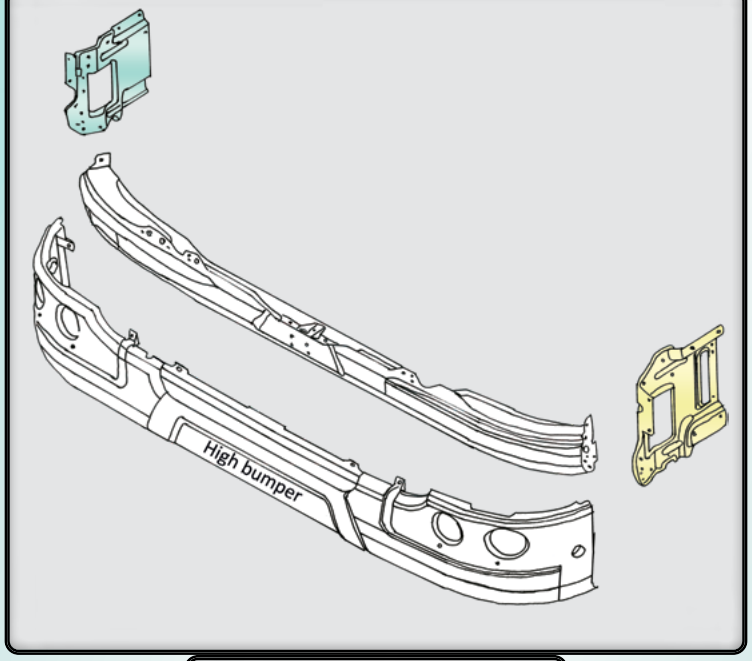

GPR 03/2009 - 2018

2047054→
5226379→
9142034→
3647798→

Material:
Painted 4,5 mm steel

Nut threads:
M08 x 1,25 mm

311231

Mounting bracket → Bumber (right)

ScR 1923153 1853187





kg 3,47

311240

Bracket, left → Bumper beam

ScR 1865196

Material: Painted steel



kg 0,24

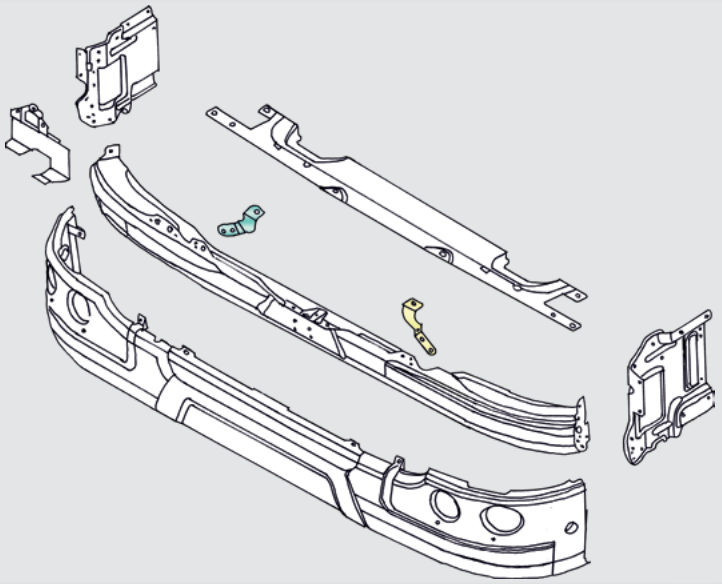

Chassis width 1020 mm

GR	09/2009 - 2018	2049448→ 5230549→ 9144017→ 3655082→
P	11/2011 - 10/2012	2072374 - 2082186 5283478 - 5307797 9165335 - 9172653 3803816 - 3817387

Chassis width 1140 mm

GPR	2004 - 2018

311241

Bracket, right → Bumper beam

ScR 1865197

Material: Painted steel



kg 0,24

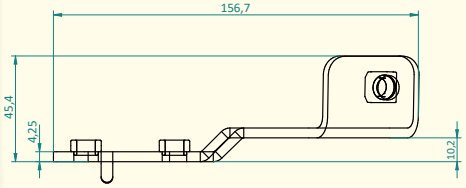

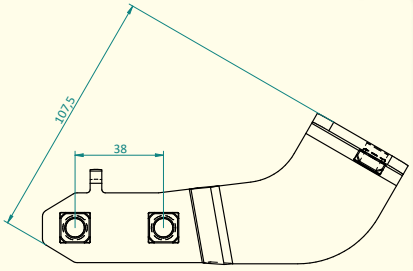

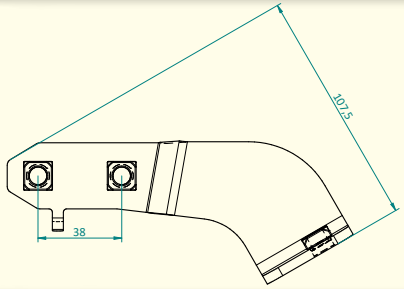

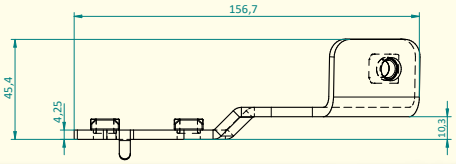

311242

Protective plate → High / Low bumper

ScR **1422851**

Material: Painted steel

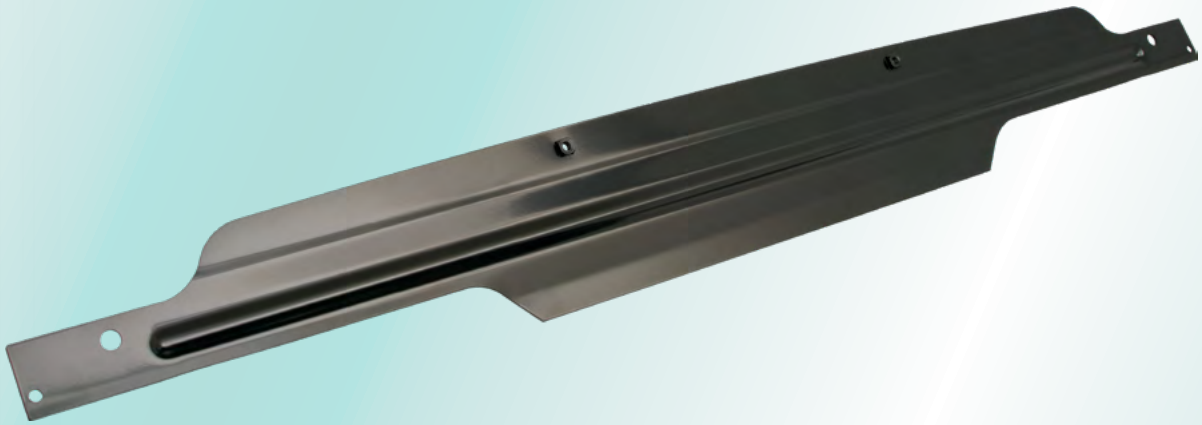

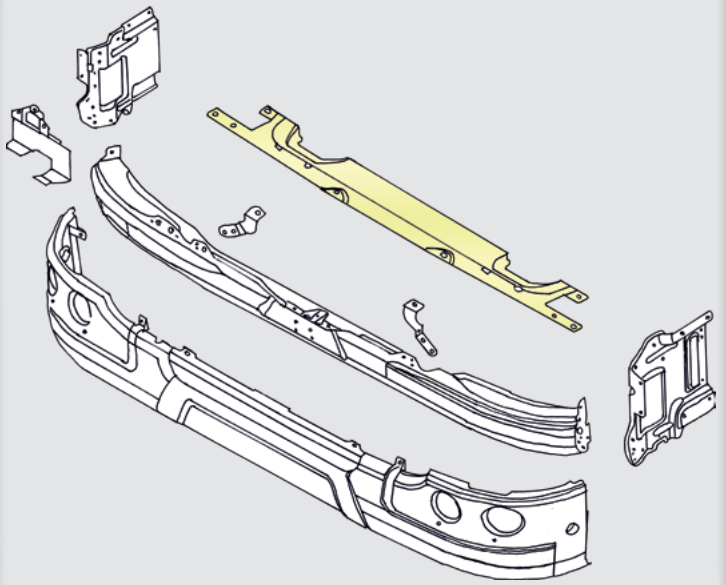

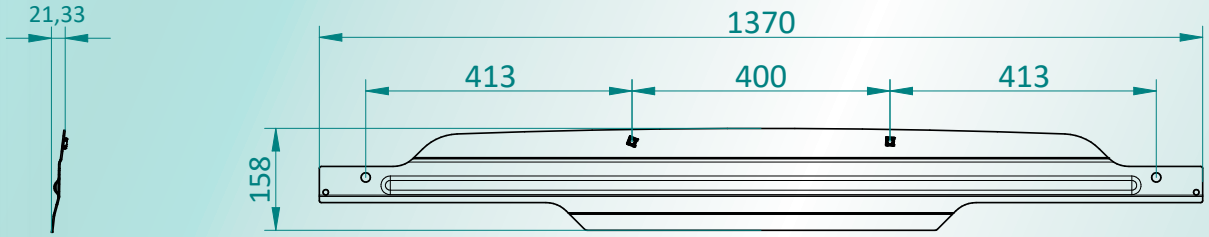

kg 2,53

Chassis width 1020 mm

GR

→11/2009

→2050359 →5232180
→9144887 →3655081

P

→03/2009

→2047053 →5226378
→9142033 →3647797

311243

Protective plate → High / Low bumper

ScR 1790203

Material: Painted steel

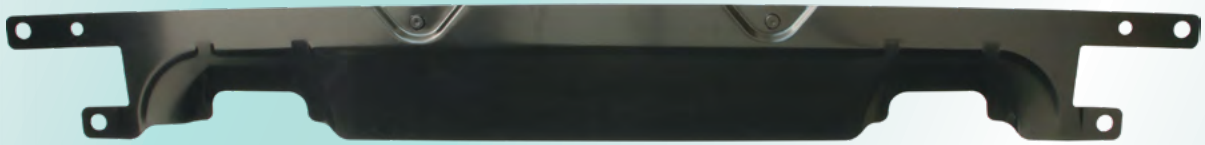

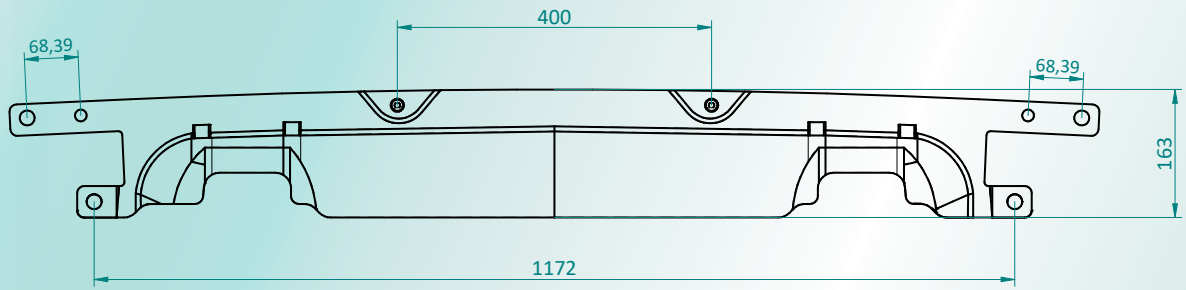



kg 2,8

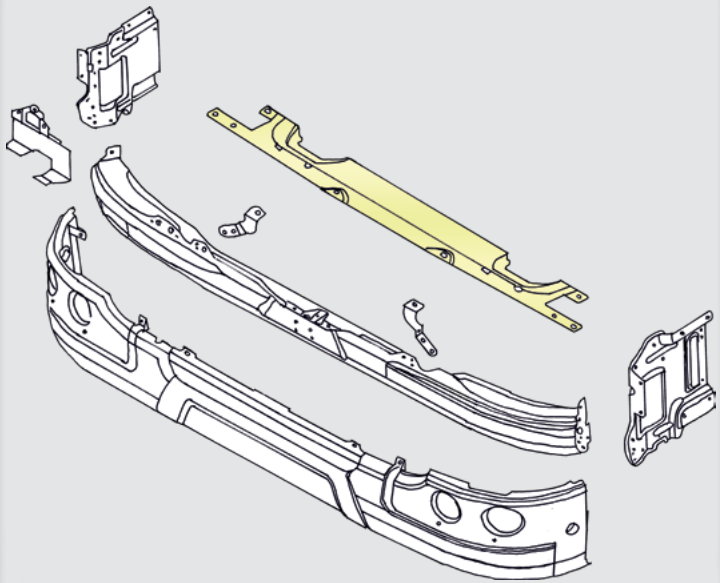

Chassis width 1020 mm

GR	09/2009→		2049448→ 5230549→ 9144017→ 3655082→
P	11/2011 - 10/2012		2072374 - 2082186 5283478 - 5307797 9165335 - 9172653 3800989 - 3817387

Chassis width 1140 mm

GPR	2004 - 2018

311244

Bracket, left → High bumper

ScR 1873215

Material: Painted steel

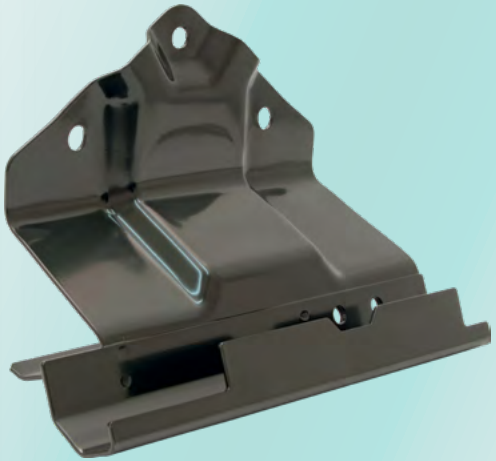



kg 0,9

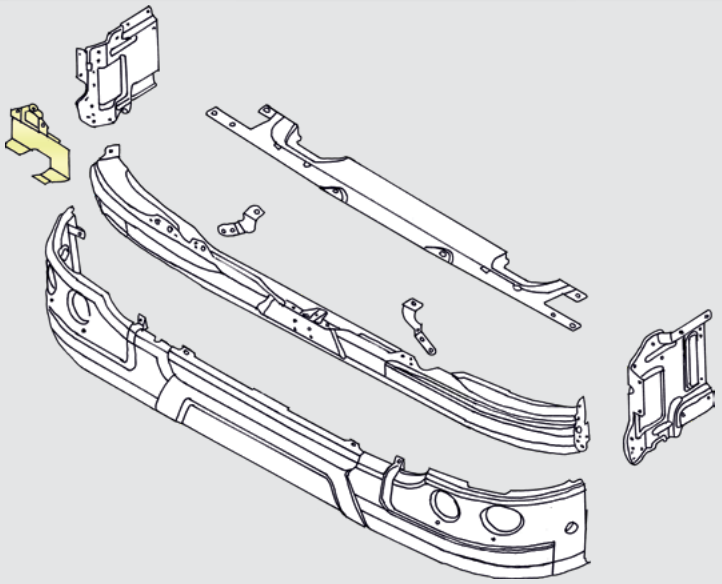

Chassis width 1020 mm		When two pieces mudguard. When new design mudguard.	
GPR	10/2012 → 2018	2082187→ 9172654→	5307798→ 3817388→
Chassis width 1140 mm		Without mudguard.	
GPR	2004 - 2018		

311245

Bracket, right → High bumper

ScR 1873216

Material: Painted steel



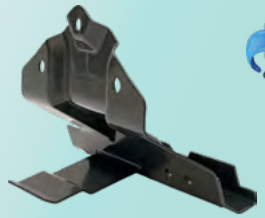

kg 0,88

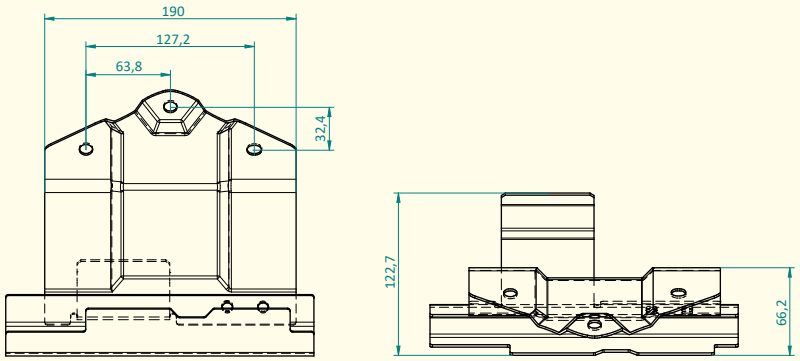

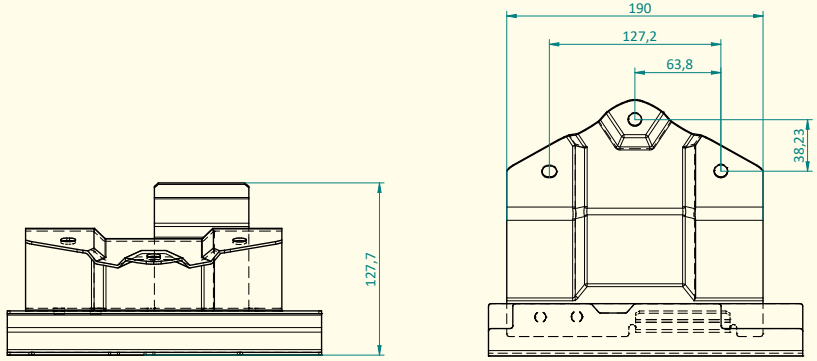

311219

Bracket → bumber

ScR 1853189

Material: Steel



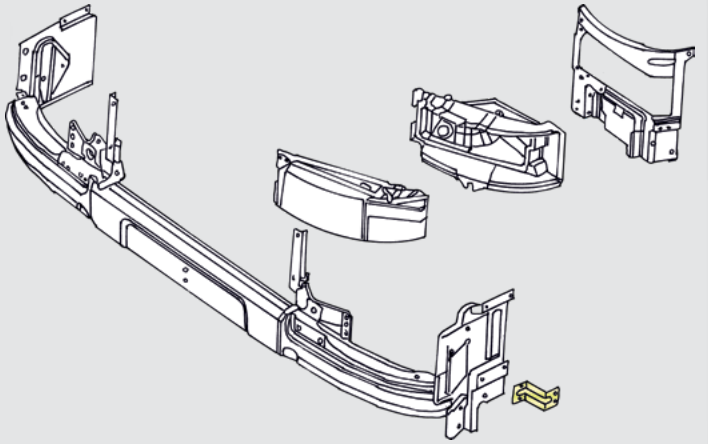

GPR 2004 - 03/2009

→2047053 →5226378 →9142033 →3646437

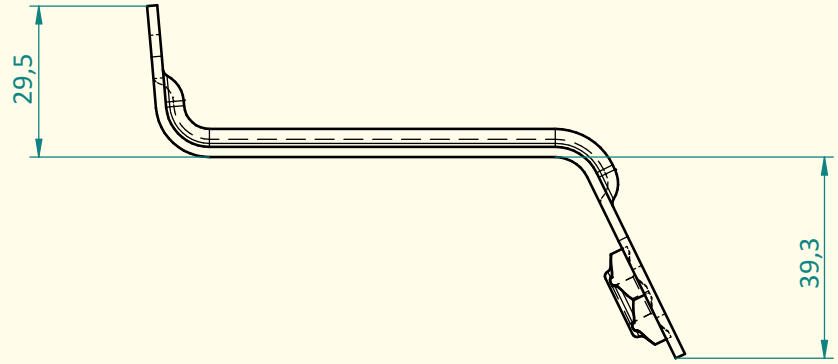

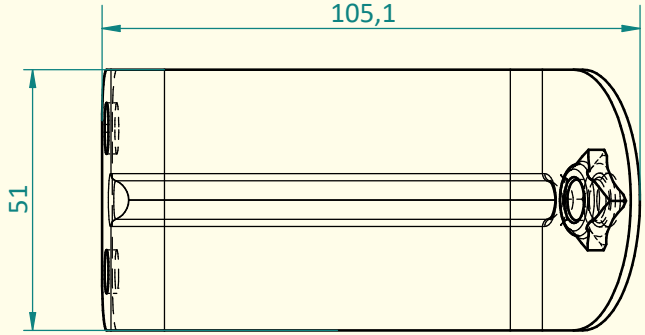

kg 0,14

311198

Bracket assy kit → Spring bracket

ScR

2279383 x 1
815975 x 2
815937 x 2

Material: Iron





kg 1,41

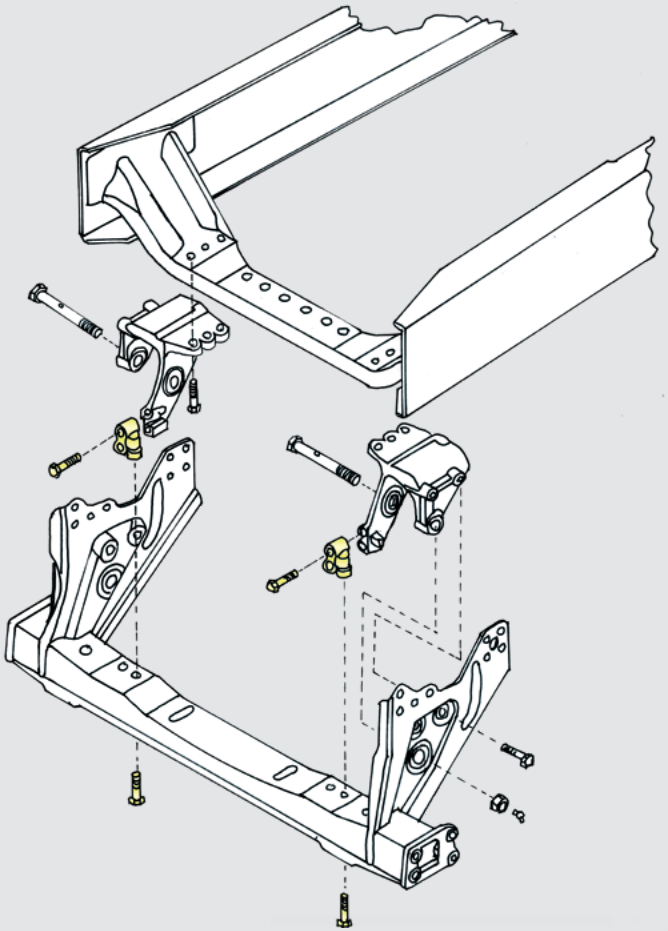

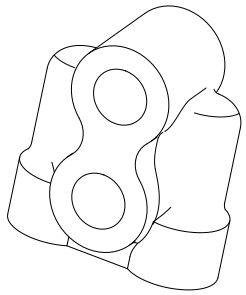

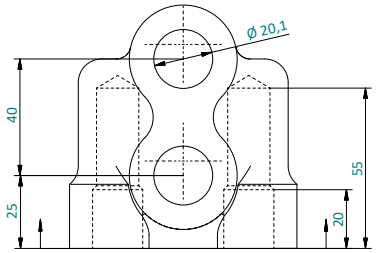

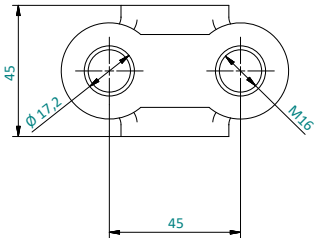







LPGRS

09/2016→

312034

Bracket → leaf spring / air spring

ScR 1377419

Material: Cast iron





kg 9,90

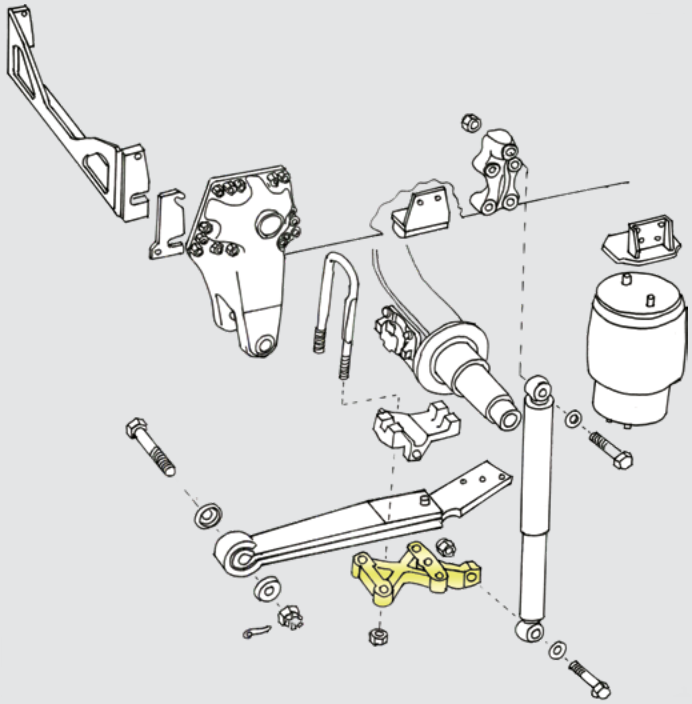

GPR	04/2004 - 2018
94 - 164	06/1995 - 12/2004

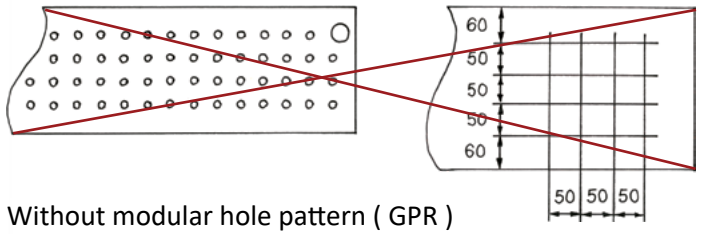

Without modular hole pattern (GPR)

312035

Bracket → leaf spring / air spring

ScR 1377420

Material: Cast iron





kg 9,25

312036

Bracket → leaf spring / air spring

ScR **1383644**

Material: Cast iron





kg 7,47

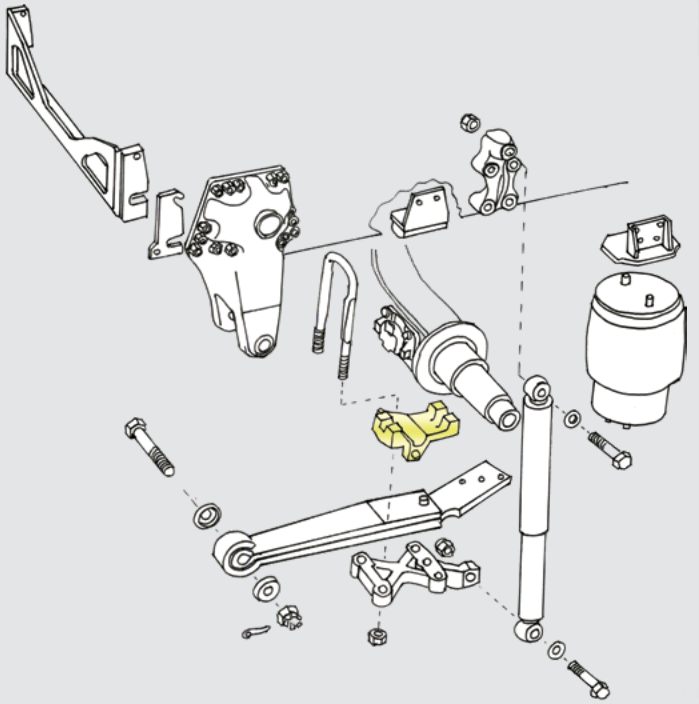

LPGRS	08/2016 →
GPR	04/2004 - 2018
94 - 164	06/1995 - 12/2004

312037

Bracket → shock absorber, upper

ScR **1400484**

Material: Cast iron





kg 1,44

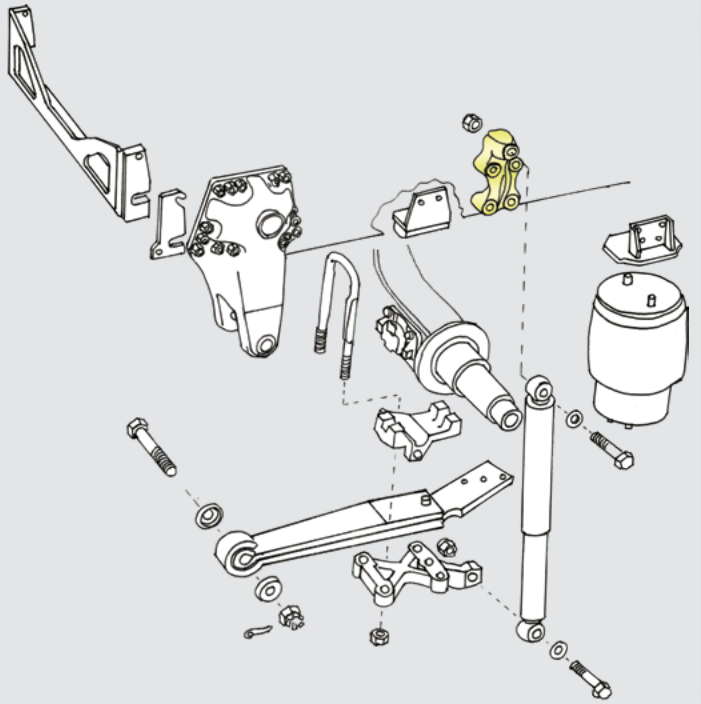

GPR	04/2004 - 2018
94 - 164	06/1995 - 12/2004

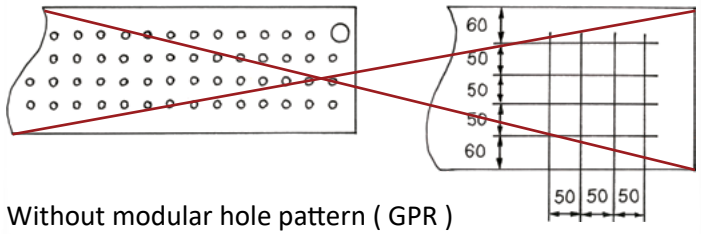

Without modular hole pattern (GPR)

312000

Tight-fit shaft kit

ScR

1328010
285185
285183
807356

This kit is HD´s own creation.
Scr numbers are for individual parts.

Material: Steel

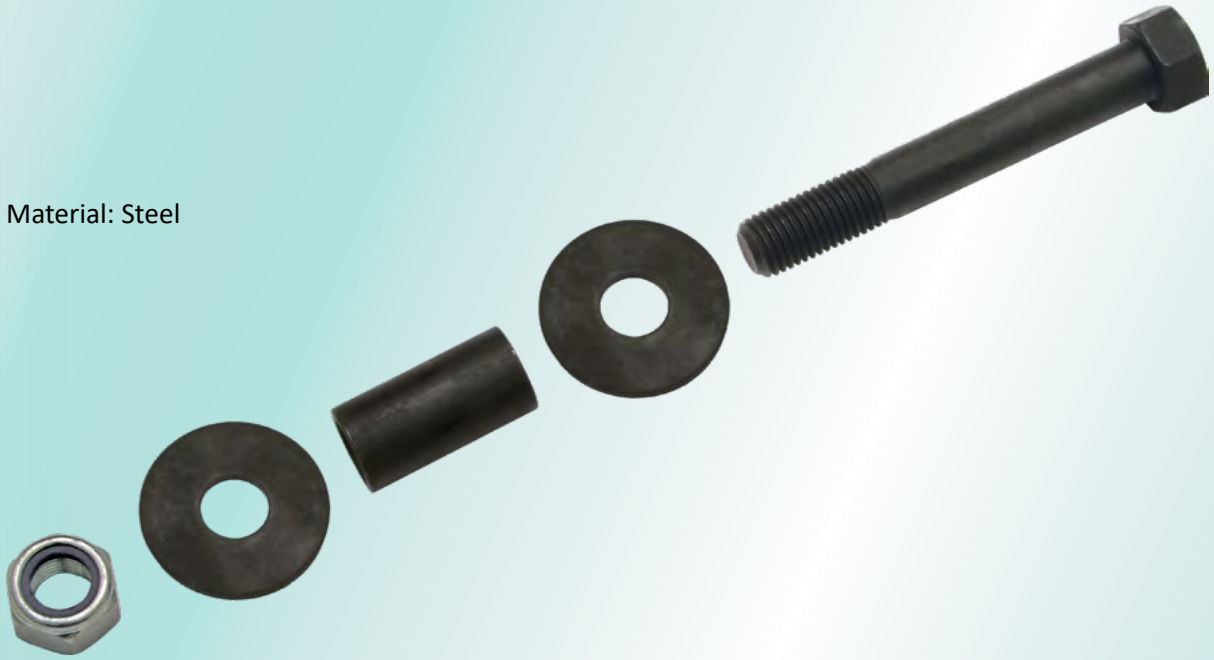

kg 0,39

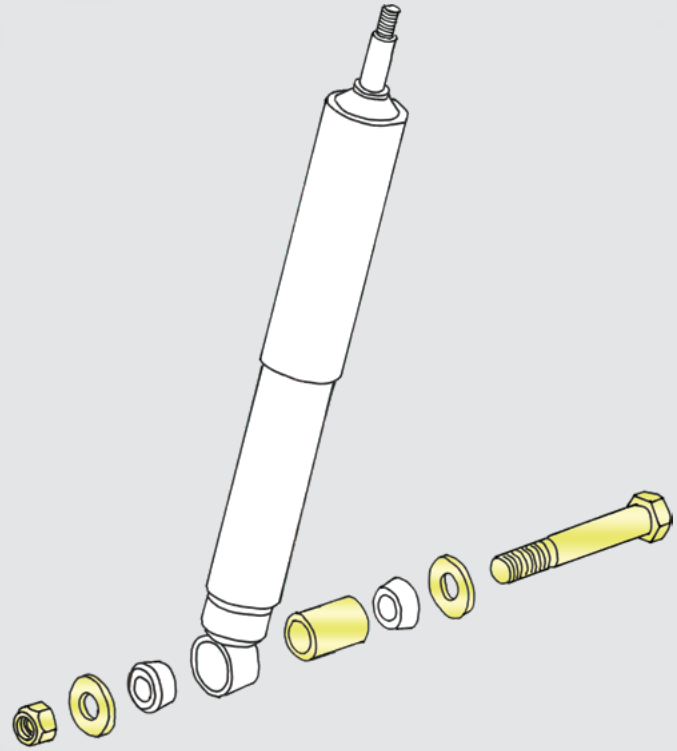

GPR	2004 - 2018
94 - 164	1994 - 2008
93 - 143	1987 - 1996

312050

Shaft kit

ScR

1548054
+
816089
+
805479



ScR **805479** 6,3 x 63 mm

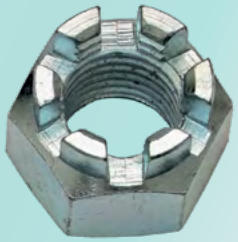

ScR

816089
811911

ScR

1548054
255315

M30 x 3,5 mm
8.8



kg 1,72

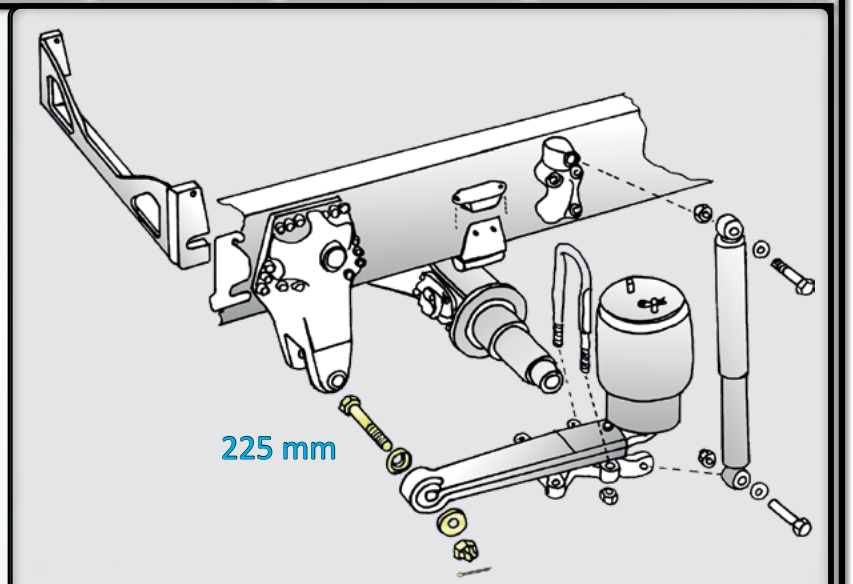

LPGRS	08/2016 →
GPR	04/2004 - 2018
94 - 164	06/1995 - 12/2004
93 - 143	1987 - 1996

312046

Shaft kit

ScR

1548055
+
816089
+
805479



ScR **805479** 6,3 x 63 mm

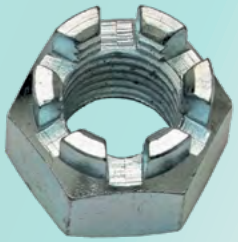

ScR

816089
811911

ScR

1548055
1338491

M30 x 3,5 mm
8.8



kg 1,84

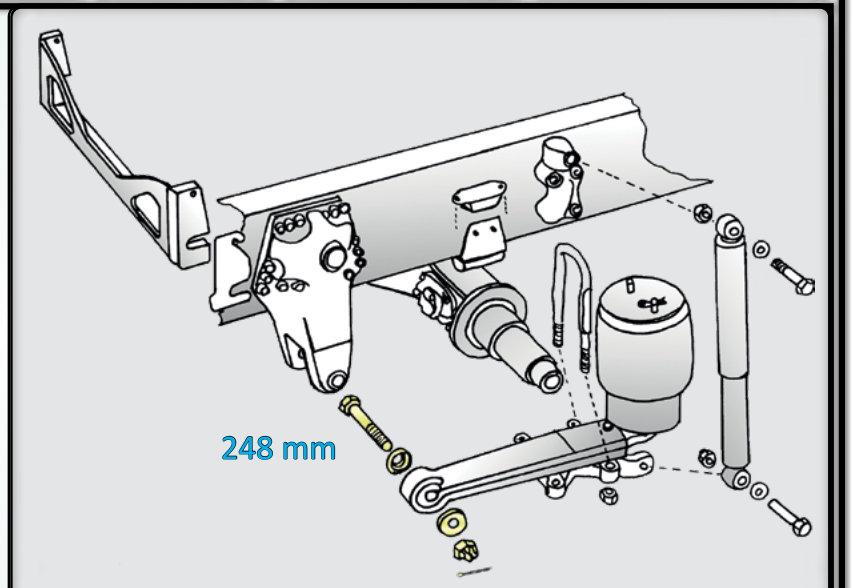

GPR	04/2004 - 2018
94 - 164	06/1995 - 12/2004
93 - 143	1987 - 1996

LPGRS

312044

Side plate

ScR **1367370**

Material:
- Steel

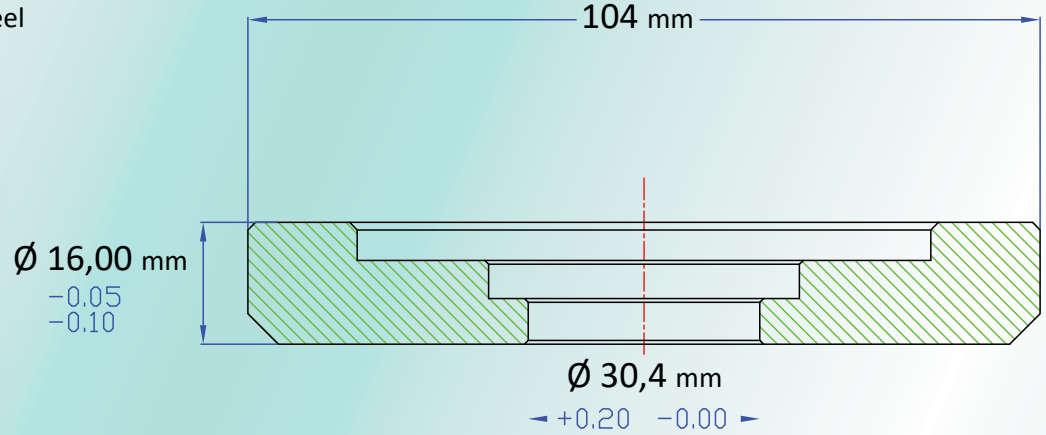

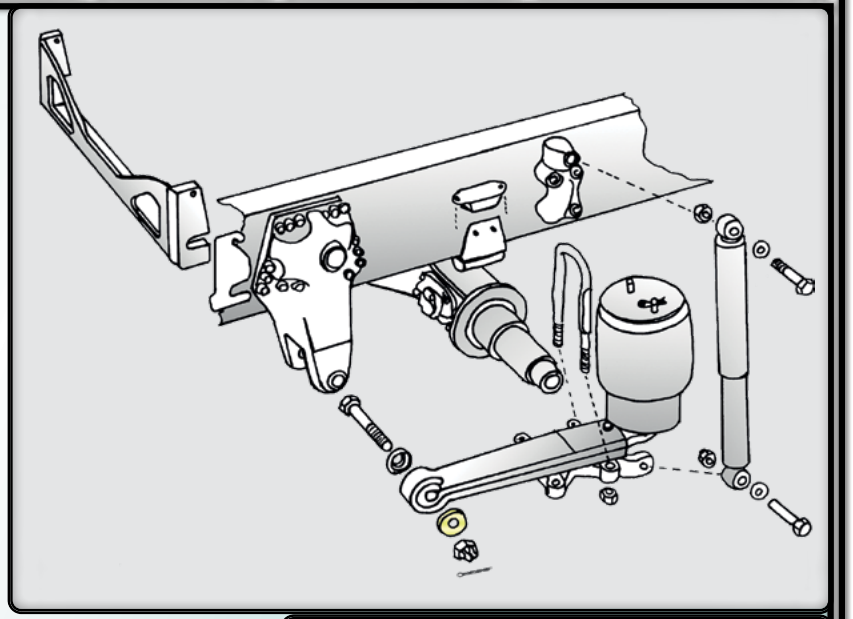

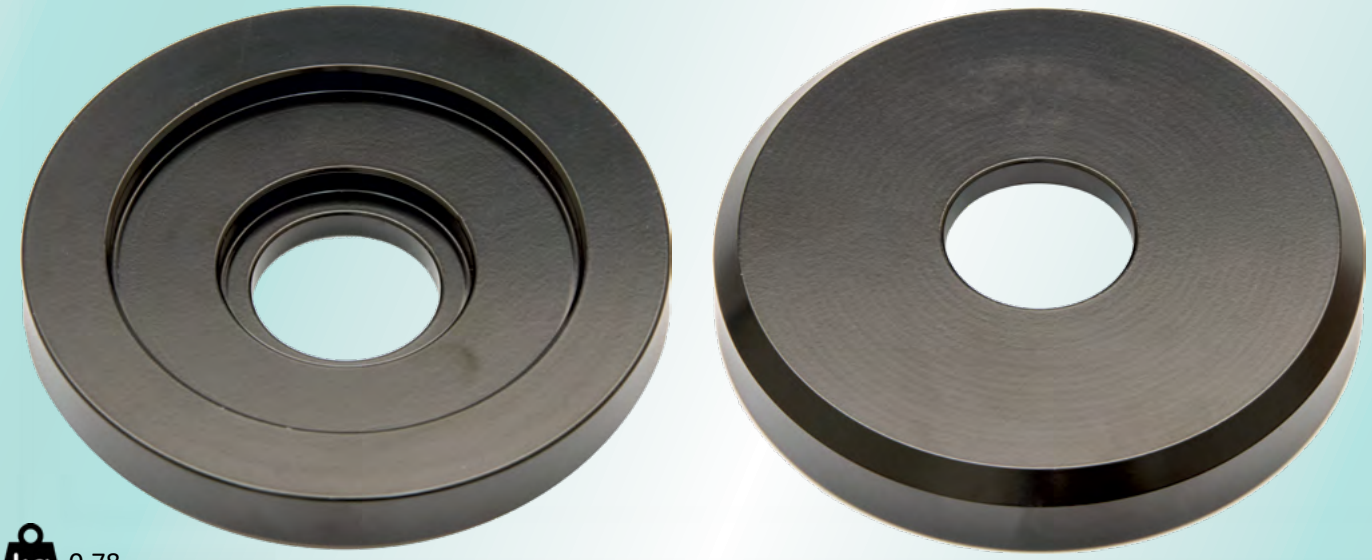

kg 0,78

LPGRS	08/2016 →
GPR	04/2004 - 2018
94 - 164	06/1995 - 12/2004
93 - 143	1987 - 1996

312042

Bushing

ScR 1362710

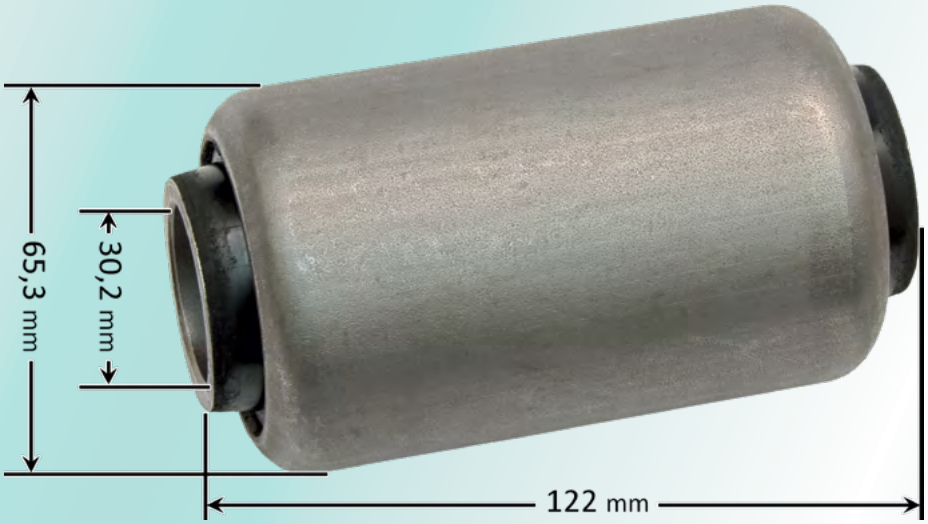

kg 1,05

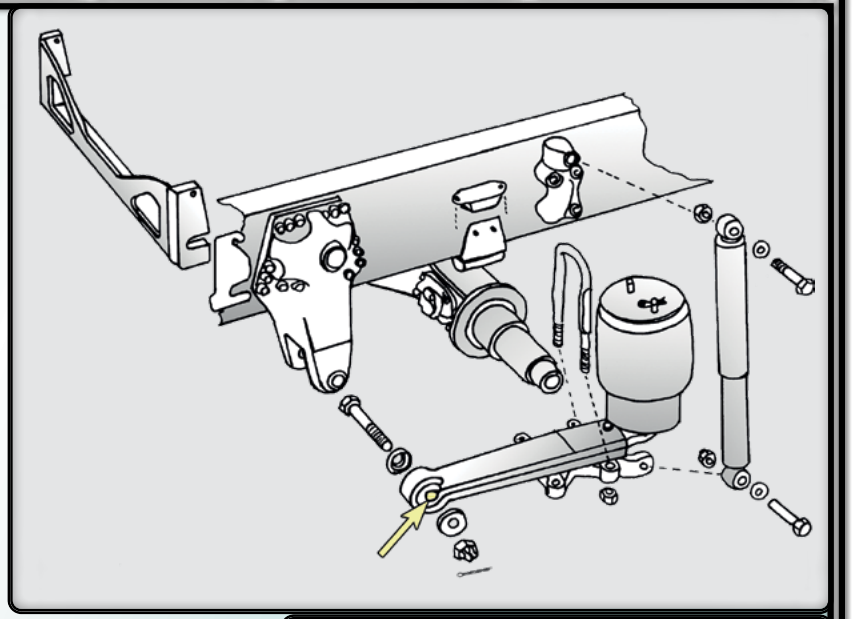

Materials:
- Steel
- Rubber

GPR	04/2004 - 2018
94 - 164	06/1995 - 12/2004
93 - 143	1987 - 1996

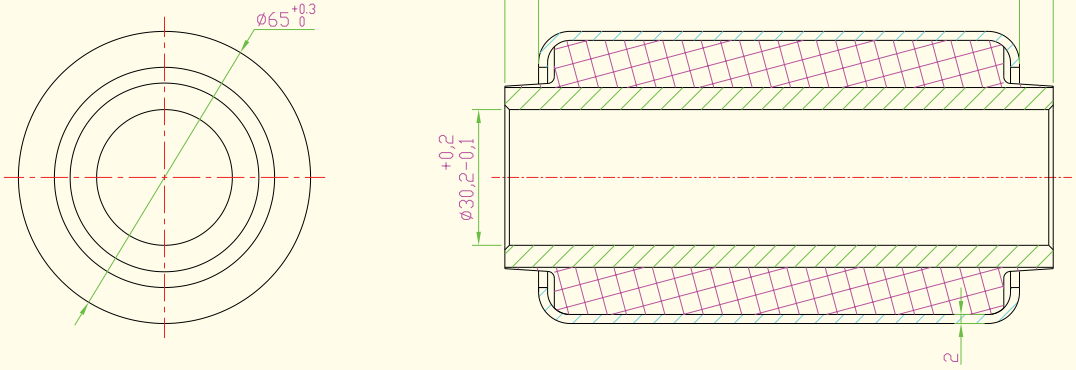

Clearance product !

312040

Bushing kit

ScR 2130492

HD 312042
ScR 1362710

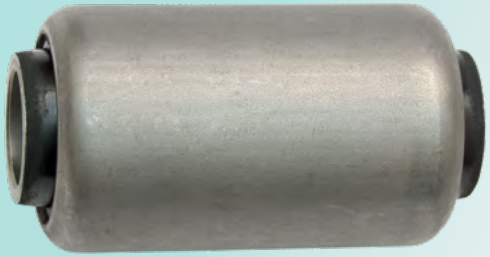

Ø 30,2 mm
Ø 65,3 mm
L = 122 mm

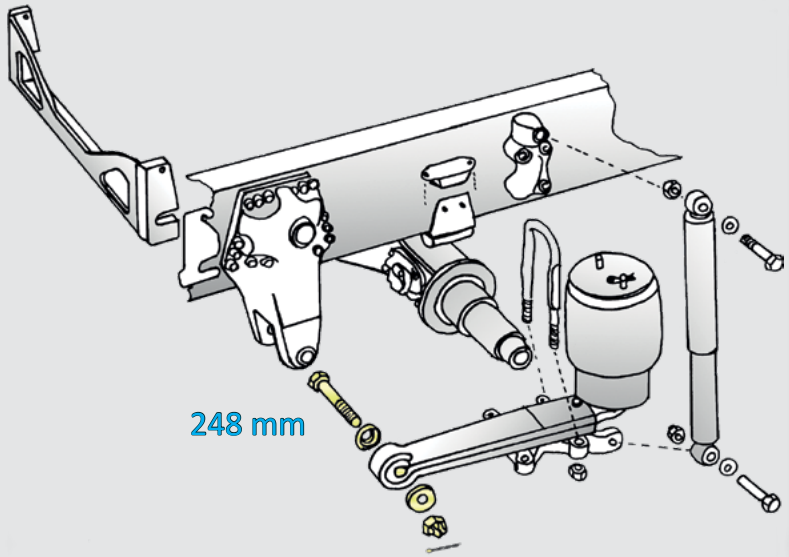

HD 312044
ScR 1367370

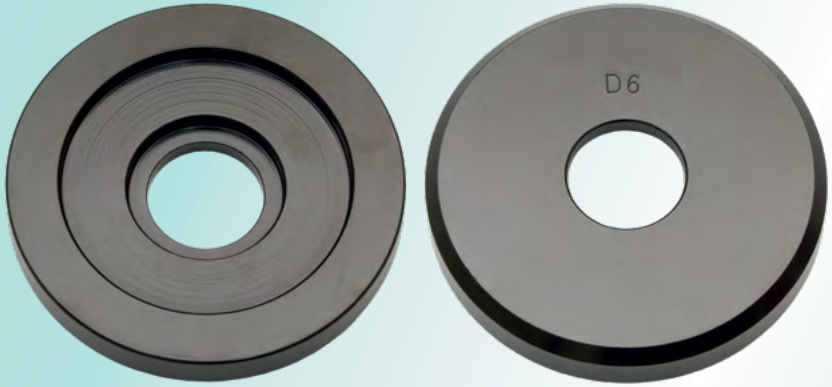

Ø 30,3 mm
Ø 104 mm
s = 16 mm

GPR	04/2004 - 2018
94 - 164	06/1995 - 12/2004
93 - 143	1987 - 1996

HD 312046
ScR 1548055

M30 x 3,5 mm
8.8





ScR 805479 6,3 x 63 mm

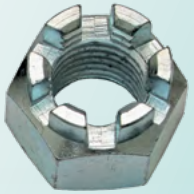

ScR 816089 811911

kg 4,57

312060

Sensor → High level control of air suspension **ELC 3 / T72**

ScR

2099046
1495828

Reference numbers:

Wabco **441 050 100 0**
Wabco **441 050 101 0**



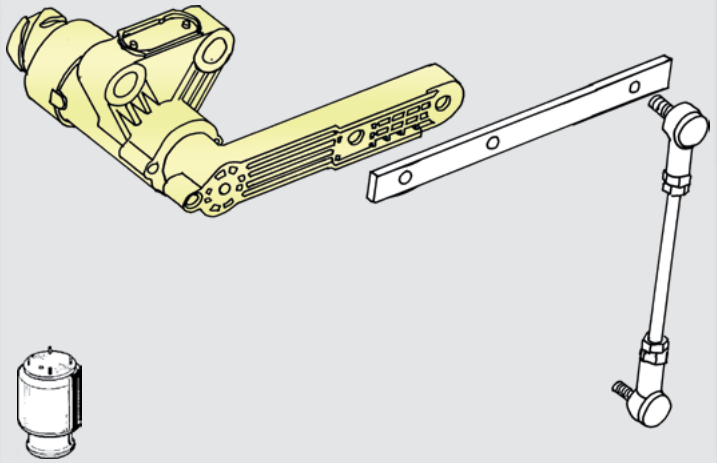

ELC 3 / T72

GPR 04/2004 - 2018

ECAS **E**lectronically **C**ontrolled **A**ir **S**uspension
ELC **E**lectronic **L**evel **C**ontrol

Suitable bayonet connector:
HD **317032**



DIN 72585-A1

Suitable sensor also for bus → HD 312072

Suitable sensor for ELC 4 → HD 312061

kg 0,2

Material: Plastic

312061

Sensor → High level control of air suspension **ELC 4 / T72**

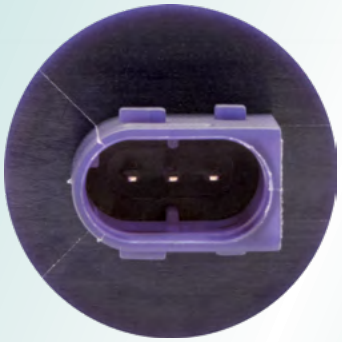

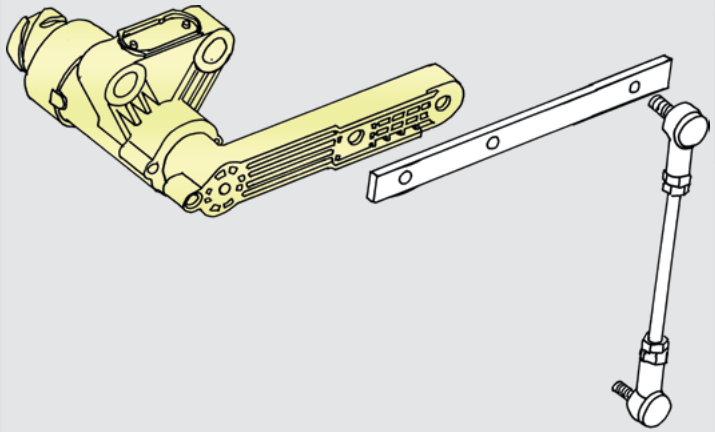

ScR **1889797**

Reference numbers:

Wabco **441 050 201 0**
Wabco **441 050 202 0**

Material: Plastic



kg 0,19

LPGRS	08/2016→	**ELC 4 / T72**
GPR	04/2004 - 2018	

ECAS **E**lectronically **C**ontrolled **A**ir **S**uspension
ELC **E**lectronic **L**evel **C**ontrol

KN	11/2005→	**ELC 4 / T72**

ECAS **E**lectronically **C**ontrolled **A**ir **S**uspension
ELC **E**lectronic **L**evel **C**ontrol

312072

Sensor → High level control of air suspension **ELC 3 / T72**

ScR

2110474
1448082

Reference numbers:

Wabco **441 050 120 0**
Wabco **441 050 122 0**

Material: Plastic



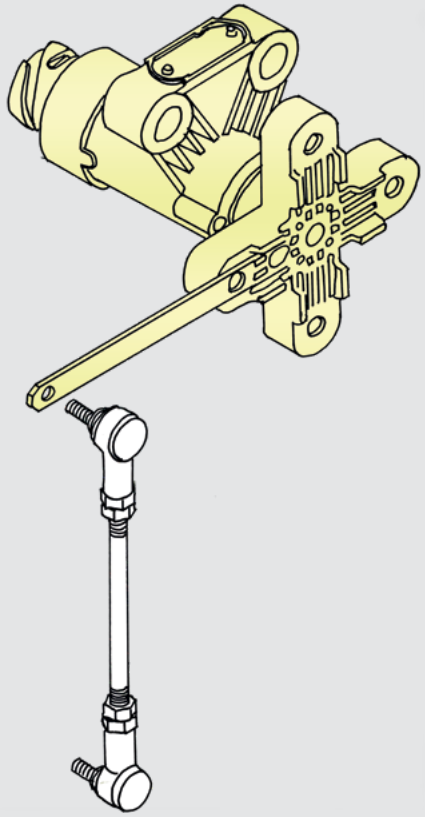

ELC 3 / T72

KN 11/2005→

Suitable bayonet connector:
HD **317032**
16
DIN 72585-A1

kg 0,19

Suitable sensor for truck →
HD 312060 (ELC3/T42)
HD 312061 (ELC4/T42)

312087

Joint for link

ScR

218566
628447

VoR

948372
959085

Materials:
- Aluminium
- Nylon

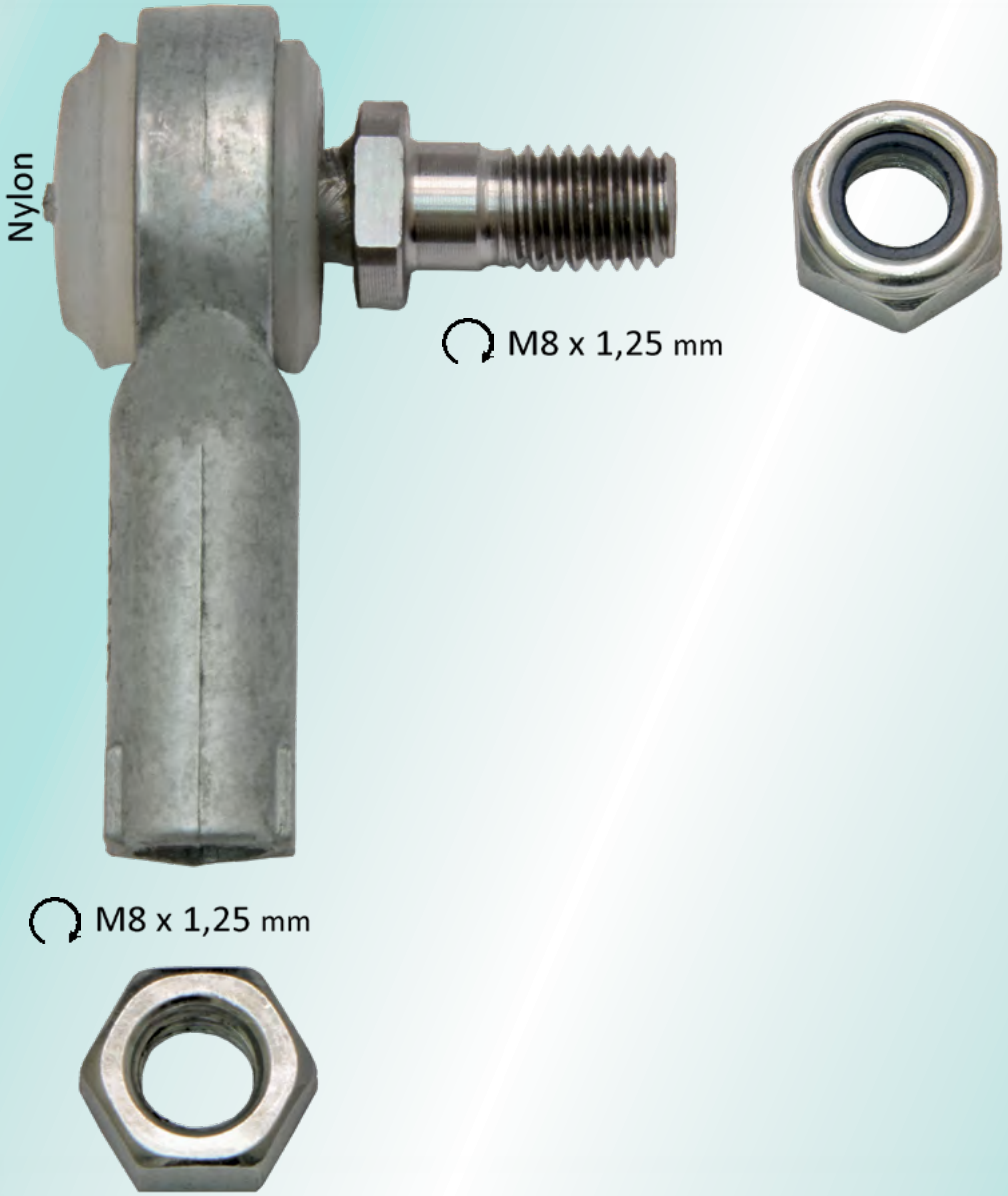

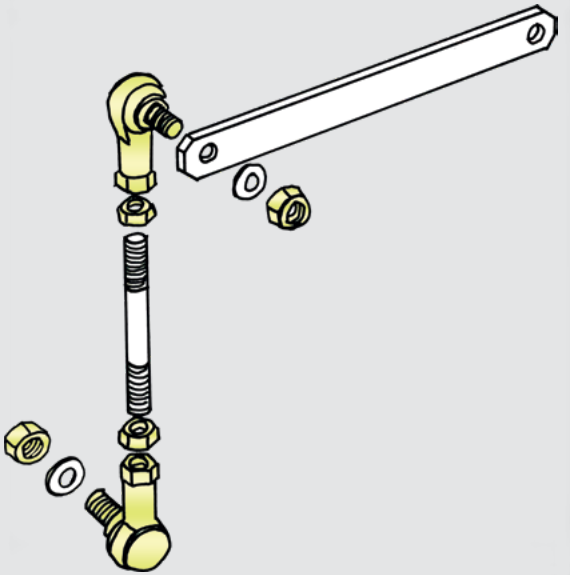

kg 0,06

GPR	04/2004 - 2018
94 - 164	06/1995 - 12/2004
93 - 143	
92 - 142	

KN	11/2005→
94, 114, 124	10/1997 - 11/2006
93, 113	
82, 92, 112	

312063

ex. 301040

Sensor → air brake / air suspension T70
With advanced ceramic chips

Suitable bayonet connector:
HD 317032
16
DIN 72585-A1

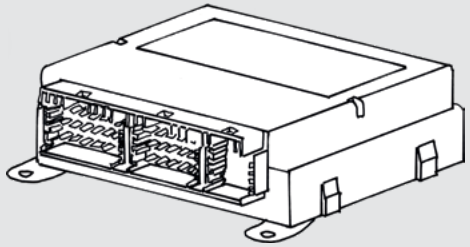

E18 ELC3

ECU Electronic control unit
SMS Suspension managment system
ELC Electronic level control



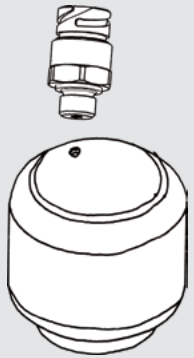

ScR

Wabco Reference:

1781199	441 044 105 0
1541703	441 044 105 0
1448083	441 040 017 0

Above are with Scania text ↑

MBR

001 542 1718
003 542 2518
005 542 5818

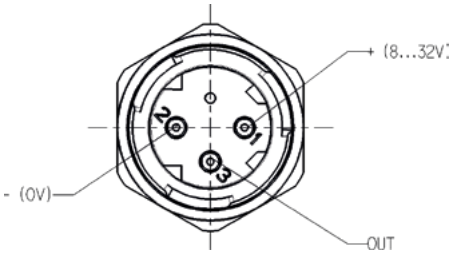



ManR

81.27421-0163
81.27421-0244
81.27421-0268
88.25503-0091

DAF R 1506009



Sensor ScR 1781199 with
Gasket ScR 2279229
Ø 16,7 x 24 x 1,5 mm
Rubber bonded

Material: Aluminium

M16 x 1,5 mm
Tightening 27 +/-2 Nm with O-ring
Tightening 37 +/-2 Nm with sealing ring

kg 0,05

GPRS	08/2016 → Brake only
GPR	04/2004 - 2018
94 - 164	06/1995 - 12/2004

MB Actros, Ateco, Antos, Arocs, Axor, Econic
MAN TGA, TGL, TGM, TGS, TGX
DAF

Scania KN 11/2005→ 94, 114, 124
MB O 500, Setra S 400
MAN Neoplan

312064

Sensor → air brake / air suspension T70
With advanced ceramic chips

ScR

Wabco Reference:

1889798 **441 044 202 0**

Material: Aluminium

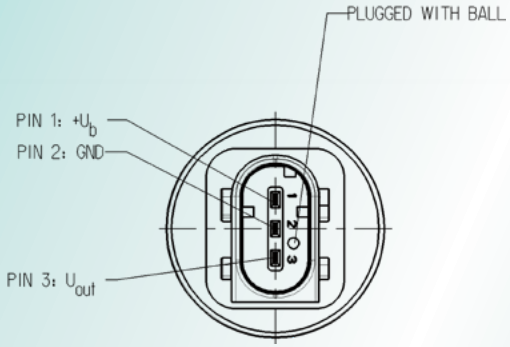





kg 0,06

M16 x 1,5 mm
Tightening 27 +/-2 Nm with O-ring
Tightening 37 +/-2 Nm with sealing ring

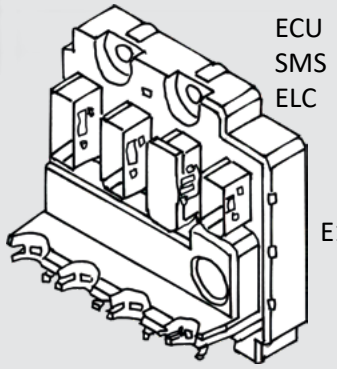

ECU Electronic control unit
SMS Suspension managment system
ELC Electronic level control

E18 ELC4

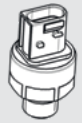





GPRS 08/2016 →
GPR 04/2004 - 2018

94, 114, 124

KN 11/2005→

94, 114, 124

Spring clamp assembly kit info

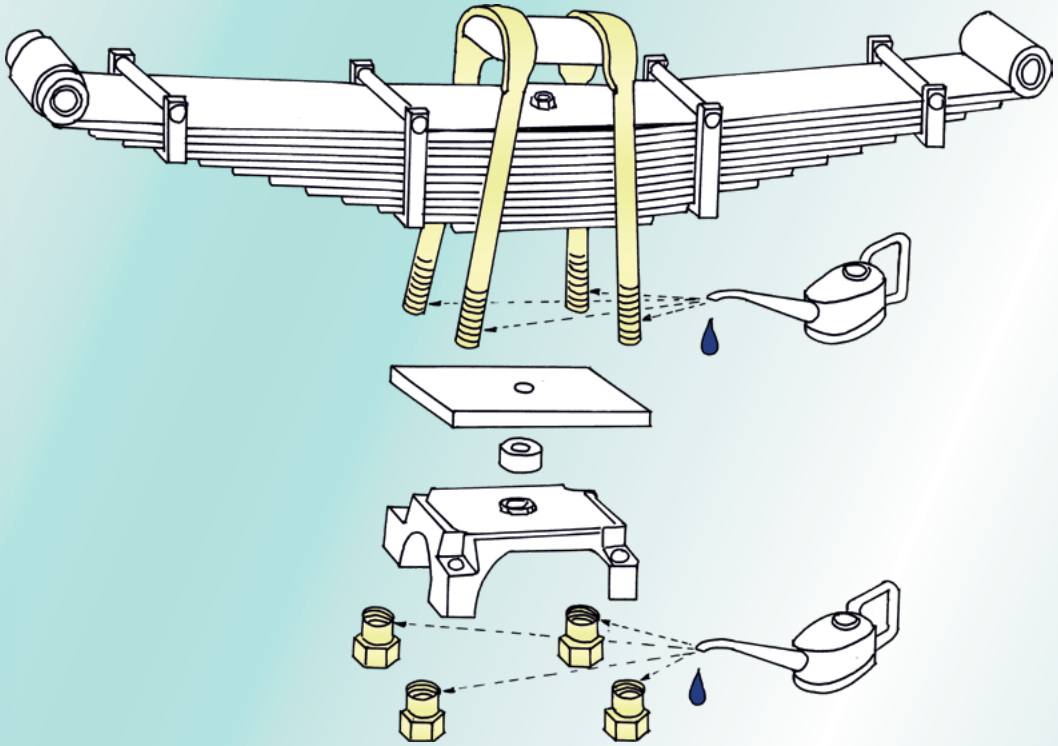

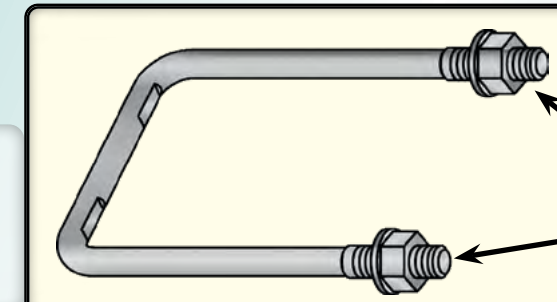

Scania Multi information:

IMPORTANT! Always use new U-bolts and nuts and new washers and screws.

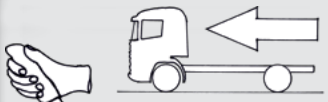

1. Round

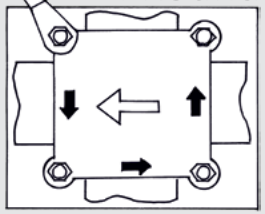

M22: 124 Nm = 12,6 Kpm
M24: 152 Nm = 15,5 Kpm
M30: 200 Nm = 20,4 Kpm

2. Round

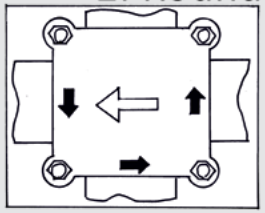

M22: 310 Nm = 31,6 Kpm
M24: 380 Nm = 38,7 Kpm
M30: 500 Nm = 51,0 Kpm

3. Round

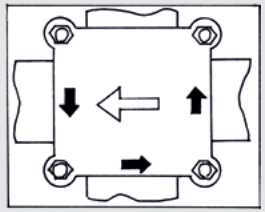

M22: 465 Nm = 47,4 Kpm
M24: 570 Nm = 58,1 Kpm
M30: 1000 Nm = 102,0 Kpm

4. Round

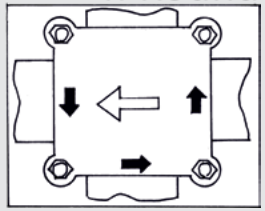

M22: 620 Nm = 63,2 Kpm
M24: 760 Nm = 77,5 Kpm
M30: + 120º

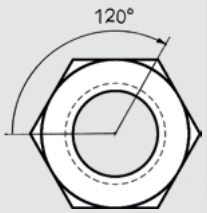

312120

Spring clamp assembly kit 405 mm +/- 5 mm

ScR

1858617 Kit
2064010 Single
1384850 Single



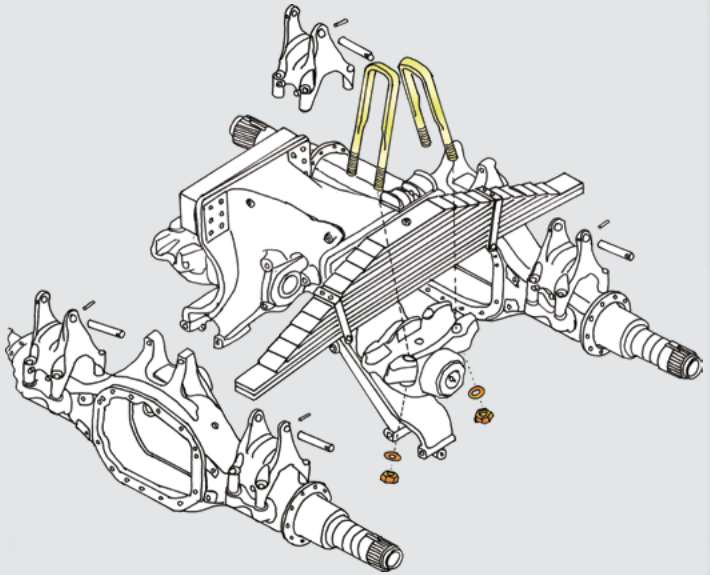

Clamp:

Ø 30 mm M30 x 3,5 x 100 mm +/-7mm 5-6H
Width: 96 mm (+/-1 mm)
40Cr (HRC34-38)
Tensile strength 10.9 >1040N/mm²
Dark Grey bake paint / Surface treatment

Tensioner:

M30 x 3,5 x 25 mm (+/-1 mm) 5-6H
40Cr (HRC28-32) Phosphate
Wrench 32mm (+/-0,5 mm)
Tensile strength 10

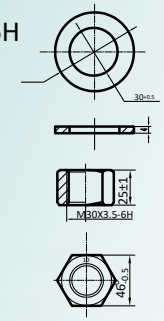

Disc:

30 x 56 x 4 mm (+/-0,5 mm)
Tensile strength 8

kg 5,3

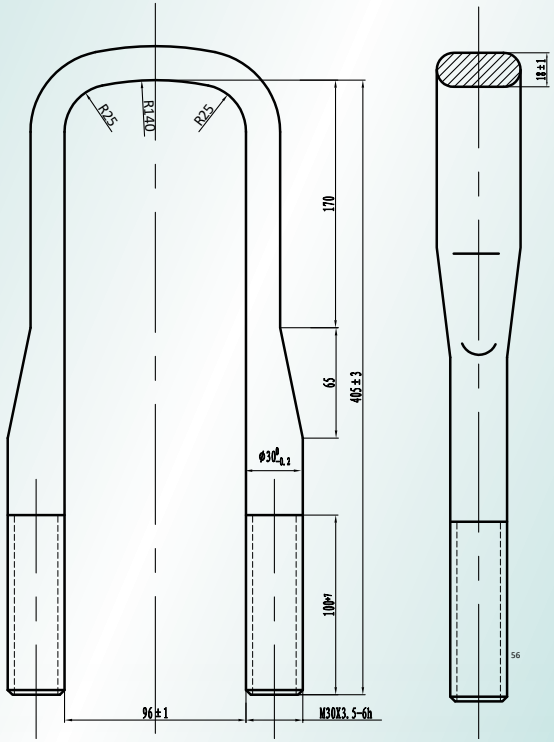

LPGRS	08/2016 →	BT 300,	BT 301
GPR	2004 - 2018	BT 300,	BT 301
94 - 164	1994 - 2008	BT 300,	BT 301

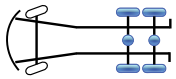
6 x 4

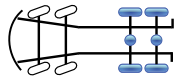
8 x 4



2x41 + 2x48 mm	LPGRS	GPR	
5 x 48/90 mm	LPGRS	GPR	
8 x 30/90 mm	LPGRS	GPR	94-164



10 x 25/90 mm		GPR	94-164
12 x 20/90 mm	LPGRS	GPR	94-164

312121

Spring clamp assembly kit 340 mm +/- 5 mm

ScR

2096154
1939666 +
1386107 +
1386106



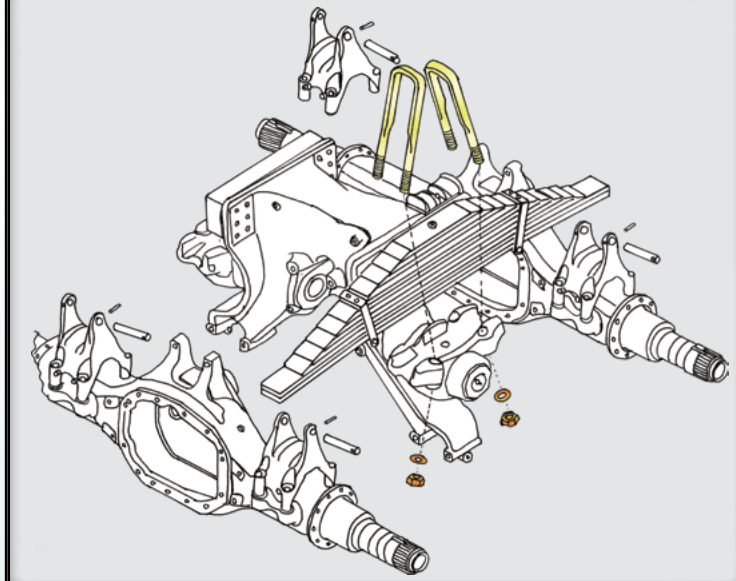

Clamp:

Ø 30 mm M30 x 3,5 x 95 mm +/-7mm 5-6H
Width: 96 mm (+/-1 mm)
40Cr (HRC34-38)
Tensile strength 10.9 >1040N/mm²
Dark Grey bake paint / Surface treatment

Tensioner:

M30 x 3,5 x 25 mm (+/-1 mm) 5-6H
40Cr (HRC28-32) Phosphate
Wrench 32mm (+/-0,5 mm)
Tensile strength 10

Disc:

30 x 56 x 4 mm (+/-0,5 mm)
Tensile strength 8

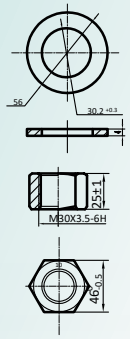

kg 4,6

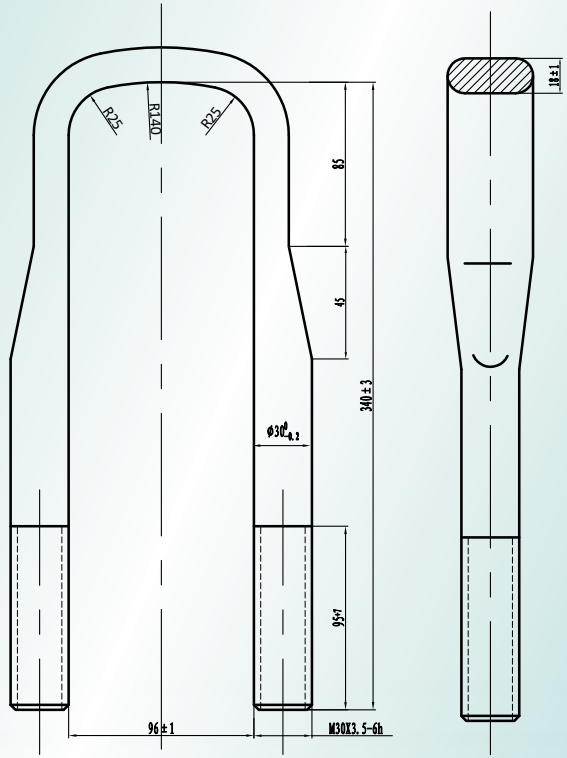

LPGRS	08/2016 →	BT300 B/I, BT301 I/S
GPR	2004 - 2018	BT300, BT300 B, BT301 I/S



Parabolic 4-leaf 2x41 + 2x48 mm

312122

Spring clamp assembly kit 325 mm +/- 5 mm

ScR

1858616
2096127
1384851 +
1386107 +
1386106



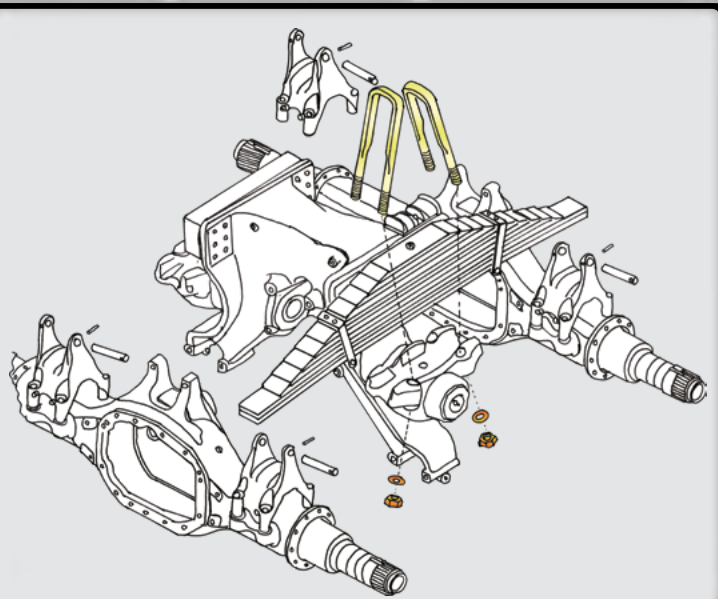

Clamp:

Ø 30 mm M30 x 3,5 x 95 mm +/-7mm 5-6H
Width: 96 mm (+/-1 mm)
40Cr (HRC34-38)
Tensile strength 10.9 >1040N/mm²
Dark Grey bake paint / Surface treatment

Tensioner:

M30 x 3,5 x 25 mm (+/-1 mm) 5-6H
40Cr (HRC28-32) Phosphate
Wrench 32mm (+/-0,5 mm)
Tensile strength 10

Disc:

30 x 56 x 4 mm (+/-0,5 mm)
Tensile strength 8

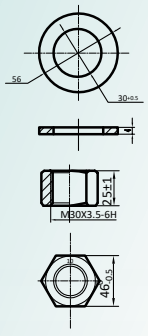

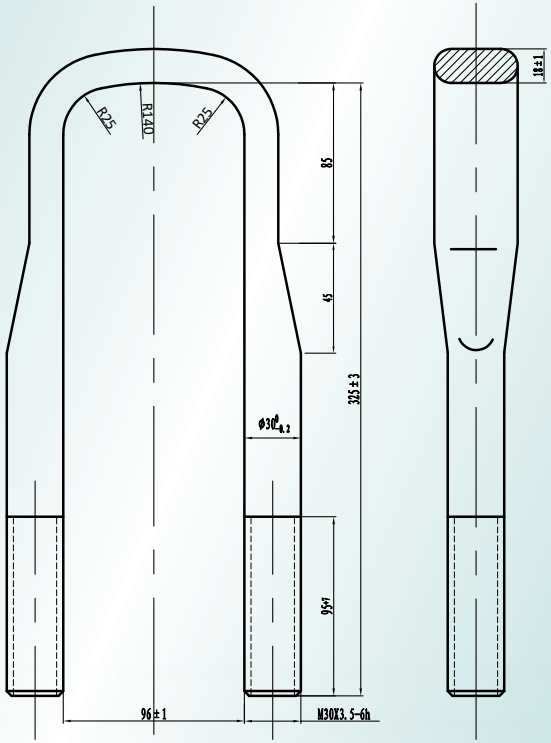

kg 4,46

LPGRS	08/2016 →	BT 201 B/I	
GPR	2004 - 2018	BT 201	4 x 41 mm
GPR	2004 - 2018	BT 300	2x38 + 2x45 mm
94 - 164	1994 - 2008	BT 300	4 x 41 mm



Parabolic 4-leaf
- 4 x 41 mm
- 2x38 + 2x45 mm

312140

Spring clamp assy 310 mm +/-5 mm

ScR

2154121
550296
2030493
1739282



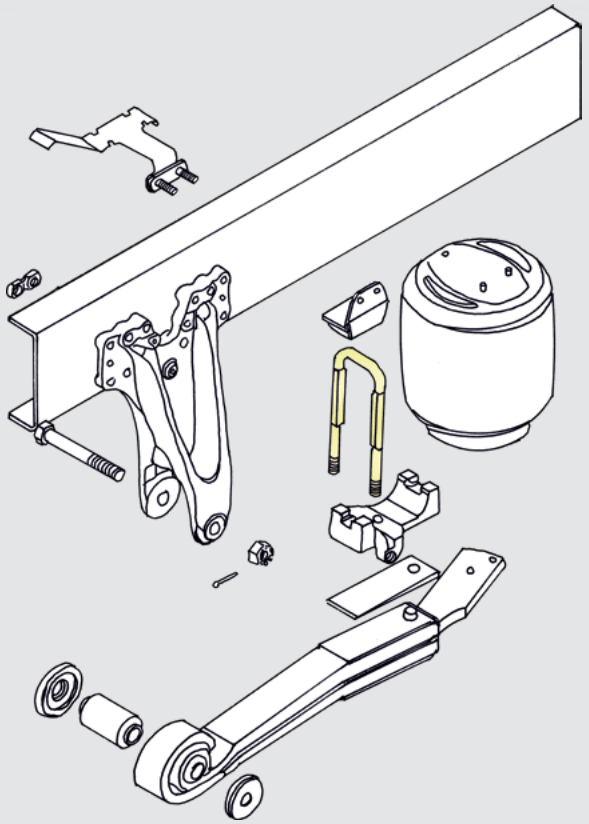

Clamp:

Ø 22 mm
M24 x 3,0 x 45 mm +/-5mm 6H
Width: 104/105 mm (+/-1 mm)
40Cr (HRC34-38)
Tensile strength 10.9 >1040N/mm²
Dark Grey bake paint / Surface treatment

Tensioner:

M24 x 3,0 x 20 mm (+/-1 mm) 6H
40Cr (HRC28-32) Phosphate
Wrench 36mm (+/-0,5 mm)
Tensile strength 10

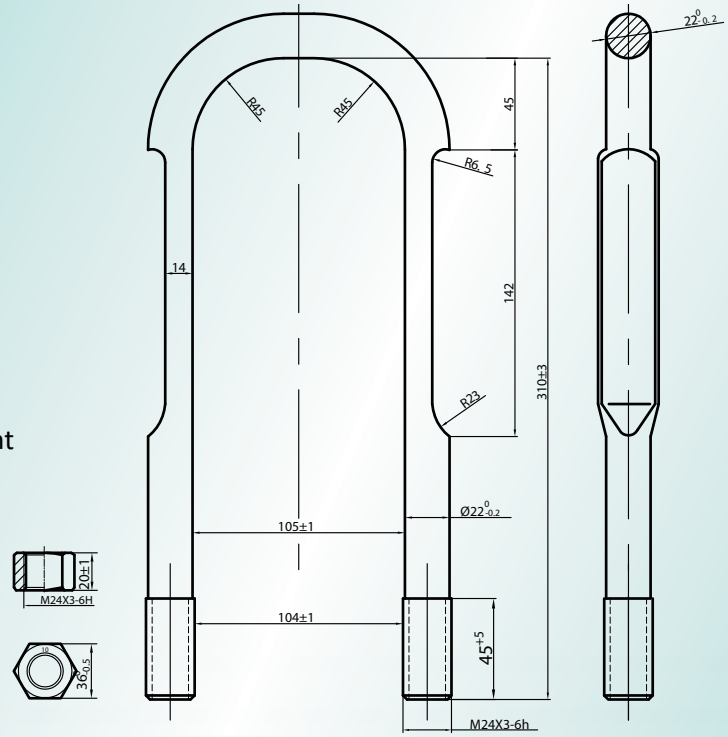

kg 2,35

Rear axle Tag axle

LPGRS	08/2016 →
GPR	04/2004 - 2018
94 - 164	06/1995 - 12/2004

HD 312143

ScR 2096146 1859923

Spring clamp assy 330 mm +/-5 mm

HD 312144

ScR 1859924 2096147 1744172

Spring clamp assy 345 mm +/-5 mm

HD 312145

ScR 2096148 1859925

Spring clamp assy 360 mm +/-5 mm

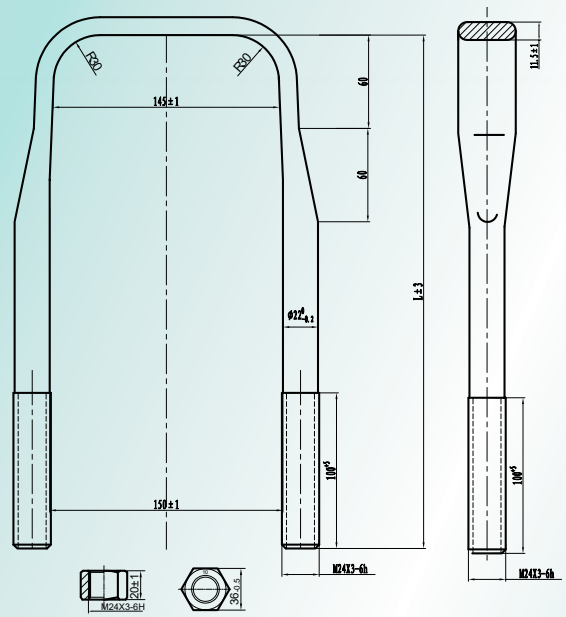

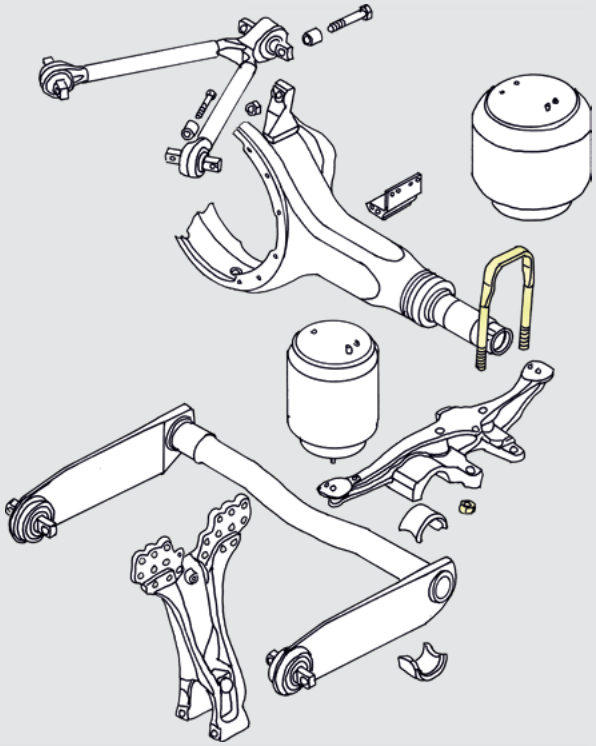



Clamp:

Ø 22 mm
M24 x 3,0 x 100 mm +/-5mm 6H
Width: 145 / 150 mm (+/-1 mm)
40Cr (HRC34-38)
Tensile strength 10.9 >1040N/mm²
Dark Grey bake paint / Surface treatment

Tensioner:

M24 x 3,0 x 20 mm (+/-1 mm) 6H
40Cr (HRC28-32) Phosphate
Wrench 36mm (+/-0,5 mm)
Tensile strength 10

312143 / 312145



LPGRS 08/2016 →

312143 / 312144 / 312145

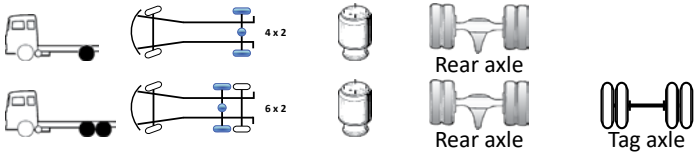

LPGRS 08/2016 →

312146

Spring clamp assy 360 mm +/-5 mm
Type: Universal

Replaces 312143, 312144, 312145

ScR

2096148
2096147
2096146
1859925
1859924
1859923
1744172

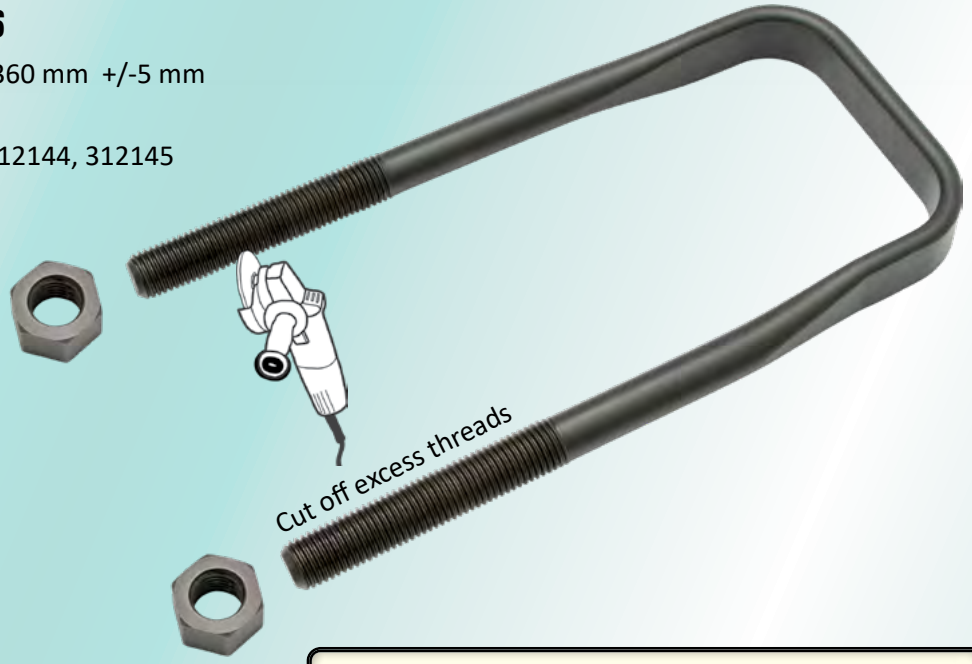

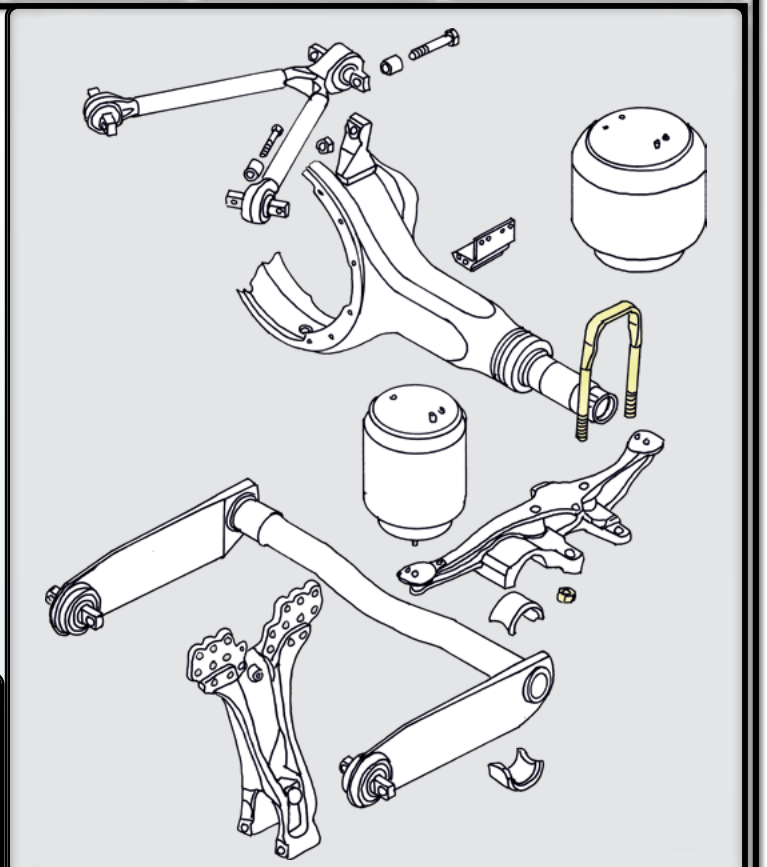

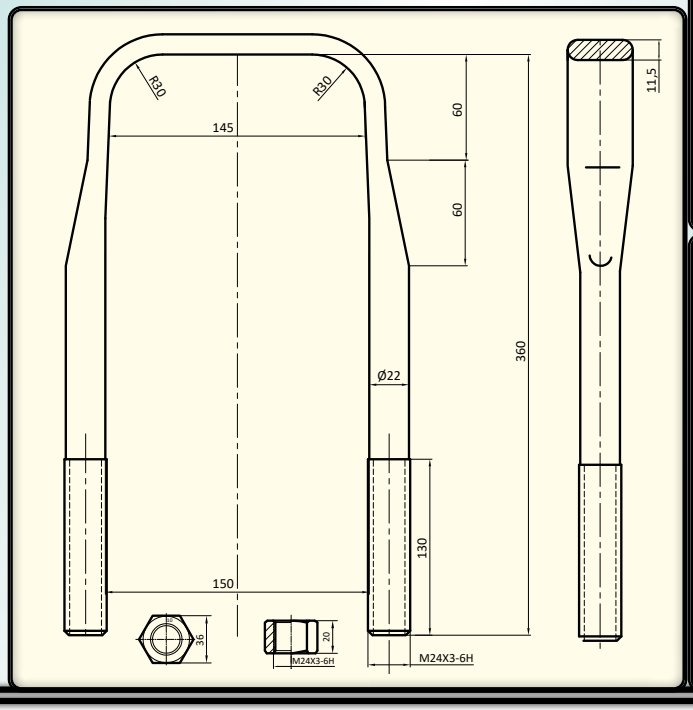

Clamp:
Ø 22 mm
M24 x 3,0 x 130 mm +/-5mm 5-6H
Width: 145/150 mm (+/-1 mm)
40Cr (HRC34-38)
Tensile strength 10.9 >1040N/mm²
Dark Grey bake paint / Surface treatment

Tensioner:
M24 x 3,0 x 20 mm (+/-1 mm) 6H
40Cr (HRC28-32) Phosphate
Wrench 36mm (+/-0,5 mm)
Tensile strength 10

kg 2,76

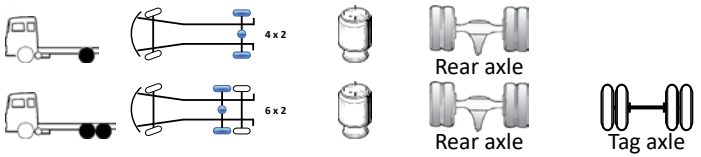

LPGRS 08/2016 →

HD 312149

ScR 2277269

Spring clamp assy 265 mm +/-5 mm

HD 312150

ScR 2277273

Spring clamp assy 285 mm +/-5 mm

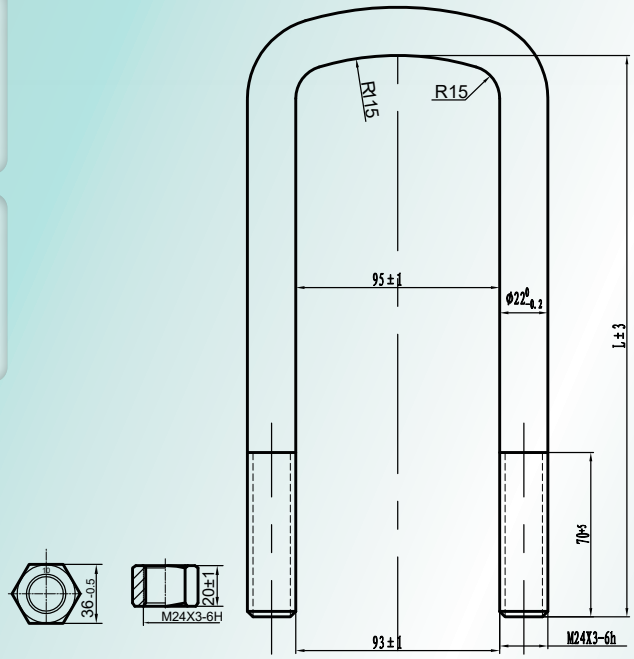



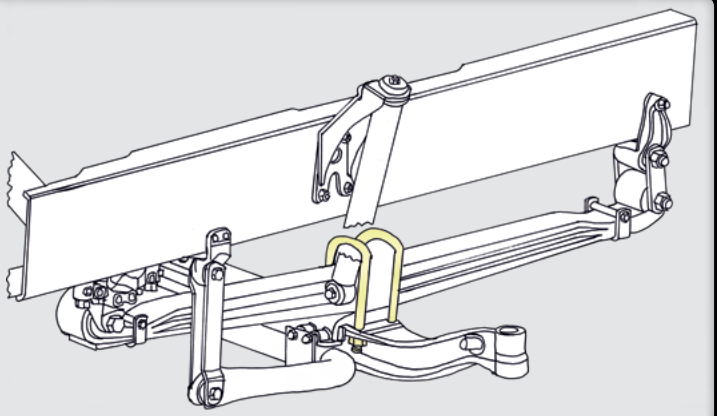

Clamp:

Ø 22 mm
M24 x 3,0 x 70 mm +/-5mm 6H
Width: 93 / 95 mm (+/-1 mm)
40Cr (HRC34-38)
Tensile strength 10.9 >1040N/mm²
Dark Grey bake paint / Surface treatment

Tensioner:

M24 x 3,0 x 20 mm (+/-1 mm) 6H
40Cr (HRC28-32) Phosphate
Wrench 36mm (+/-0,5 mm)
Tensile strength 10

312149



2 nd. Front axle

LPGRS GPR

312150



1 st. & 2 nd. Front axle

LPGRS GPR

312151

Spring clamp assy 285 mm +/-5 mm
Type: Universal

Replaces 312149 and 312150

ScR

2277273
2277269



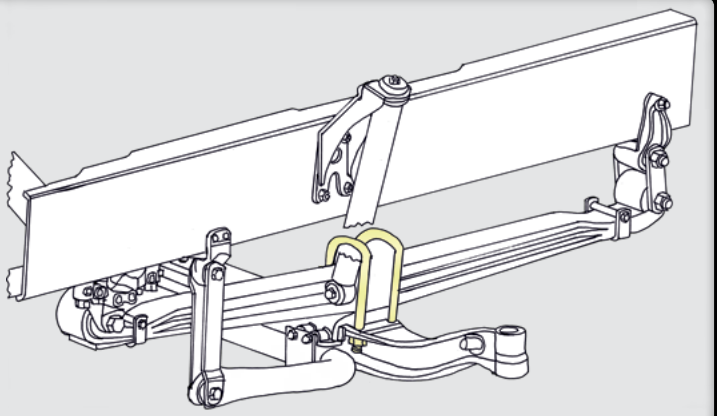

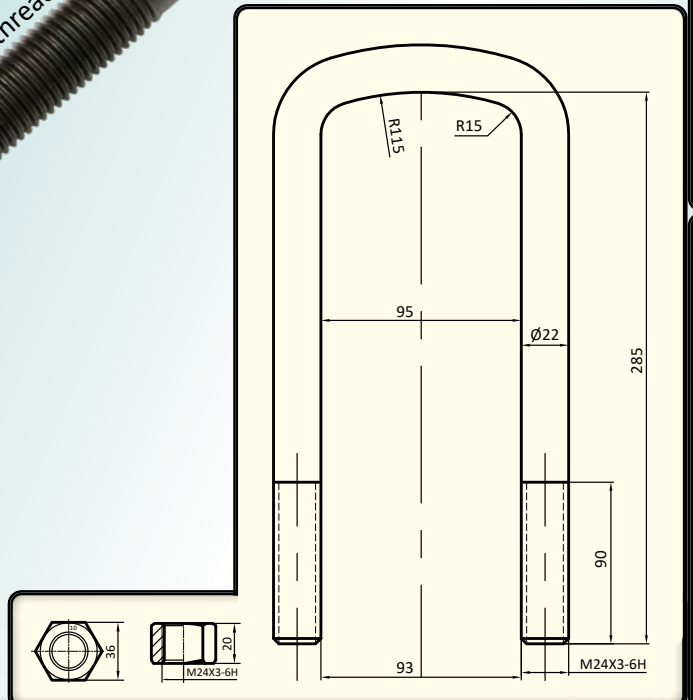

Clamp:
Ø 22 mm
M24 x 3,0 x 130 mm +/-5mm 5-6H
Width: 93 / 95 mm (+/-1 mm)
40Cr (HRC34-38)
Tensile strength 10.9 >1040N/mm²
Dark Grey bake paint / Surface treatment

Tensioner:
M24 x 3,0 x 20 mm (+/-1 mm) 6H
40Cr (HRC28-32) Phosphate
Wrench 36mm (+/-0,5 mm)
Tensile strength 10

2 nd. Front axle

1 st. & 2 nd. Front axle

LPGRS 08/2016 →

GPR 2004 - 2018

kg 2,24

HD 312129	Spring clamp assy 175 mm +/-5 mm	
ScR	2096129	1726128
HD 312130	Spring clamp assy 190 mm +/-5 mm	
ScR	2096130	1726129 1324367
HD 312131	Spring clamp assy 200 mm +/-5 mm	
ScR	2096131	1726130 1384353 1377774 293321
HD 312132	Spring clamp assy 215 mm +/-5 mm	
ScR	2096132	1726131 1331197 276229
HD 312133	Spring clamp assy 225 mm +/-5 mm	
ScR	2064011	1726132 1331198 1308593 293322
HD 312134	Spring clamp assy 240 mm +/-5 mm	
ScR	2096134	1726133 1384444 1377773 326822
HD 312135	Spring clamp assy 255 mm +/-5 mm	
ScR	2096135	1726134 1331200
HD 312136	Spring clamp assy 270 mm +/-5 mm	
ScR	2096136	1726135 1384497
HD 312137	Spring clamp assy 280 mm +/-5 mm	
ScR	2096137	1726136

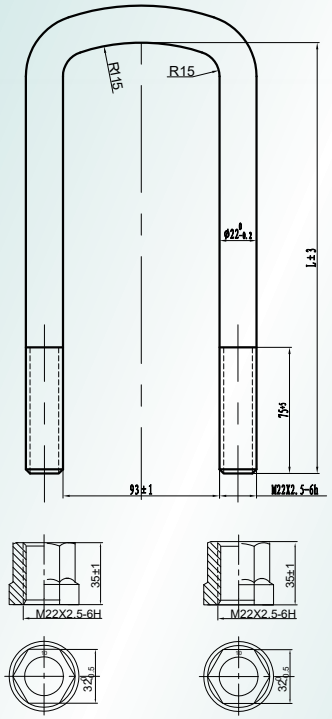

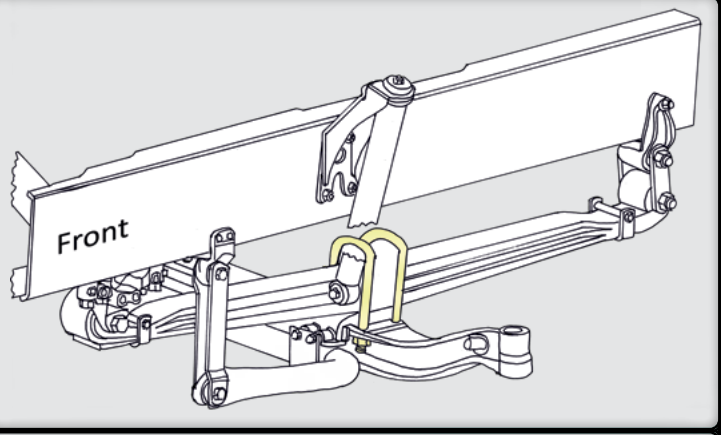

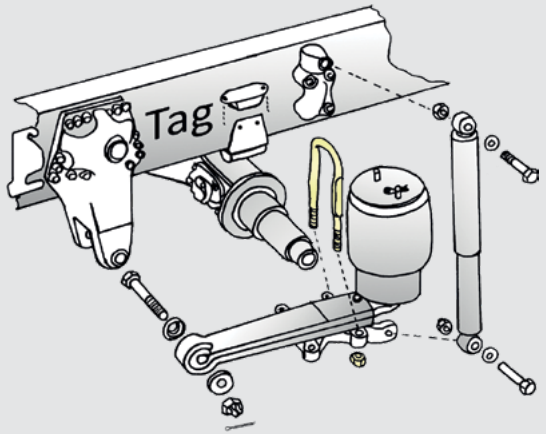

Clamp:

Ø 22 mm
M22 x 2,5 x 75 mm +/-5mm 5-6H
Width: 93 mm (+/-1 mm)
40Cr (HRC34-38)
Tensile strength 10.9 >1040N/mm²
Dark Grey bake paint / Surface treatment

Tensioner:

M22 x 2,5 x 35 mm (+/-1 mm) 5-6H
40Cr (HRC28-32) Phosphate
Wrench 32mm (+/-0,5 mm)
Tensile strength 10



Front axle | Tag axle

312129	LPGRS	GPR		
312130	LPGRS	GPR	94 - 164	
312131	LPGRS	GPR	94 - 164	93 - 143
312132	LPGRS	GPR	94 - 164	93 - 143
312133	LPGRS	GPR	94 - 164	93 - 143
312134	LPGRS	GPR	94 - 164	93 - 143
312135	LPGRS	GPR	94 - 164	
312136	LPGRS	GPR	94 - 164	
312137	LPGRS	GPR	94 - 164	

312138

Spring clamp assy 280 mm +/-5 mm
Type: Universal

Replaces 312129 - 312137

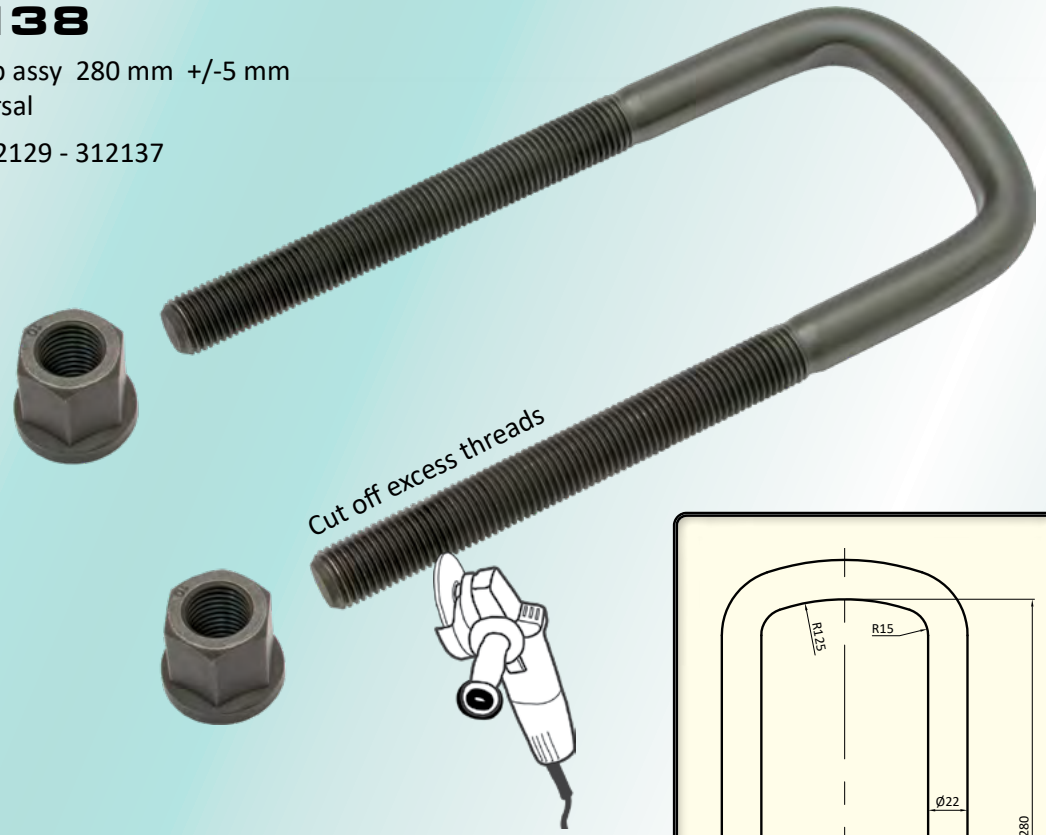

ScR

276229
293322
326822
1308593
1324367
1331197
1331198
1331200
1377773
1377774
1384353
1384444
1384497
1726128
1726129
1726130
1726131
1726132
1726133
1726134
1726135
1726136
2064011
2096129
2096130
2096131
2096132
2096134
2086135
2096136
2086137

Clamp:

Ø 22 mm
M22 x 2,5 x 180 mm +/-5mm 5-6H
Width: 93 mm (+/-1 mm)
40Cr (HRC34-38)
Tensile strength 10.9 >1040N/mm²
Dark Grey bake paint / Surface treatment

Tensioner:

M22 x 2,5 x 35 mm (+/-1 mm) 5-6H
40Cr (HRC28-32) Phosphate
Wrench 32mm (+/-0,5 mm)
Tensile strength 10

kg 2,11

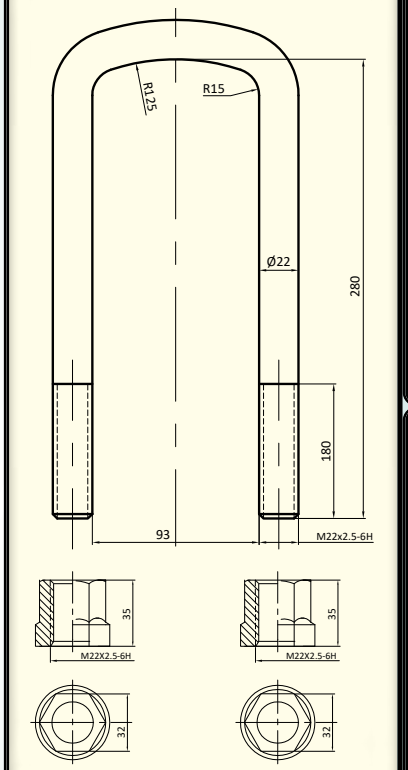

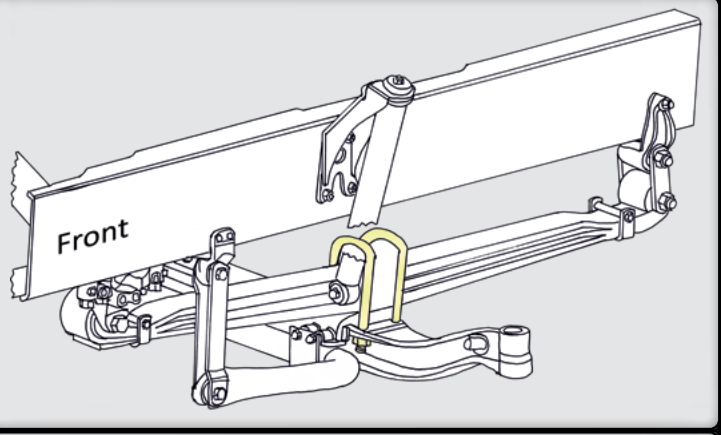

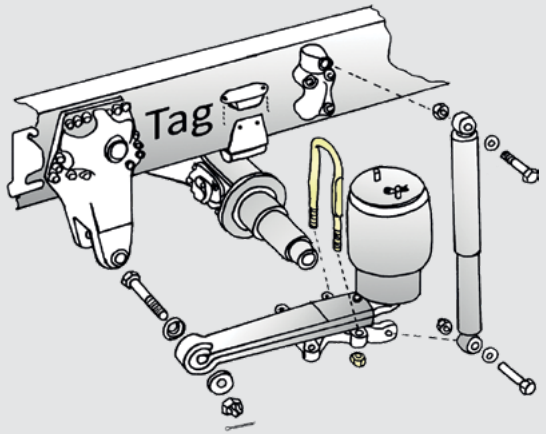

Front axle | Tag axle

312129	LPGRS	GPR		
312130	LPGRS	GPR	94 - 164	
312131	LPGRS	GPR	94 - 164	93 - 143
312132	LPGRS	GPR	94 - 164	93 - 143
312133	LPGRS	GPR	94 - 164	93 - 143
312134	LPGRS	GPR	94 - 164	93 - 143
312135	LPGRS	GPR	94 - 164	
312136	LPGRS	GPR	94 - 164	
312137	LPGRS	GPR	94 - 164	

HD 312160

ScR 2096142 1739274 1377702 1114862

Spring clamp assy 295 mm +/-5 mm

HD 312161

ScR 2096140 1739272 1377700 365455

Spring clamp assy 315 mm +/-5 mm

HD 312163

ScR 2096141

Spring clamp assy 325 mm +/-5 mm

HD 312164

ScR 2096149

Spring clamp assy 395 mm +/-5 mm

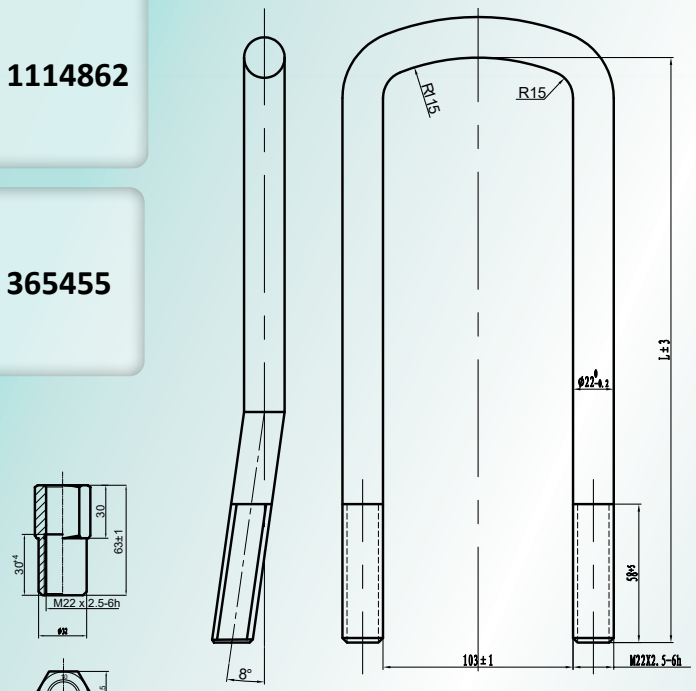



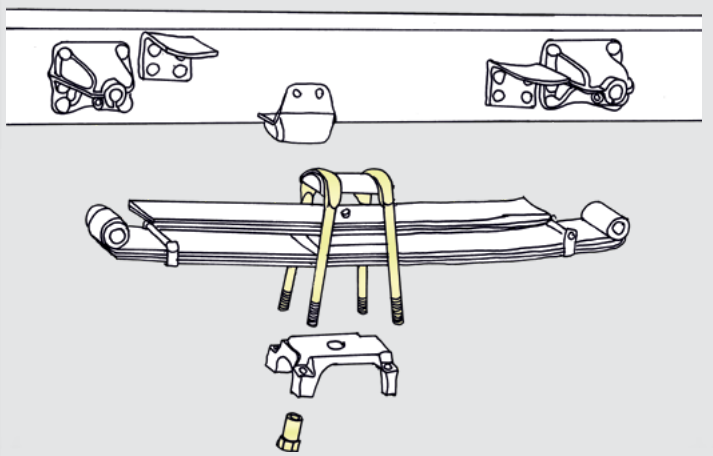

Clamp:

Ø 22 mm
M22 x 2,5 x 58 mm +/-5mm 5-6H
Width: 103 mm (+/-1 mm)
40Cr (HRC34-38)
Tensile strength 10.9 >1040N/mm²
Dark Grey bake paint / Surface treatment

Tensioner:

M22 x 2,5 x 63 mm (+/-1 mm) 5-6H
40Cr (HRC28-32) Phosphate
Wrench 32mm (+/-0,5 mm)
Tensile strength 10

Rear axle

312160	LPGRS	GPR	94 - 164	93 - 143
312161	LPGRS	GPR	94 - 164	93 - 143
312163	LPGRS	GPR	94 - 164	93 - 143
312164	LPGRS	GPR		

HD 312162
ScR 2096155

Spring clamp assy 320 mm +/-5 mm

HD 312165
ScR 2096150

Spring clamp assy 400 mm +/-5 mm

HD 312166
ScR 2096158

Spring clamp assy 420 mm +/-5 mm

HD 312167
ScR 2096157

Spring clamp assy 430 mm +/-5 mm

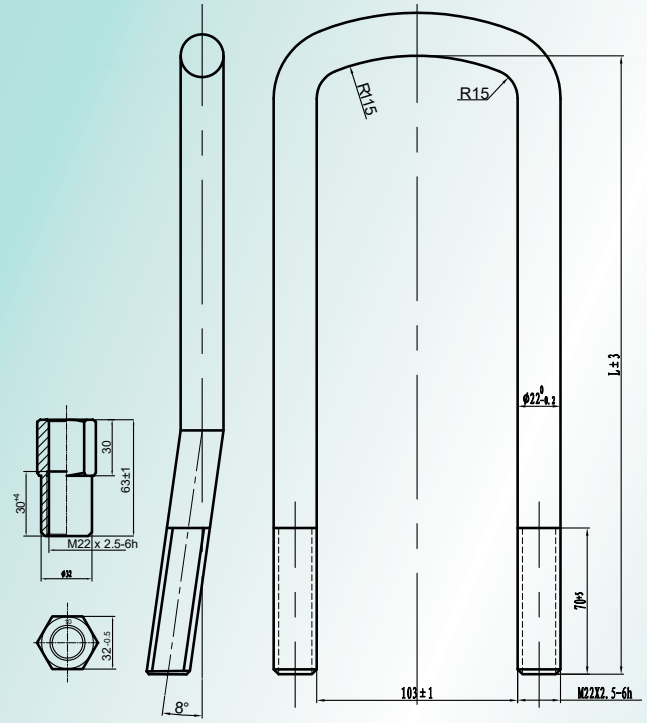

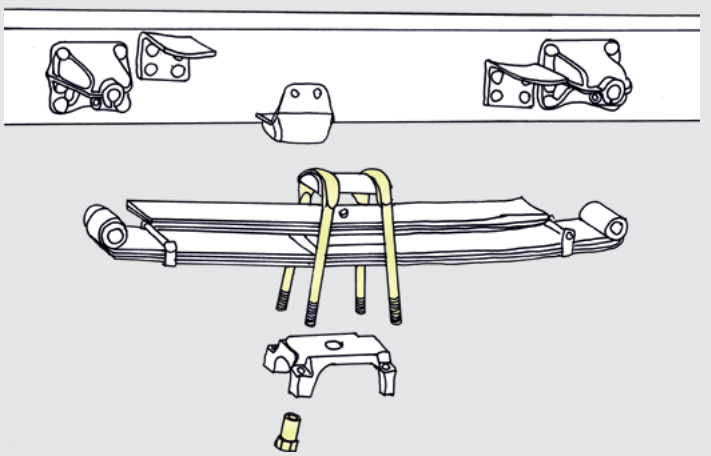



Clamp:
Ø 22 mm
M22 x 2,5 x 70 mm +/-5mm 5-6H
Width: 103 mm (+/-1 mm)
40Cr (HRC34-38)
Tensile strength 10.9 >1040N/mm²
Dark Grey bake paint / Surface treatment

Tensioner:
M22 x 2,5 x 63 mm (+/-1 mm) 5-6H
40Cr (HRC28-32) Phosphate
Wrench 32mm (+/-0,5 mm)
Tensile strength 10

Rear axle

312162	LPGRS	GPR	4x2	4x4	6x2z	8x2z
312165	LPGRS	GPR	4x2	4x4		
312166	LPGRS	GPR	4x2	4x4		
312167	LPGRS	GPR	4x2	4x4		

312190

Spring clamp tensioner

ScR

1388823
265768

M22 x 2,5 x 65 mm

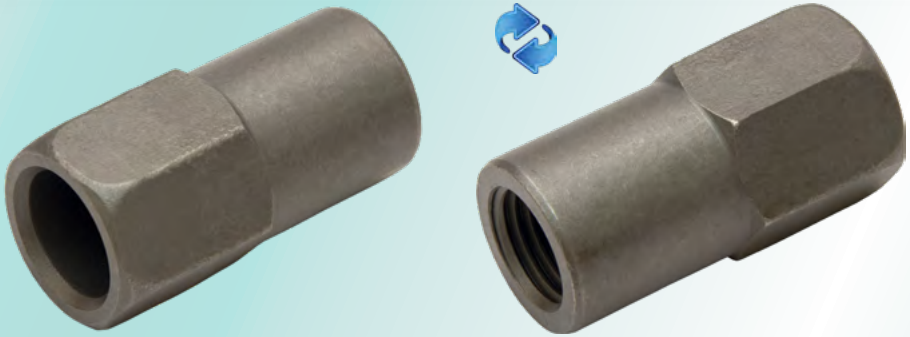

kg 0,22

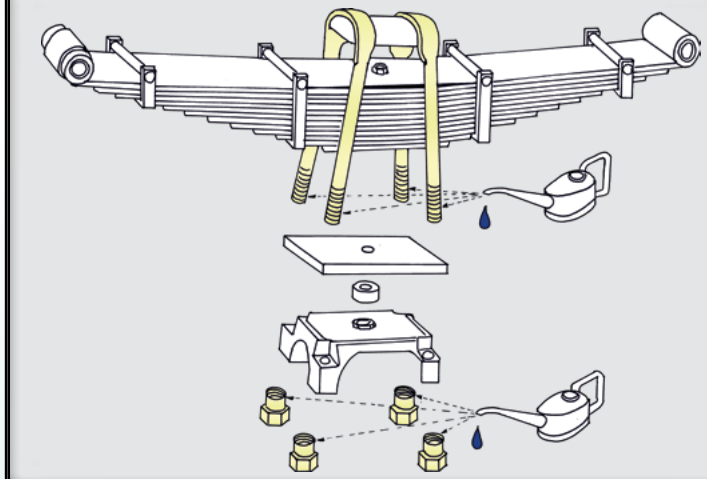

312194

Spring clamp plate

ScR **1386107**



Ø 32 x 56 x 4 mm

kg 0,05

LPGRS	08/2016 →
GPR	04/2004 - 2018
94 - 164	06/1995 - 12/2004
93 - 143	1987 - 1996

312191

Spring clamp tensioner

M22 x 2,5 x 33 mm

ScR **1390243**



kg 0,16

312192

Spring clamp tensioner

M24 x 3,0 x 19 mm

ScR

1371836
961997



kg 0,16

312193

Spring clamp tensioner

M30 x 3,5 x 24 mm

ScR **1386106**



kg 0,23

312237

Link kit

Suitable bushing:
HD 312302
ScR 2196775



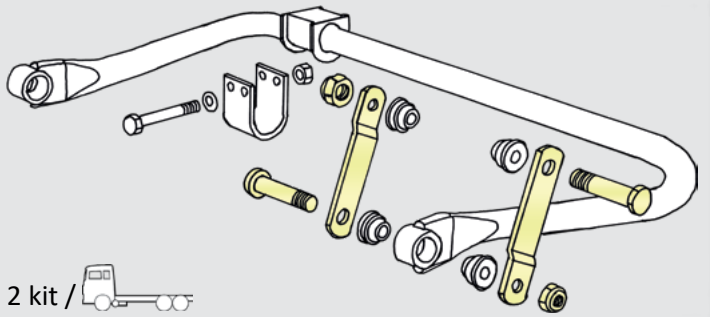

2 kit /

ScR

1485607 x 2
1397309 x 2
1387576 x 2
803006 x 2

Dimensions:
304 x 8 mm
Ø 16 mm

Material:
Steel

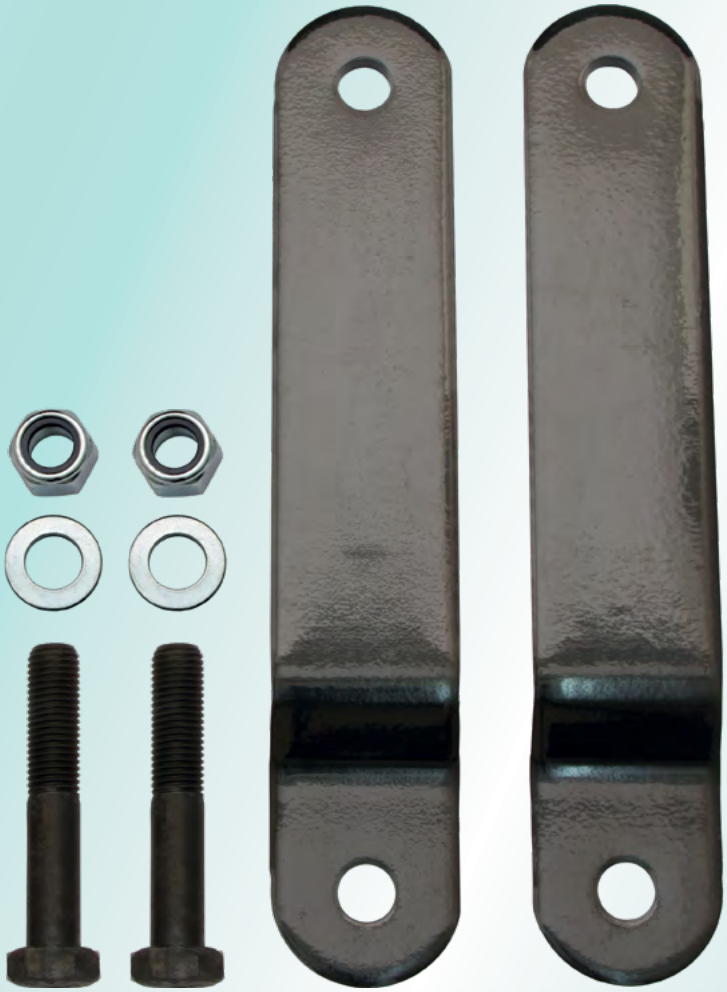

kg 2,35

GPR	04/2004 - 2018	Ø 50 x 7 Ø 65 x 8,5
GPR	04/2004 - 2018	Ø 65 x 8,5
GPR	04/2004 - 2018	Ø 65 x 8,5
6x2/4	8x2/4	Without modular hole pattern.
94 - 164	1994 - 2008	Ø 50 x 7 Ø 65 x 8,5

1292429→ 4501901→ 9083917→ 3545542→

312238

Link kit

ScR

1485608	x 2
1397309	x 2
1387576	x 2
803006	x 2

Dimensions:
424 x 8 mm
Ø 16 mm

Material: Steel

kg 2,72

Suitable bushing → LPGRS
HD **312301** 4 x
ScR 2280638



Suitable bushing → GPR
HD **312302** 8 x
ScR 2196775







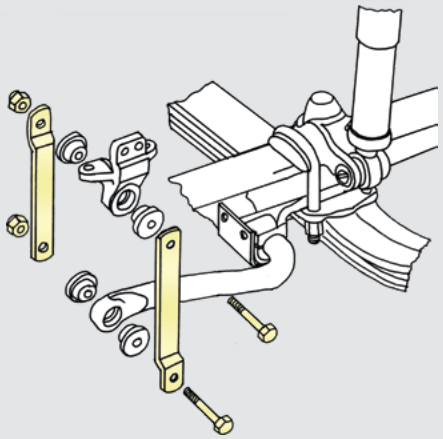

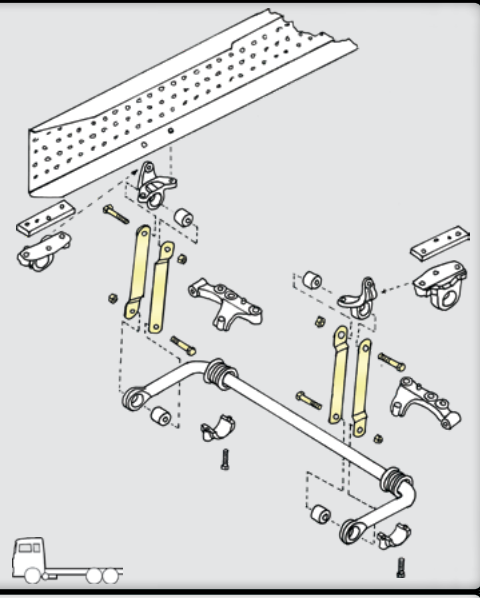

2/4 kit →

LPGRS	08/2016→		
GPR	04/2004 - 2018	Ø 40, 50, 65 mm	
GPR	04/2004 - 2018	Ø 50 mm	
94 - 164	10/2003 - 2008	Ø 40, 50, 65 mm	

1292429→ 4501901→ 9083917→ 3545542→

312239

Link kit

ScR

1485609	x 2
1397309	x 2
1387576	x 2
803006	x 2

Dimensions:
424 x 8 mm
Ø 16 mm

Material: Steel





kg 2,98

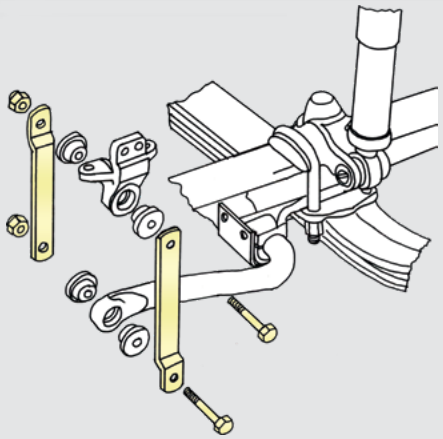

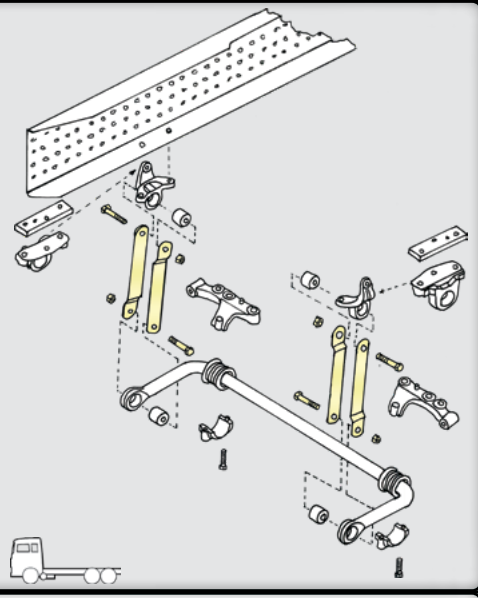

2/4 kit →

LPGRS	08/2016→		
LPGRS	08/2016→		
GPR	04/2004-2018		Ø 40, 50 mm
GPR	04/2004-2018		Ø 65x8,5 mm
94-164	1994 - 2008		Ø 40, 50 mm
94-164	1994 - 2008		Ø 65x8,5 mm

Suitable bushing → LPGRS / GPR

HD **312301**
ScR 2280638

4 x



Suitable bushing → GPR / 94 - 164

HD **312302**
ScR 2196775

8 x



312240

Link kit

Suitable bushing:
HD 312300
ScR 2156626



ScR

1377740	x 2
810003	x 2
807358	x 2
807331	x 2

Dimensions:
310 x 10 mm
Ø 20 mm

Material: Steel

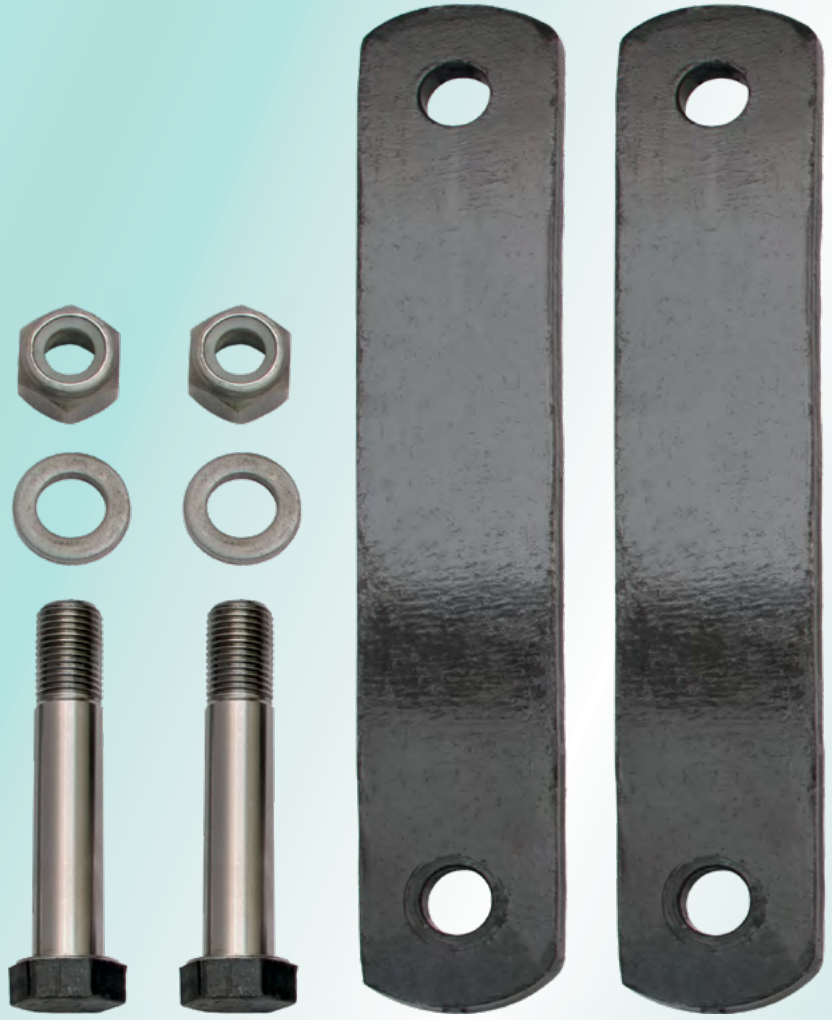

kg 3,41

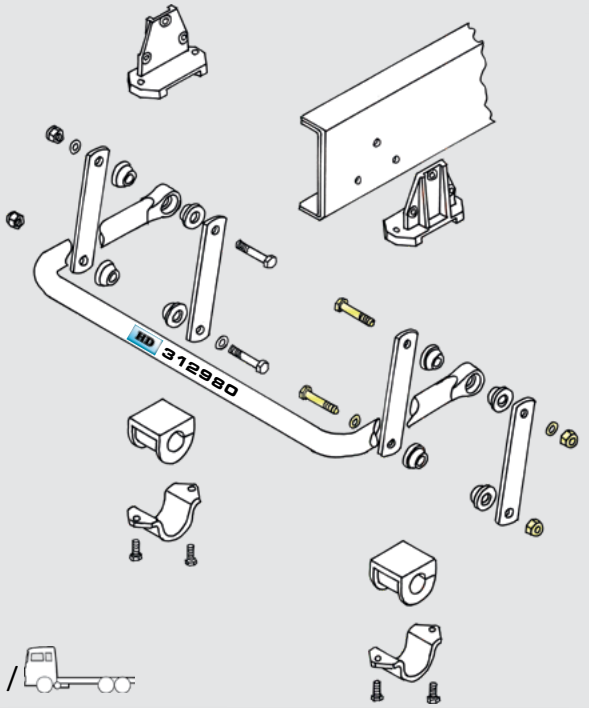

2 kit /

GPRS		08/2016→	
6 x 2	8 x 2		
GPR		04/2004 - 2017	
6 x 2	6x2/2	8 x 2	
94 - 164		06/1995 - 12/2004	
6 x 2	8 x 2	AD1300	
93 - 143		1987 - 1996	

312242

Link kit

Suitable bushing:
HD 312300
ScR 2156626



ScR

1384762	x 2
810003	x 2
807358	x 2
807331	x 2

Dimensions:
387 x 10 mm
Ø 20 mm

Material: Steel



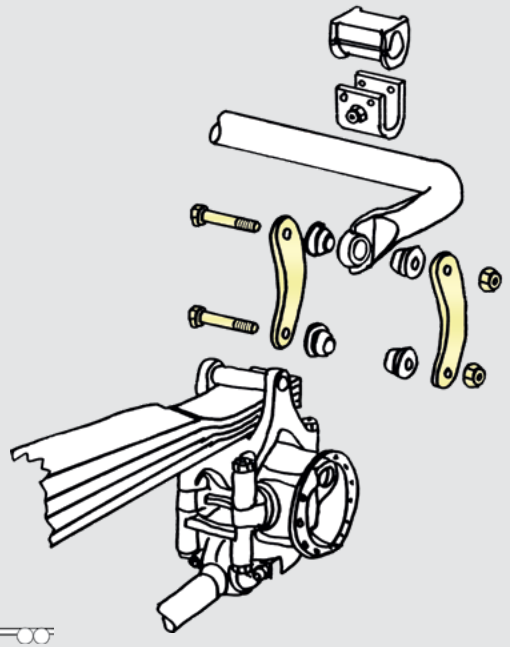

2 kit /

BT201 BT300 BT301

LPGRS 08/2016→
GPR 04/2004 - 2018

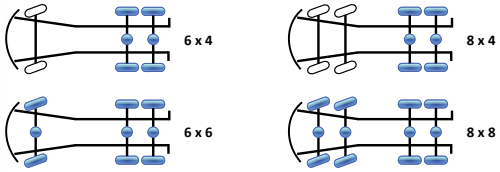

94 - 164 1996 - 2008

BT200 I/B BT201 I/B BT300 I/B

kg 4,3

312243

Link kit

ScR

1933627	x 2
810003	x 2
807358	x 2
807331	x 2

Dimensions:
334 x 10 mm
Ø 20 mm

Material: Steel



kg 3,97

LPGRS

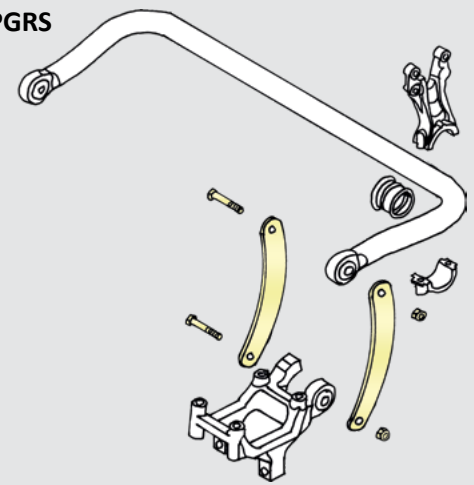

GPR

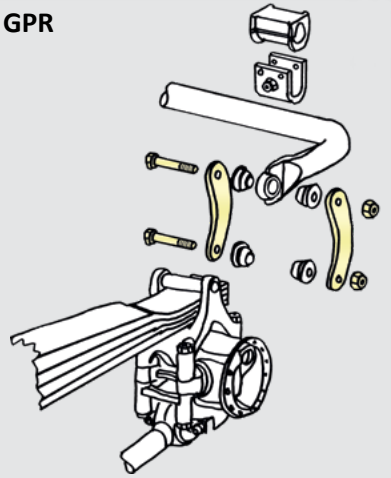

2 kit /

LPGRS	08/2016→
GPR	04/2004 - 2018

Bogie BT200, BT201, BT300, BT301

Suitable bushing → LPGRS

HD **312301**
ScR 2280638

4 x



Suitable bushing → GPR

HD **312302**
ScR 2196775

8 x



312244

Link kit

ScR

1805092	x 2
1397309	x 2
1387576	x 2
803006	x 2

Suitable bushing → LPGRS

HD **312301** 4 x

ScR 2280638



Suitable bushing → GPR

HD **312302** 8 x

ScR 2196775



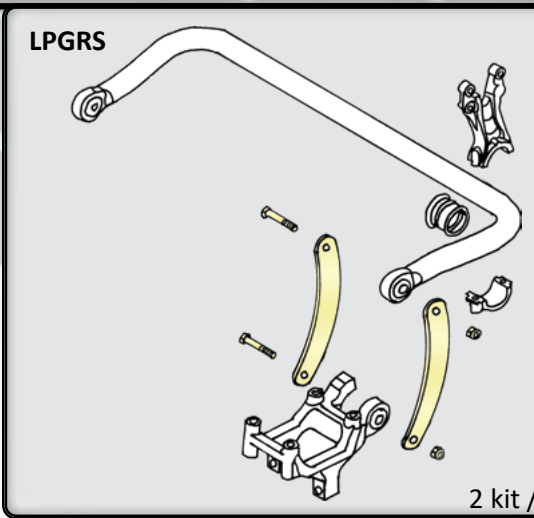

Dimensions:
252 x 8 mm
Ø 16 mm

Material: Steel



kg 1,98

Ø 50 mm

LPGRS 08/2016→

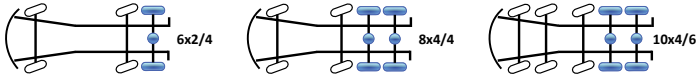

With modular hole pattern

GPR 04/2004 - 2018

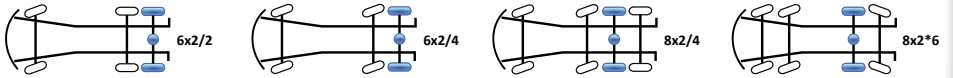

ARA820 S - order

GPR 04/2004 - 2018

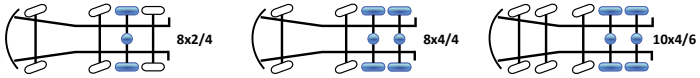

12x4*8

312245

Link kit

ScR

2199635	x 2
1921031	x 2
1387576	x 2
803006	x 2

Dimensions:
398 x 10 mm
Ø 20 mm

Material: Steel



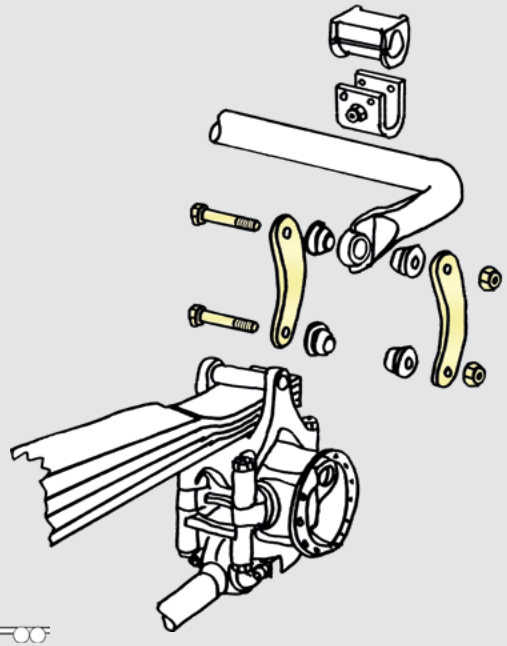

2 kit /

LPGRS 08/2016→
GPR 04/2004 - 2018

Bogie BT301B, BT400S

Suitable bushing → LPGRS
HD **312301**
ScR 2280638
4 x



Suitable bushing → GPR
HD **312302**
ScR 2196775
8 x



kg 4,01

312246

Link kit

Suitable bushing → LPGRS
HD 312301
ScR 2280638
4 x



ScR

1485610	x 2
1921031	x 2
1387576	x 2
803006	x 2

Dimensions:
424 x 8 mm
Ø 16 mm

Material: Steel

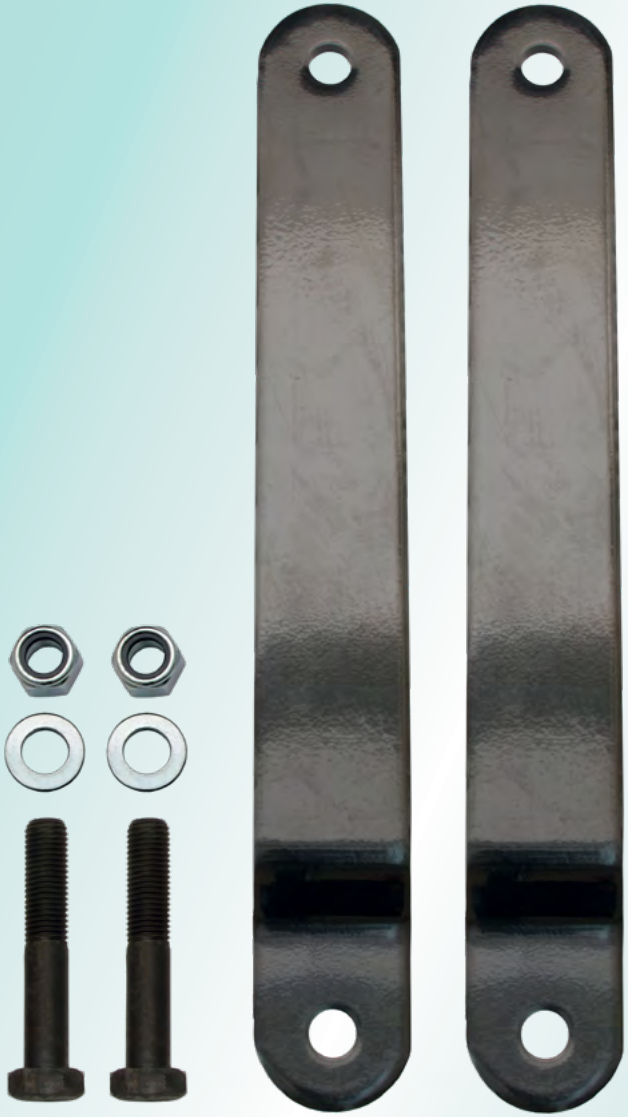

kg 3,11

LPGRS

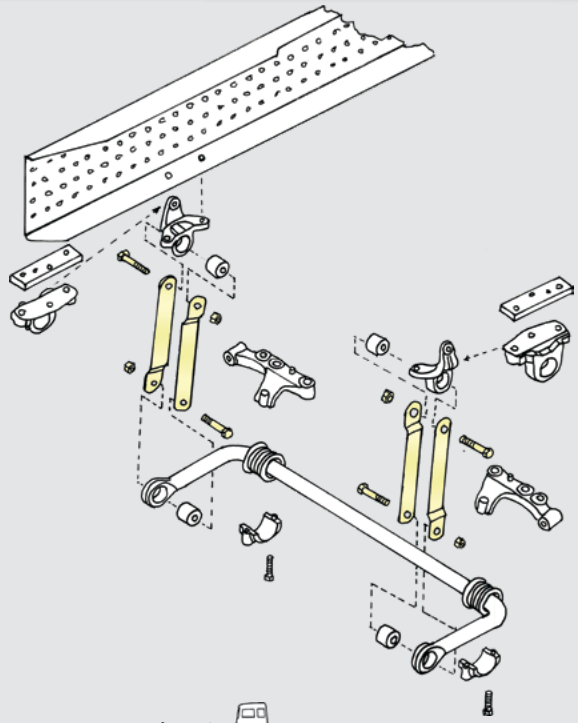

2 kit →

GPR
94 - 164

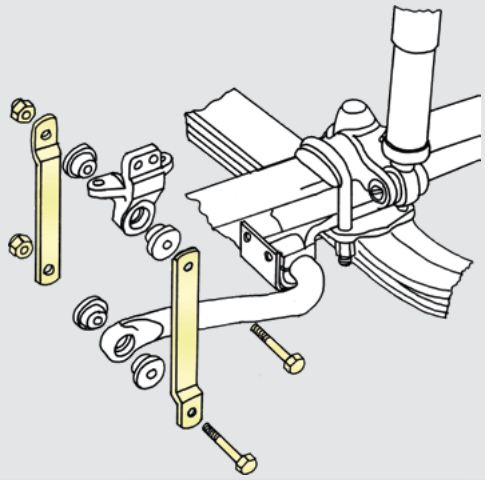

	LPGRS		08/2016→
	GPR		04/2004 - 2018

312300

Bushing

ScR

2156626
1477867
1429110
310808

ø 20,7 mm
ø 57,7 mm
h 30,0 mm

Steel / NBR



kg 0,1

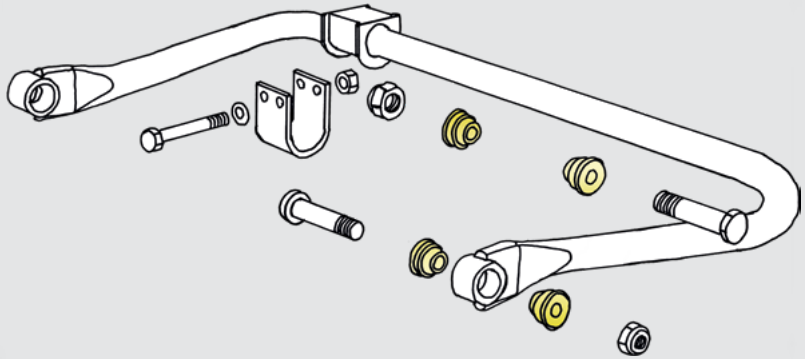

LPGRS	08/2016 →
GPR	04/2004 - 2018
94 - 164	06/1995 - 12/2004
93 - 143	1987 - 1996

94, 114, 124	10/1997 - 11/2006
93, 113	

312302

Bushing

ScR

2196775
1516496

ø 16,3 mm
ø 46,5 mm
h 24,0 mm

Steel / NBR

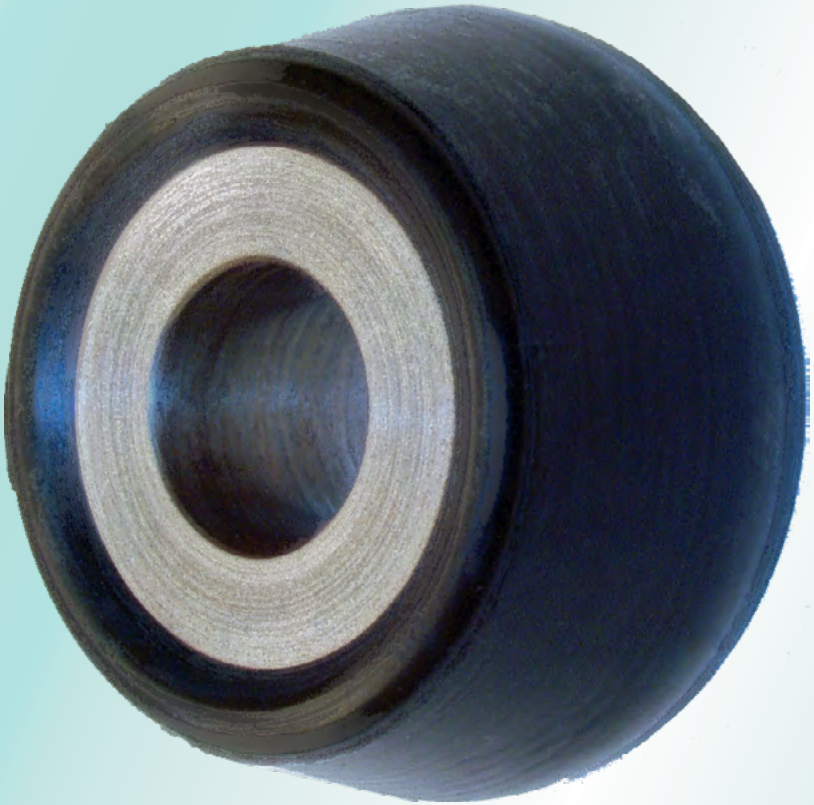

kg 0,1

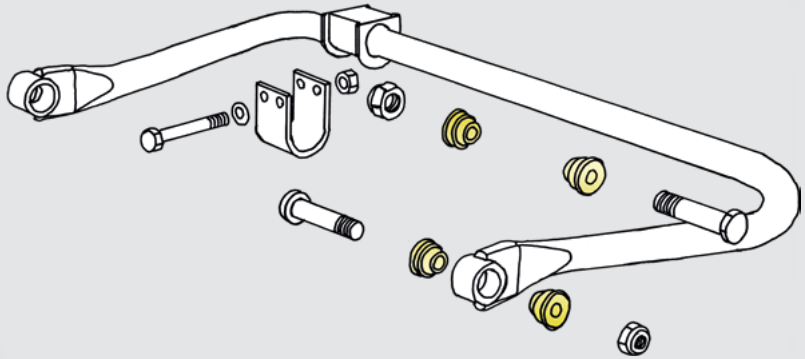

LPGRS	08/2016 →
GPR	04/2004 - 2018
94 - 164	06/1995 - 12/2004

KN	11/2005→
94, 114, 124	10/1997 - 11/2006

312301

Bushing

ScR 2280638

ø 16,0 mm
ø 48,3 mm
Length 45 mm

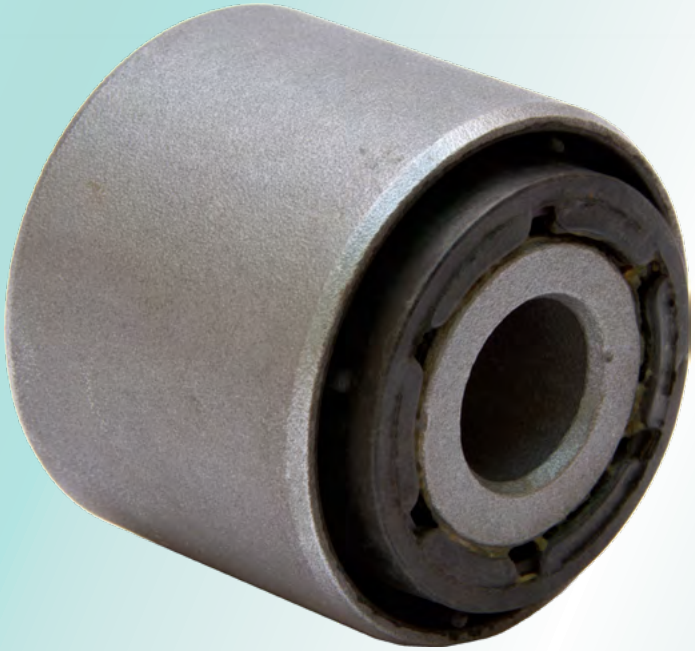

kg 0,36

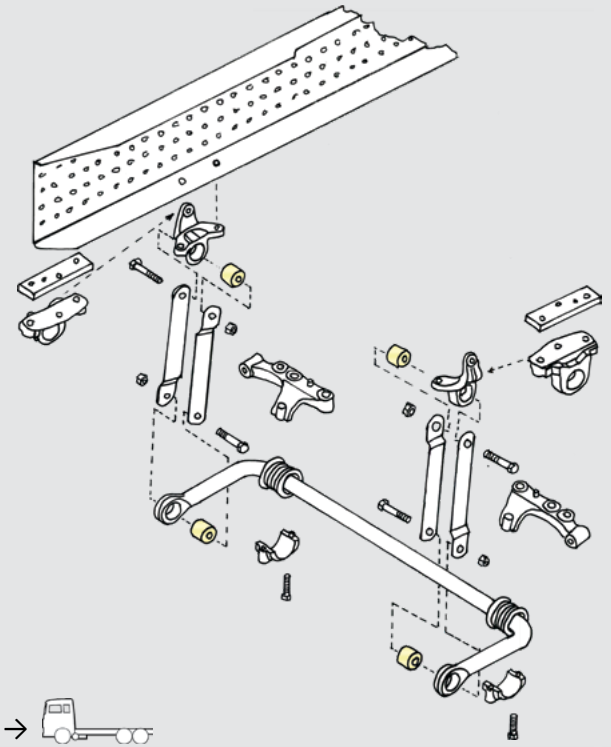

4/8 →

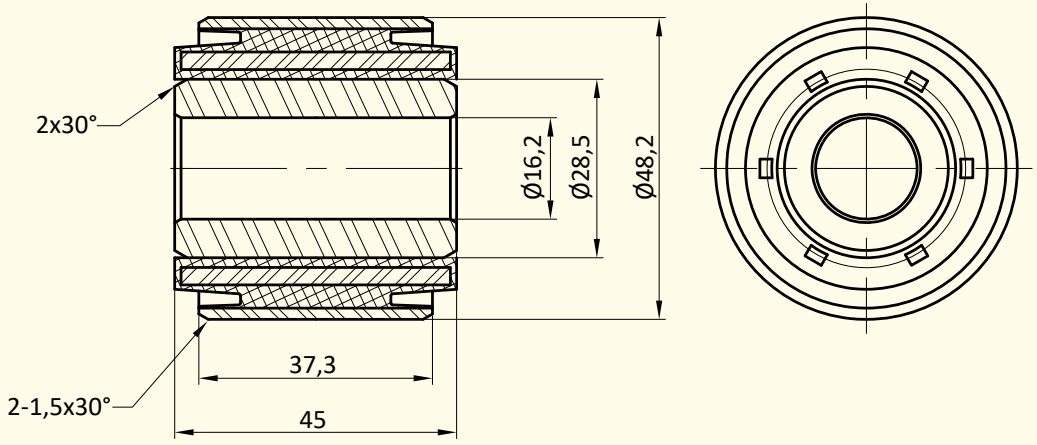

LPGRS	08/2016→		
6x2/2	6x2/4	8x2/4	
LPGRS	08/2016→		
LPGRS	08/2016→		
GPR	04/2004 - 2018		
BT301B	6 x 4	8 x 4	

312304

Bushing

ScR 213604

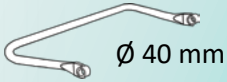

Ø 40 mm



Material:
NR Natural Rubber and
Synthetic rubber blend

Hardness:
A 60-65 Shore

-40 °C → +80°C

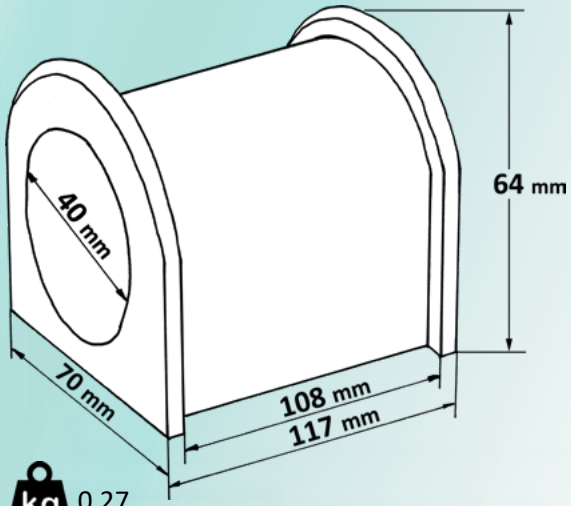

kg 0,27

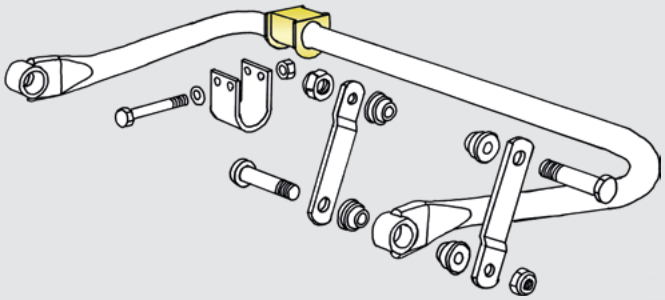

GPR	04/2004 - 2018
94 - 164	1995 - 12/2004

312305

Bushing

ScR 228483

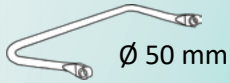

Ø 50 mm



Material:
NR Natural Rubber and
Synthetic rubber blend

Hardness:
A 60-65 Shore

-40 °C → +80°C

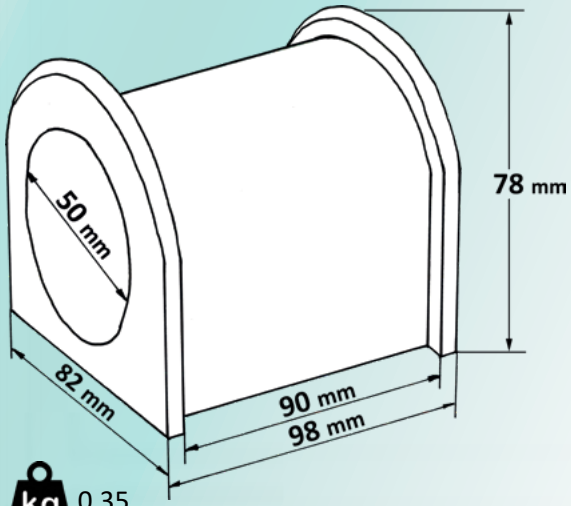

kg 0,35

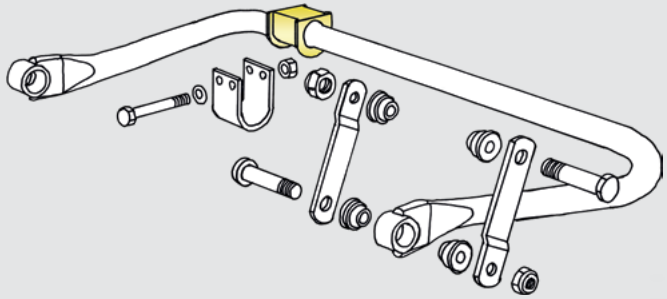

LPGRS	08/2016 →	
		4x2, 4x4
GPR	04/2004 - 2018	
94 - 164	1995 - 12/2004	

312306

Bushing

ScR **1344190**

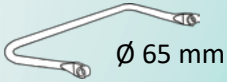

Ø 65 mm



Material:
NR Natural Rubber and
Synthetic rubber blend

Hardness:
A 60-65 Shore

-40 °C → +80°C

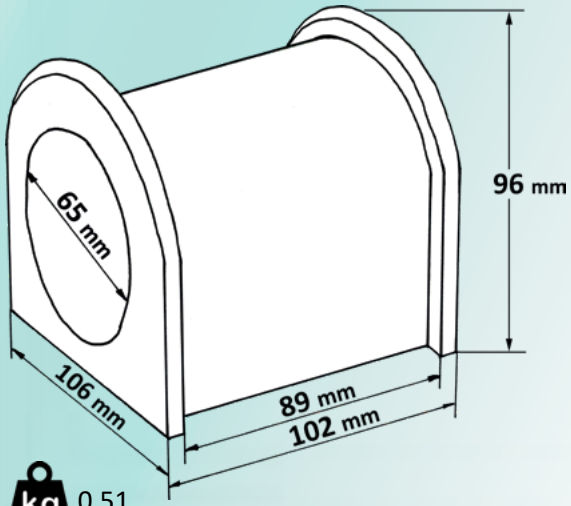

kg 0,51

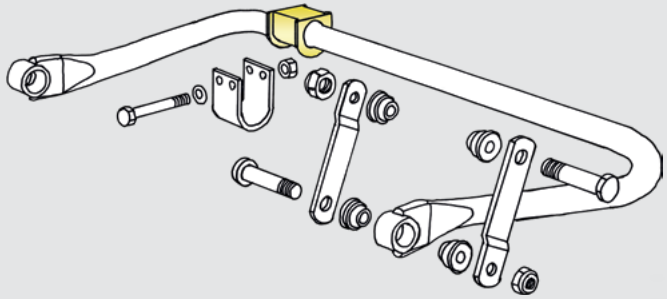

LPGRS	08/2016→	6x4, 8x4, 6x6
GPR	04/2004 - 2018	

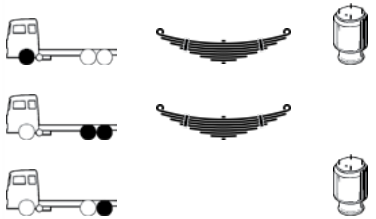

94 - 164	1995 - 12/2004	

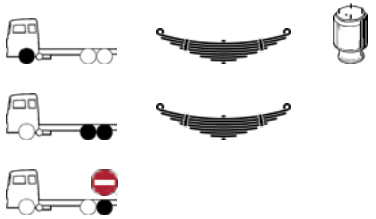

312312

Bushing

ScR

1919010
469081

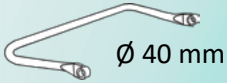

Ø 40 mm



Material:
NR Natural Rubber and
Synthetic rubber blend

Hardness:
A 70 Shore

-40 °C → +80°C

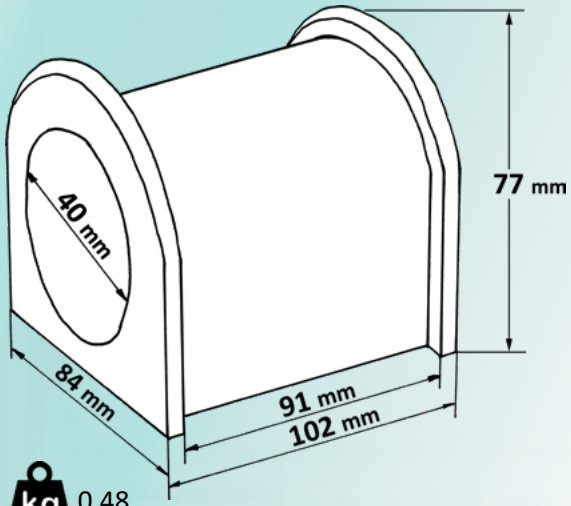

kg 0,48

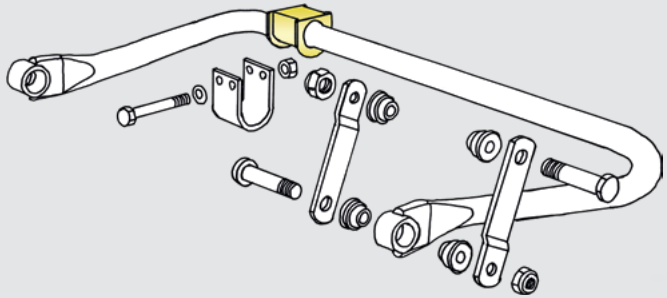

KN 11/2005→

AMA 780

94, 114, 124 10/1997 - 11/2006

AMA

UA - Articulated city bus:

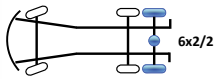

UB - City bus:

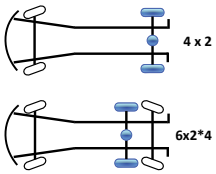

312313

Bushing

ScR

1919024
489648

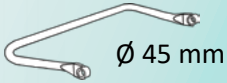



Material:
NR Natural Rubber and
Synthetic rubber blend

Hardness:
A 60-65 Shore

-40 °C → +80°C

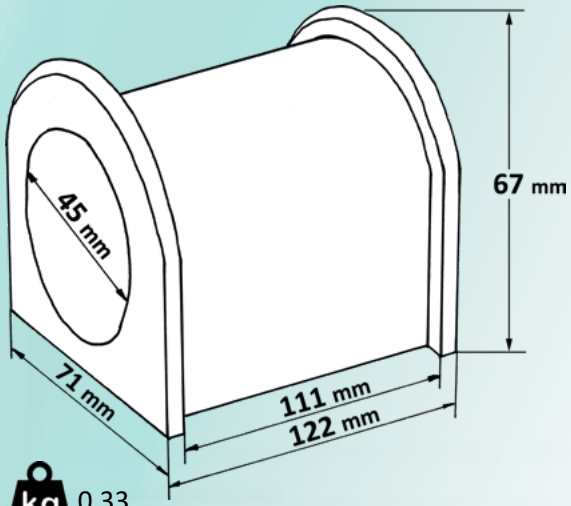

kg 0,33

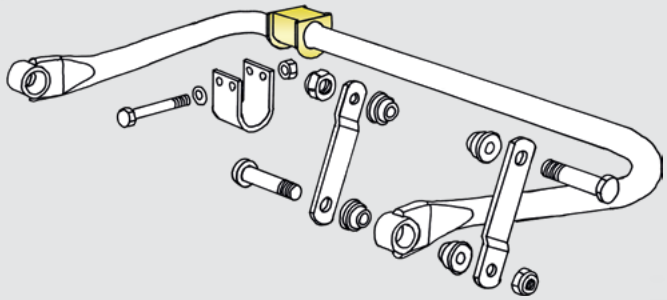

KN	11/2005→	
	ADA 1250	
	ASA 1150	
	ARA 860/861	Steered tag axle

94, 114, 124	10/1997 - 11/2006	
	ADA 1350	*UA / UB
	ASA 1300,	ASA 100X
	ARA 860	Steered tag axle

* UA - Articulated city bus:

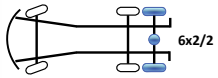

* UB - City bus:



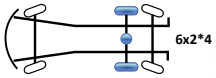

312314

Bushing half pair

ScR **1904248** x 2
488278 x 2

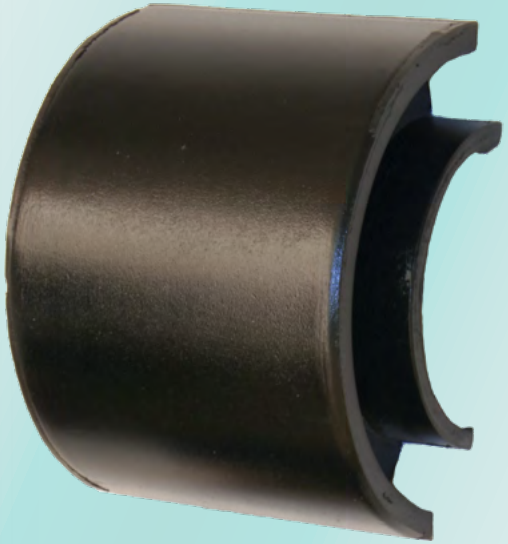

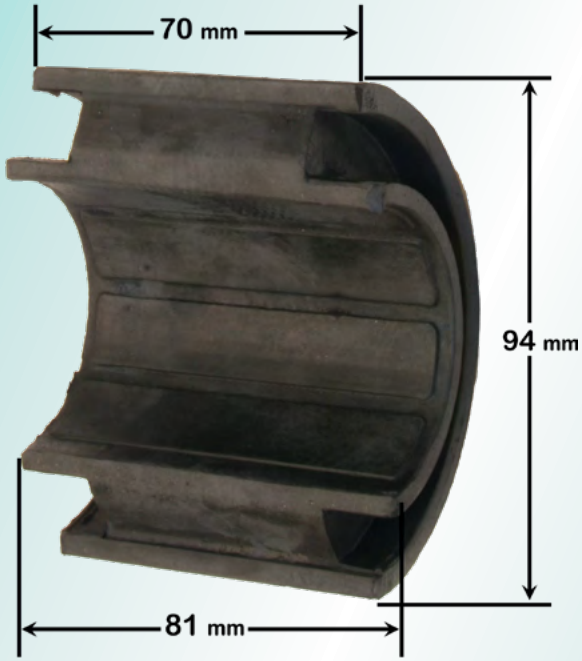

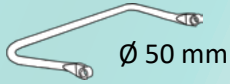

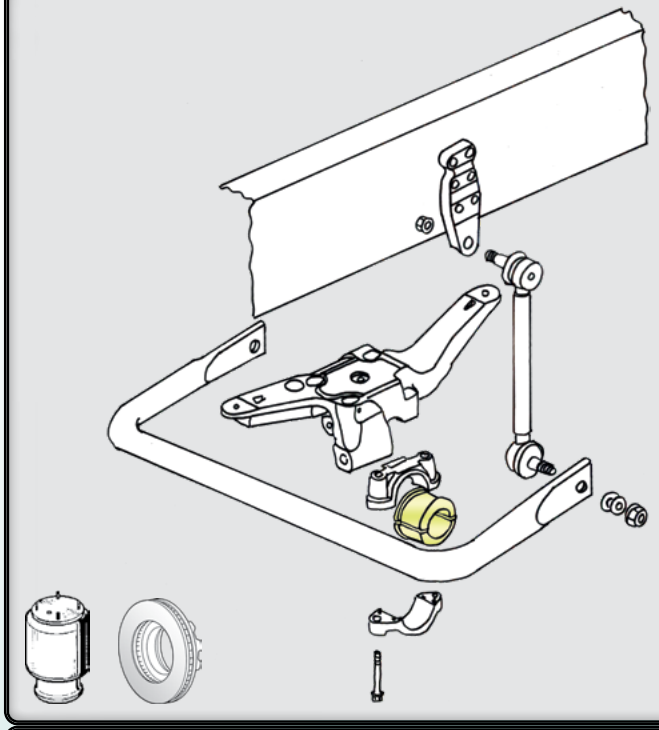

Material:
Steel
NR Natural Rubber and
Synthetic rubber blend

Hardness:
A 60-65 Shore

-40 °C → +80°C

kg 1,05

U = Urban, short distance, normal comfort
I = Intercity, short to long distance, normal comfort
EB = Coach, long distance, high comfort, independent front suspension

KN — 11/2005→

AMI 700 Independent suspension

ADA 1300, ADA 1501
4 x 2, 6 x 2, 6 x 2/2, 6x2*4

94, 114, 124 — 10/1997 - 11/2006

AMI 700 Independent suspension

ADA 1300D U/I, ADA1300D EB
4 x 2, 6 x 2, 6x2*4

312318

Clamp

ScR

1377738
295752

Material: Steel



kg 1,72

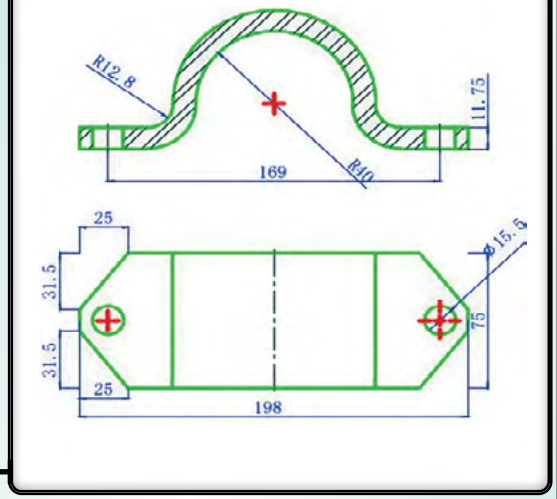

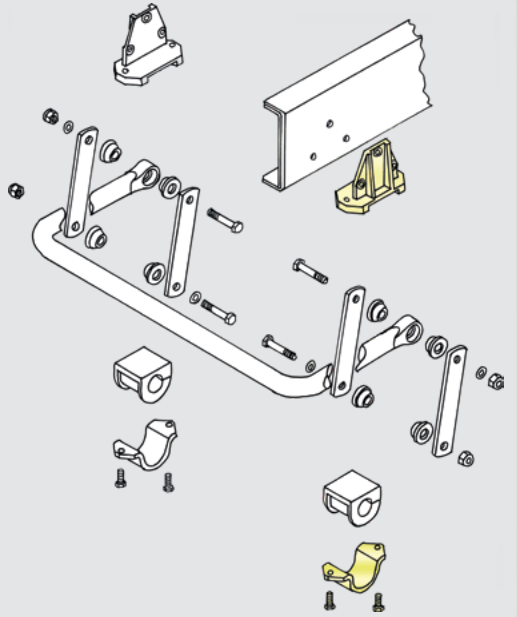

312321

Bracket kit

ScR

1377737 x 1
1377738 x 1

Material: Steel





HD 312318

kg 5,9

LPGRS	08/2016→	6x2, 8x2, 6x4, 8x4, 6x6
GPR	04/2004 - 2018	6x2, 6x2/2, 8x2
94 - 164	06/1995 - 12/2004	6x2, 8x2, AD1300
93 - 143	1987 - 1996	

312325

Torsion bar

ScR

1377733
303049

Material: Spring steel







kg 26

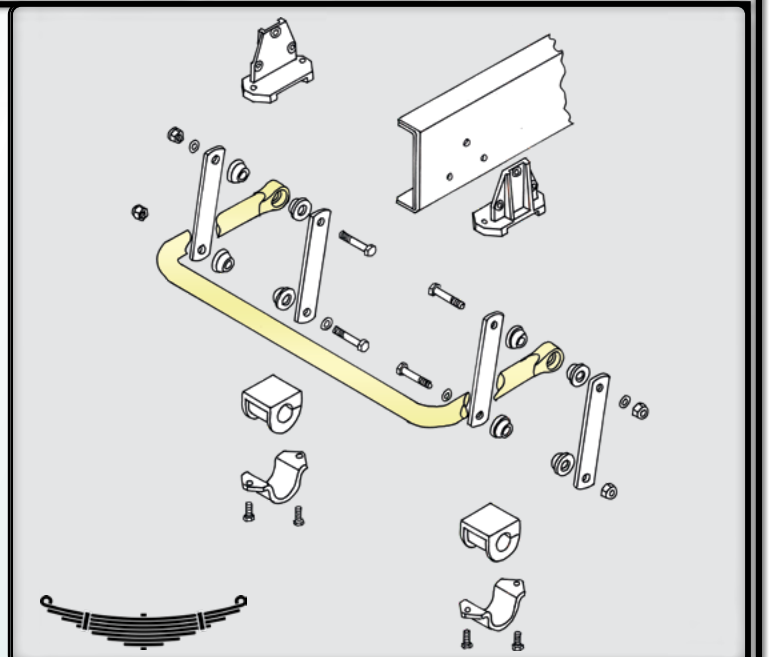

LPGRS — 08/2016→

6 x 2 | 8 x 2 | 4 x 2 | 4 x 4

GPR — 04/2004 - 2018

6 x 2 | 6x2/2 | 8 x 2

94 - 164 — 06/1995 - 12/2004

6 x 2 | 8 x 2 | AD1300

93 - 143 — 1987 - 1996

312320

Installation special kit → Torsion bar

ScR

810003	x 2
807358	x 2
807331	x 2

2/4 kit →



21 x 37 x 6 mm

M20 x 2,5 mm

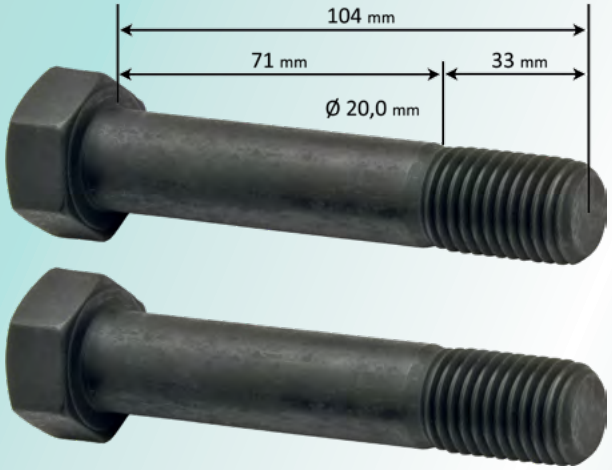

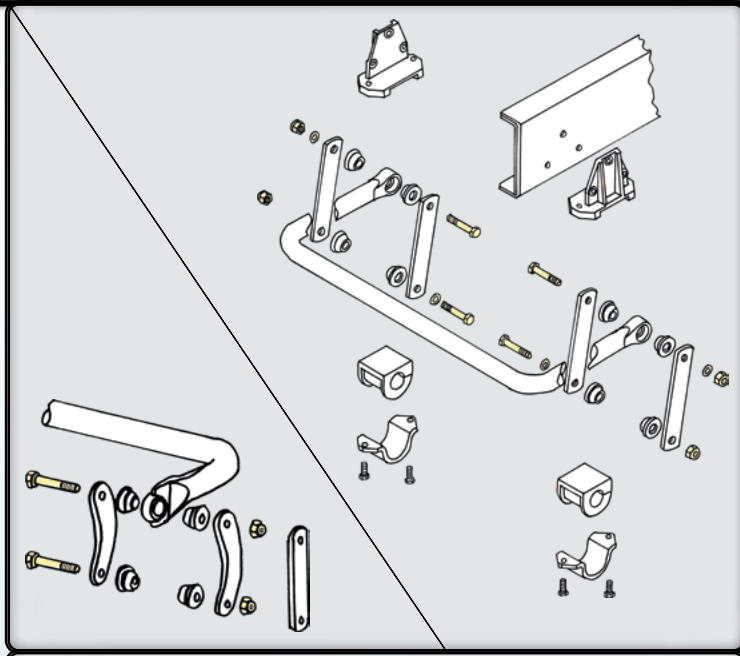

Material: Steel

kg 0,85

This part is designed to replace the OE part and is used exclusively in the Scania anti-roll bar and it is equipped with special dimensions.

This part is not a general use spare part and it is not in accordance with DIN or any other standard.

This anti-roll bar spare part can not be replaced by generic parts.

LPGRS	08/2016 →
6x4 8x4 6x6 8x8 6x2 8x2	

GPR	2004 - 2018
94 - 164	1994 - 2008
93 - 143	1987 - 1996

94, 114, 124	1994 - 2010

312400

Bushing (dry) → Front of 1. and 2. front axle

ScR

2470800
2470850

Inside Ø: 24,2 mm
Outside Ø: 69,5 mm
Length: 95,9 mm



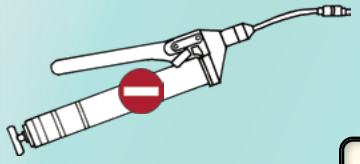

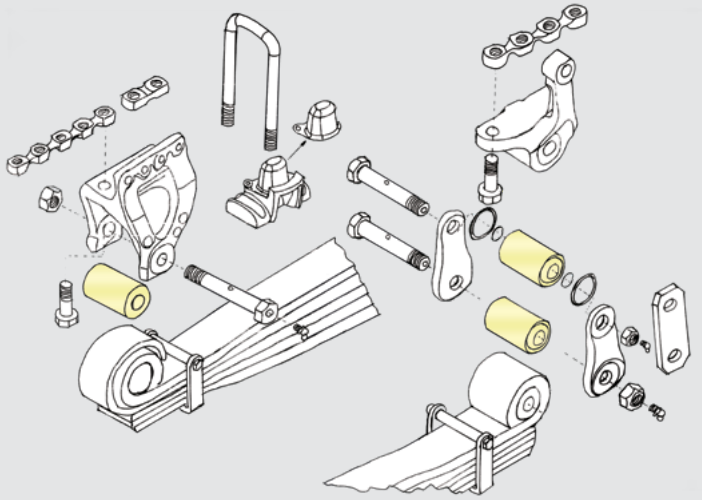



LPGRS

08/2016 →

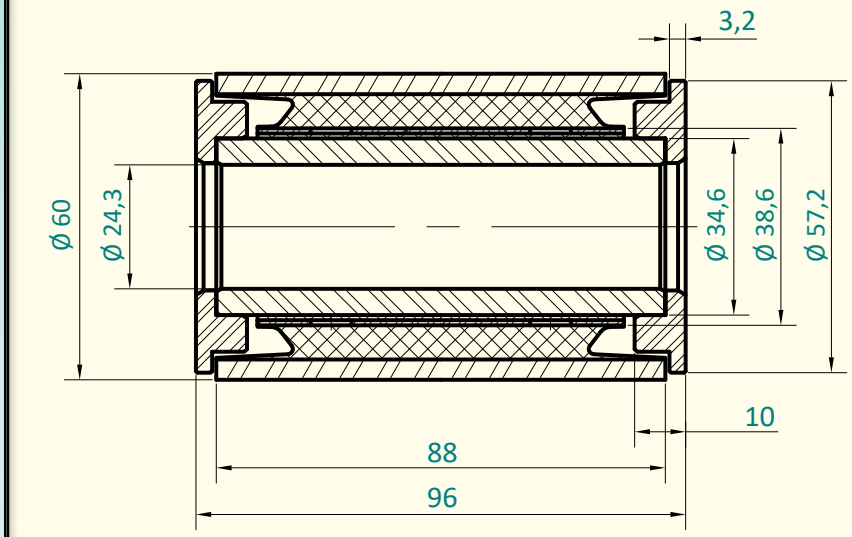

kg ?

Suitable shaft kits:

HD **312406**
ScR 2075466

HD **312408**
ScR 1802033

HD **312412**
ScR 1802033

312402

Bushing (lubricated) → Front / Rear of 1. and 2. front axle

ScR **2470018**



Inside Ø: 24,6 mm
Outside Ø: 68,8 mm
Length: 96,2 mm

Inside bushing grease groove:
O-ring: 2 x 24,2 x 3,0 mm

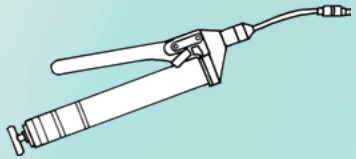

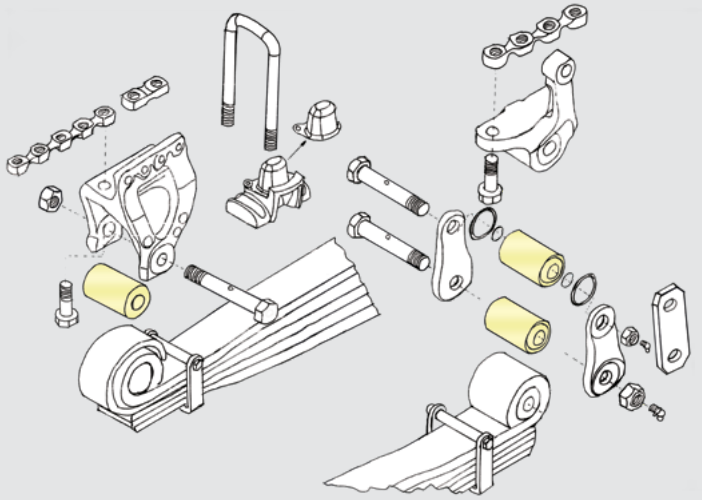

LPGRS 08/2016 →

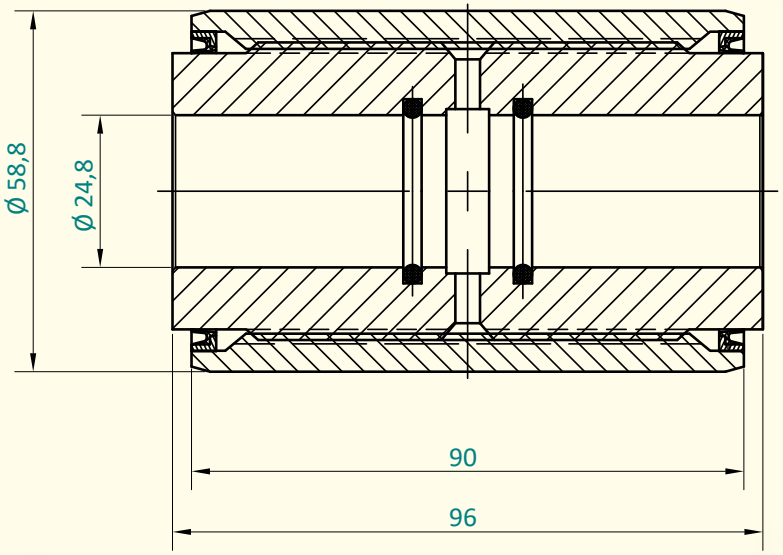

kg 0,0

Suitable shaft kits:

HD **312405**	ScR 2075463	200 mm
HD **312407**	ScR 2290957	170 mm
HD **312410**	ScR 2075445	140 mm

312405

Shaft kit (lubricated) → Front of 1. front axle

ScR **2075463** + **1886714**

Shaft Ø: 24,4 mm
Thread: M24 x 3,0 mm
Length: 200 mm

Grease hole: Ø 4 mm
Thread: M10 x 1,0 mm

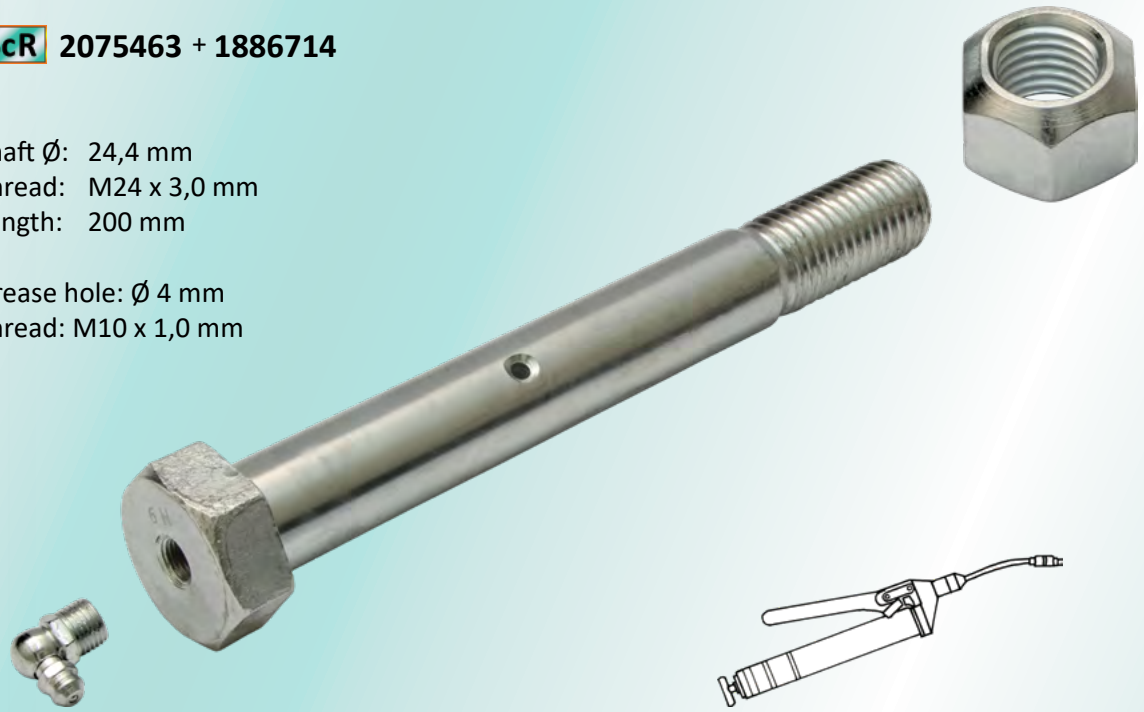

kg 0,91

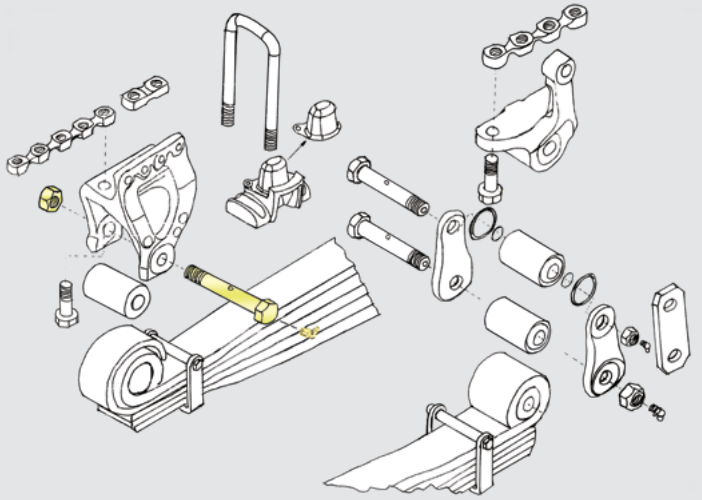

LPGRS 08/2016 →

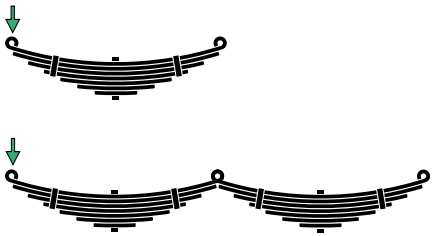

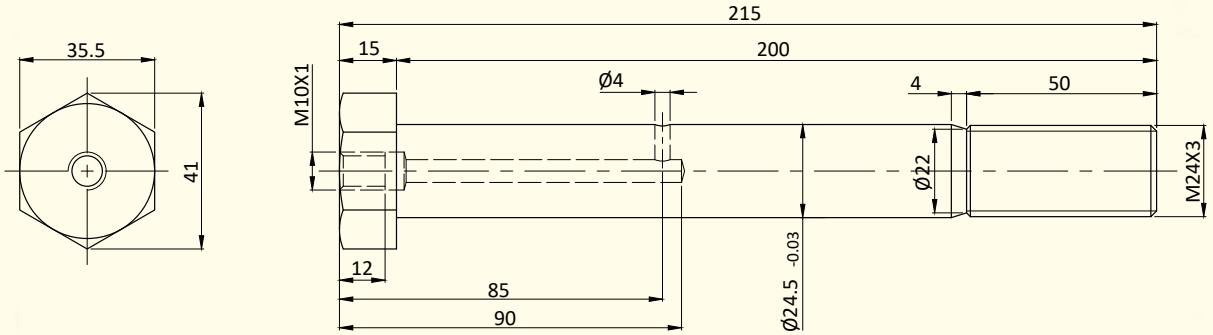

Please note ! Shaft diameters are different:

Lubricated	312405	=	Ø 24,4 mm
Dry	312406	=	Ø 23,8 mm

Suitable bushing:
HD **312402**
ScR 2470018

312406

Shaft kit (dry) → Front of 1. front axle

ScR **2075466** + **1886714**

Shaft Ø: 23,8 mm
Thread: M24 x 3,0 mm
Length: 200 mm

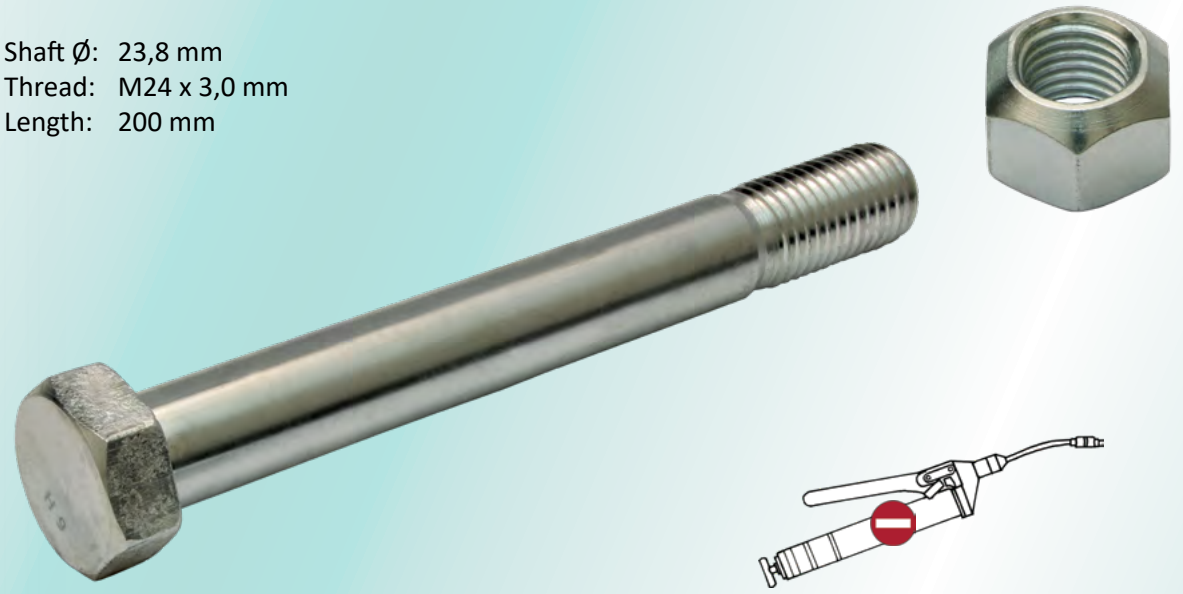

kg 0,92

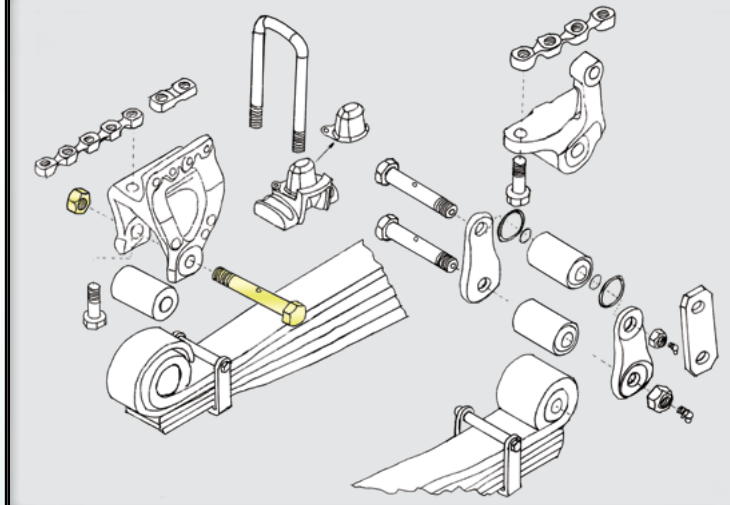

LPGRS 08/2016 →





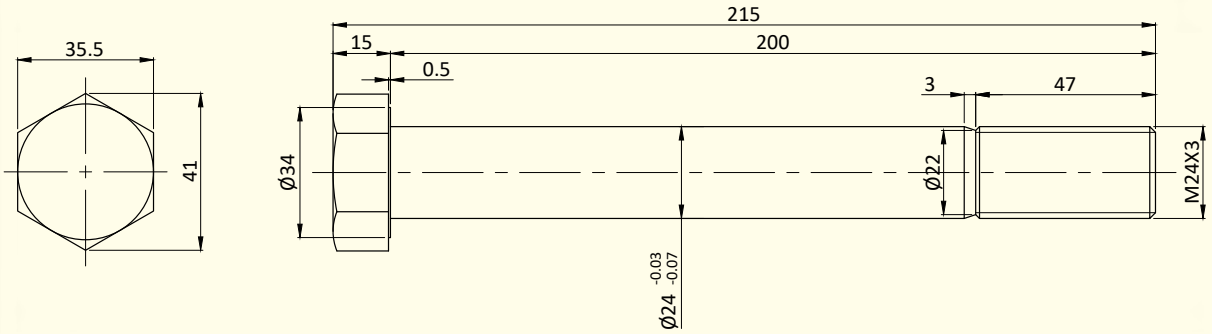

Please note ! Shaft diameters are different:

Lubricated	312405	=	Ø 24,4 mm
Dry	312406	=	Ø 23,8 mm

Suitable bushing:
HD **312400**
ScR 2470800

312407

Shaft kit (lubricated) → Front of 2. front axle

ScR **2290957** + **1886714**

Shaft Ø: 24,4 mm
Thread: M24 x 3,0 mm
Length: 170 mm

Grease hole: Ø 4 mm
Thread: M10 x 1,0 mm

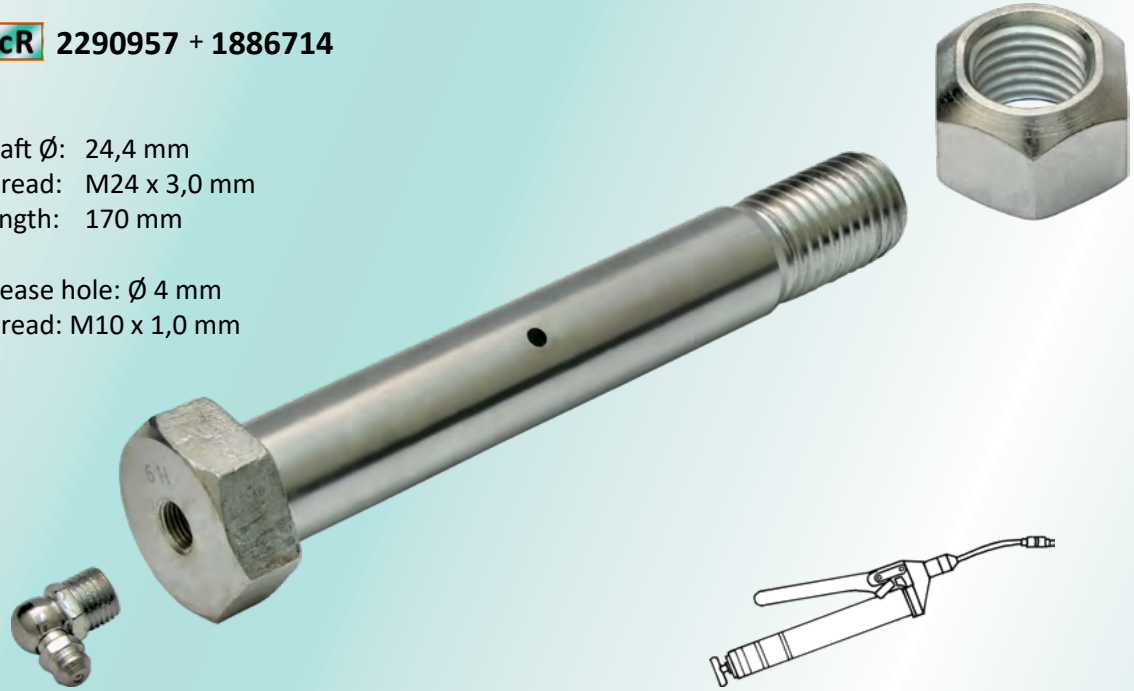

kg 0,8

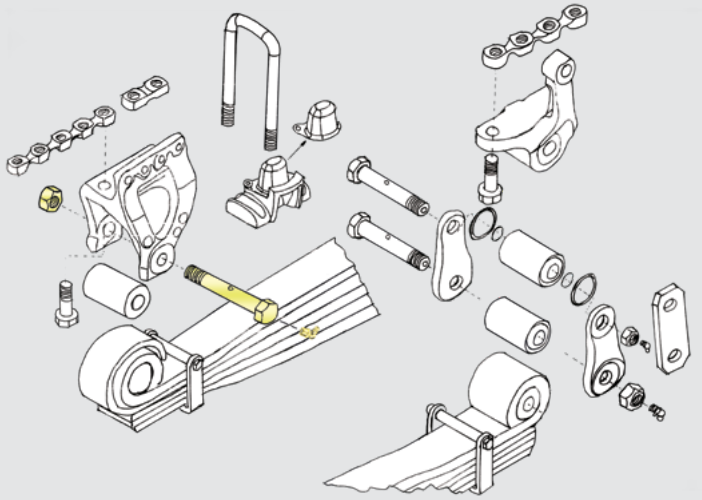

LPGRS 08/2016 →

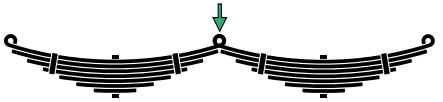

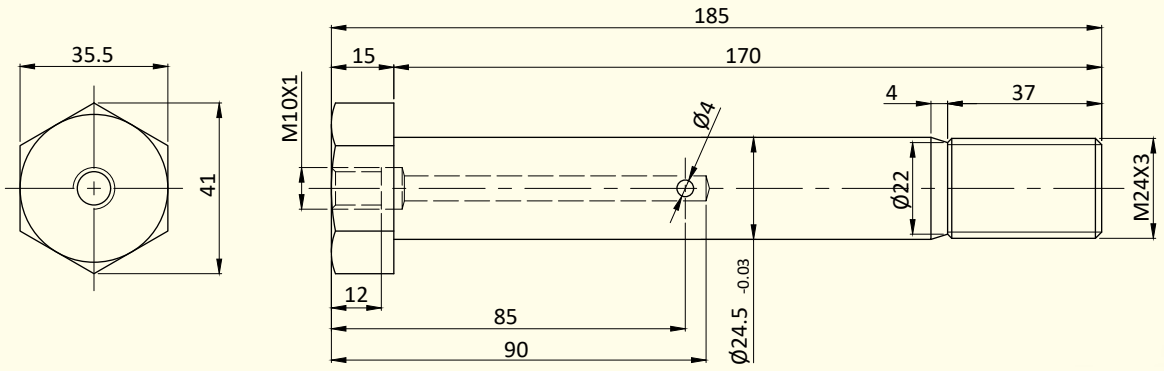

Suitable bushing:
HD **312402**
ScR 2470018

312408

Shaft kit (dry) → Front of 2. front axle

ScR **1475241** + **1886714**

Shaft Ø: 23,8 mm
Thread: M24 x 3,0 mm
Length: 170 mm

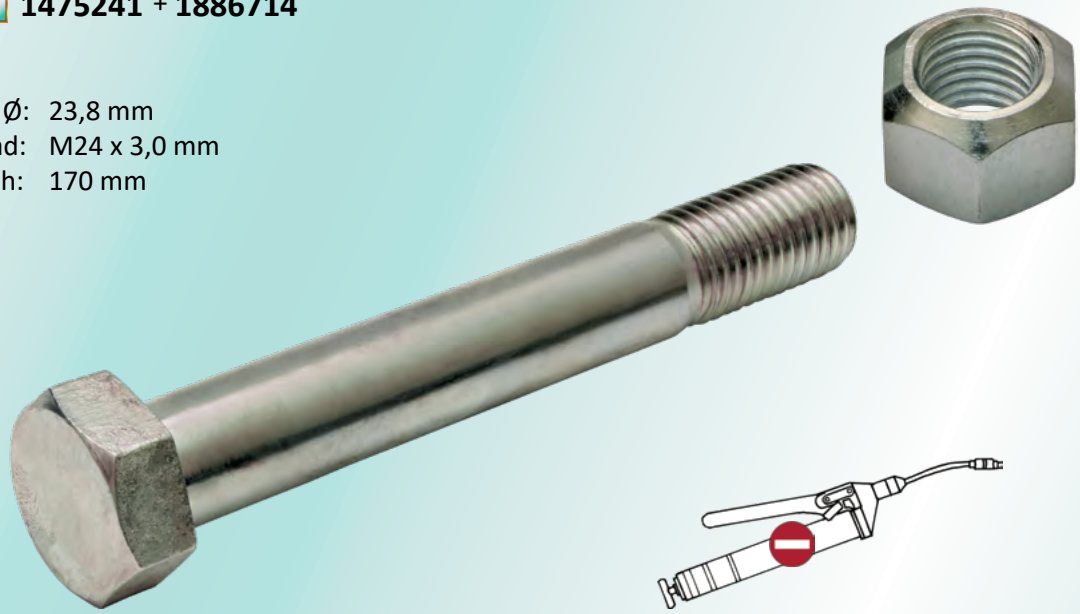

kg 0,81

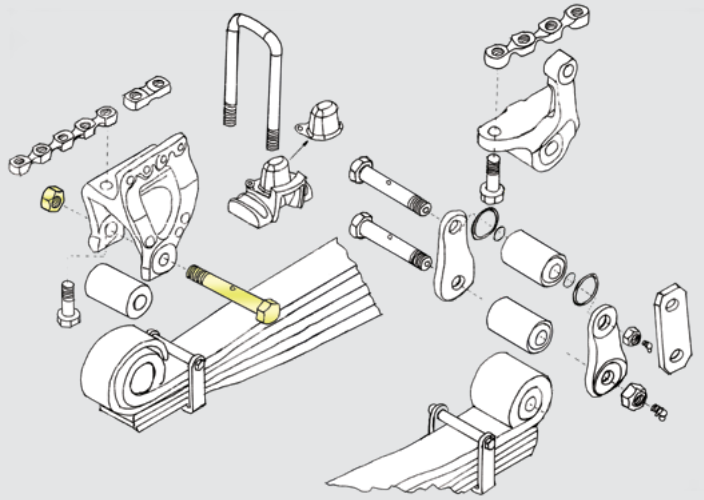

LPGRS 08/2016 →

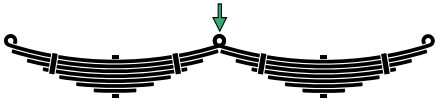

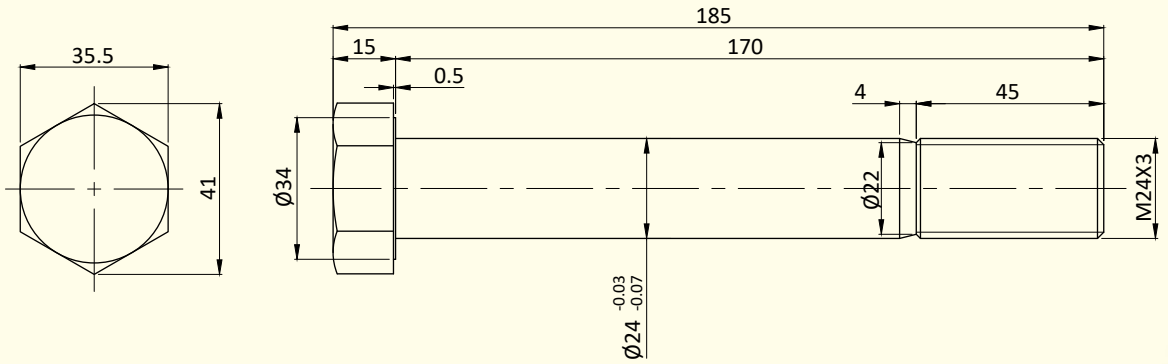

Suitable bushing:
HD **312400**
ScR 2470800

312410

Shaft kit (lubricated) → Rear of 1. and 2. front axle (lower/upper)

ScR

2075445
2416727

+ **1886714**

Shaft Ø: 24,4 mm
Thread: M24 x 3,0 mm
Length: 140 mm

Grease hole: Ø 4 mm
Thread: M10 x 1,0 mm



kg 0,69

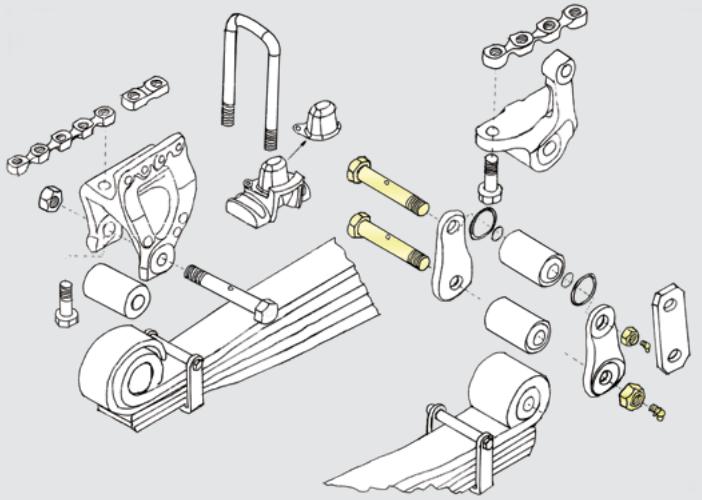

LPGRS

08/2016 →

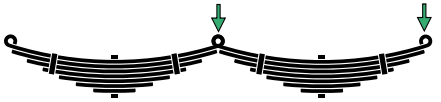

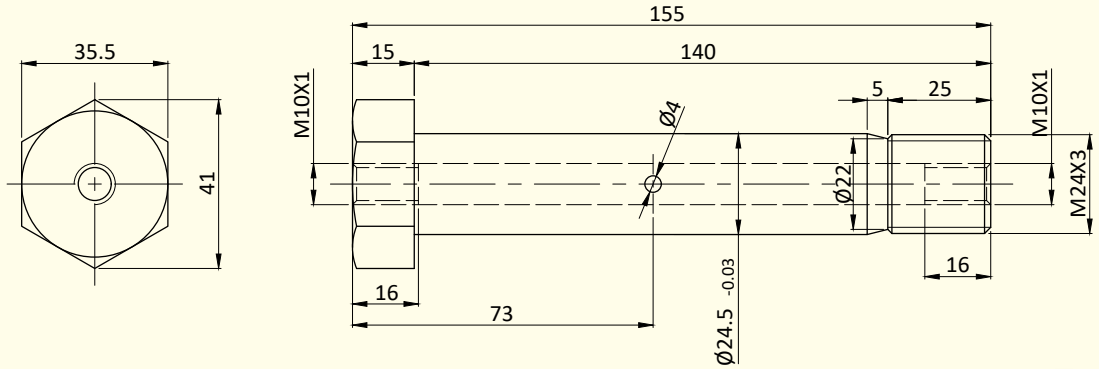

Suitable bushing:
HD **312402**
ScR 2470018

312412

Shaft kit (dry) → Rear of 1. and 2. front axle (lower/upper)

ScR **1802033** + **1886714**

Shaft Ø: 23,8 mm
Thread: M24 x 3,0 mm
Length: 140 mm

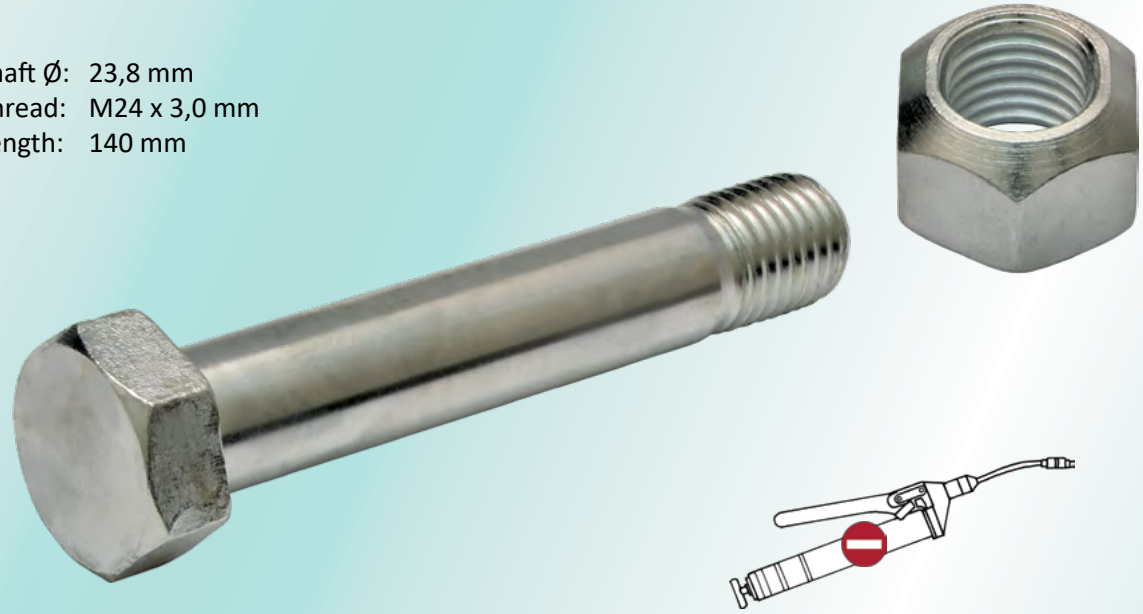

kg 0,72

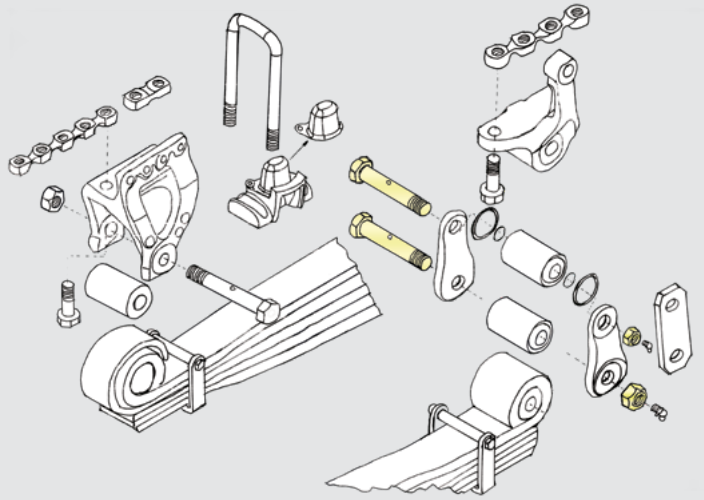

LPGRS 08/2016 →

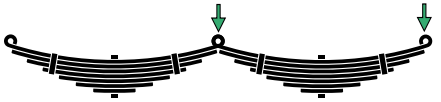

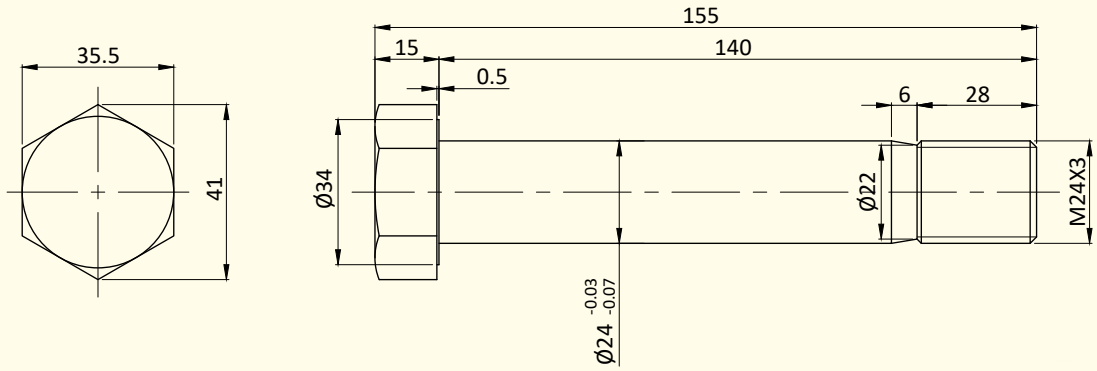

Suitable bushing:
HD **312400**
ScR 2470800

312415

Link (lubricated) → Rear of 1. and 2. front axle

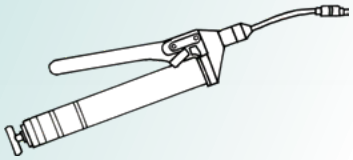

ScR **2149193**

Length: 170 mm
Width: 76 / 55 mm
Thickness: 15 / 10 mm
Holes: 2 x Ø 24,6 mm



kg 0,0

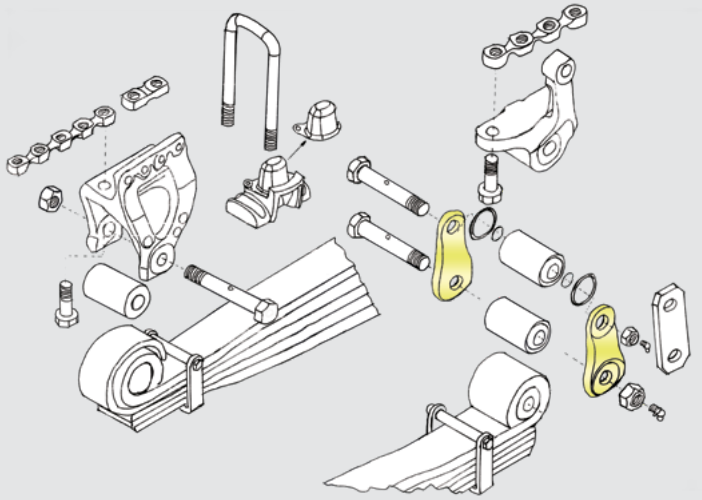

LPGRS

08/2016 →

Suitable bushing:
HD **312402**
ScR 2470018

Suitable shaft kit:
HD **312410**
ScR 2075463

312416

Link (dry) → Rear of 1. and 2. front axle

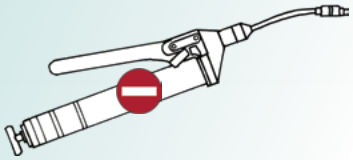

ScR **1925637**

174 x 50,5 x 10 mm
2 x hole Ø 24,2 mm



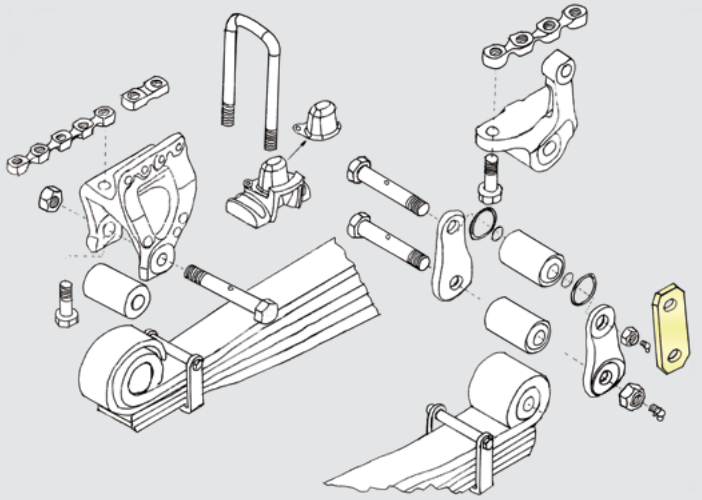

LPGRS

08/2016 →

Suitable bushing upper:
HD **312400**
ScR 2470800

Suitable bushing lower:
HD **312401**
ScR 2470850

Suitable shaft kit rear:
HD **312412**
ScR 1802033

kg 0,0

312418

Bump stop → 1. front axle

ScR **2326006**



Materials:
- 3 mm steel
- Rubber

kg 0,24

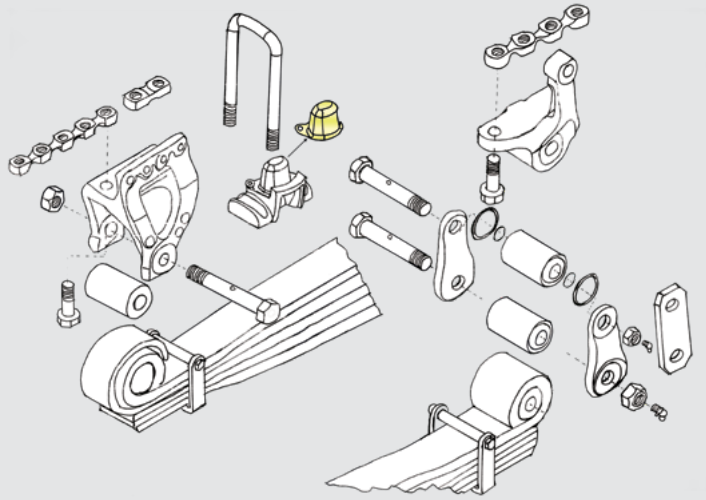

2 →

LPGRS 08/2016 →

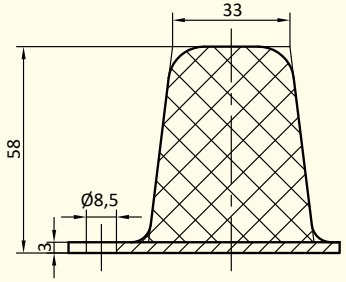

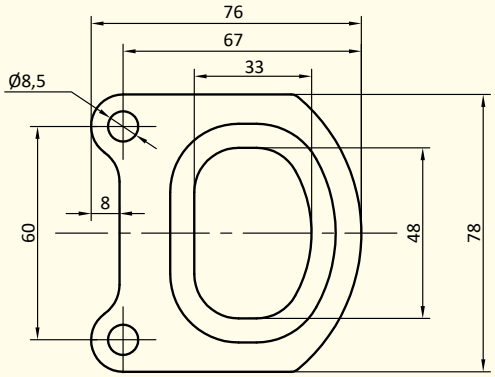

Suit for clamp pad:

HD -

ScR 2326006

312419

Bump stop → 1. and 2. front axle

ScR **2643819**

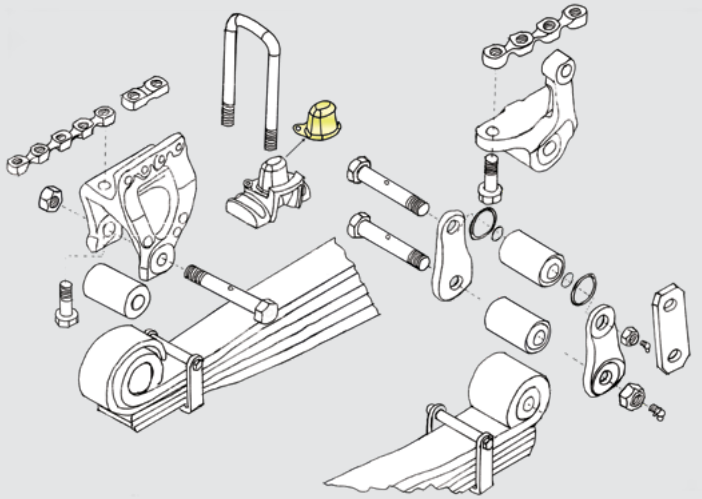

LPGRS

08/2016 →

Coming to our product selection 2021

kg 0,0

Suit for clamp pad:

HD -

ScR 2613701

312690

Limiter

ScR

222095
1327212
1307794

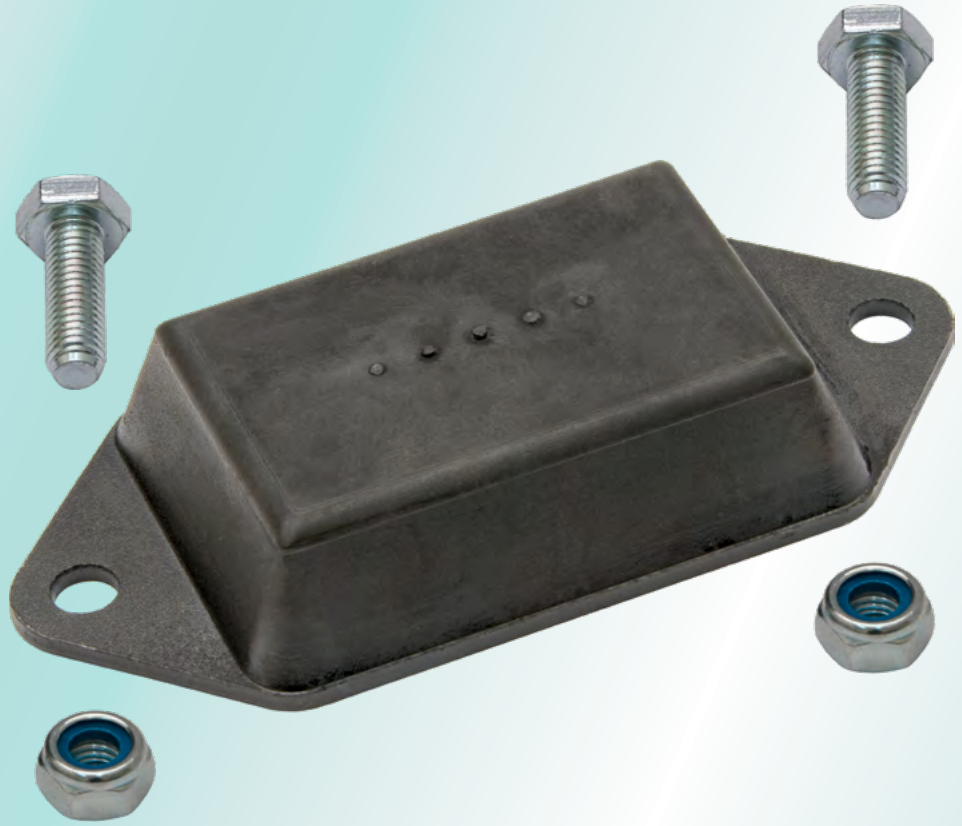

kg 0,59

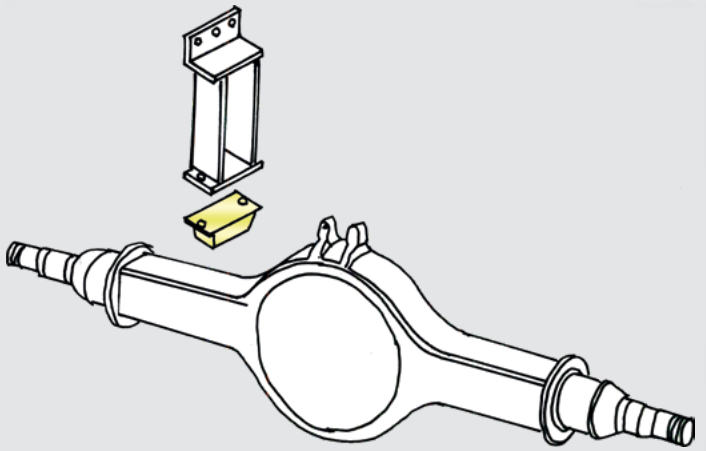

Extra parts:

Screw:	2 x ScR 814822	M10 x 1,5 x 30 mm
Nyloc nut:	2 x ScR 815147	M10 x 1,5 mm

Materials:
SBR-rubber
Steel

Dimensions:
Length: 165 mm
Width: 76 mm
Height: 29,5 mm
Steel plate: 4 mm

GPR	BT 200/300/301	04/2004 - 2017
114 - 164	BT 200/300	06/1995 - 12/2004

312691

Bump stop

ScR 1370141

Materials:
- Aluminium
- EPDM rubber



kg 1,81

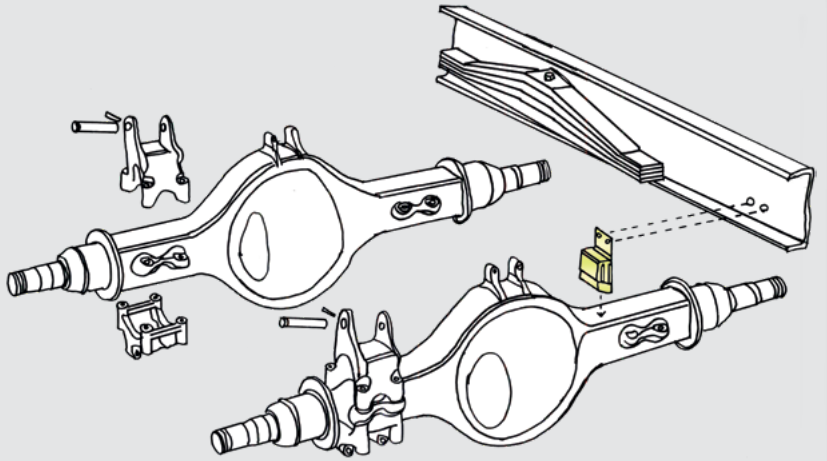

BT 201, BT 300

LPGRS	08/2016 →
GPR	04/2004 - 2018
94 - 164	06/1995 - 12/2004

LPGRS 08/2016 →

4 x 2 4 x 4

312693

Bump stop

ScR **1427981**

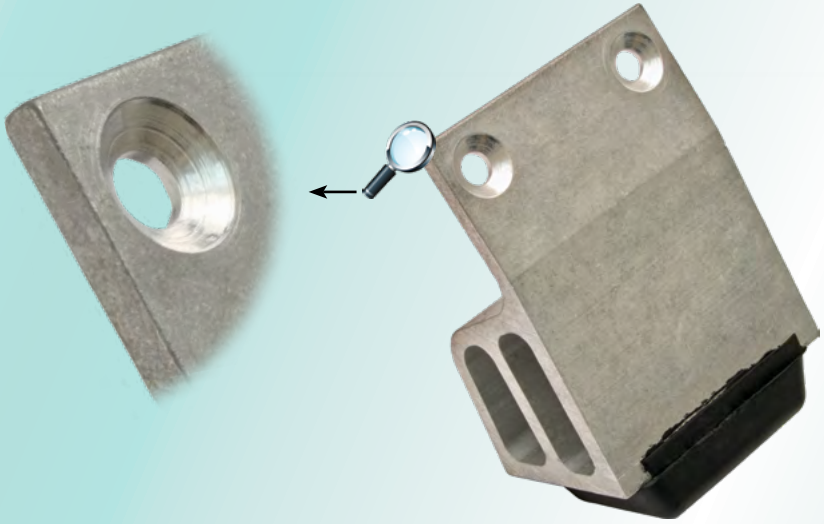

Materials:
- Aluminium
- EPDM rubber

Hardness: A75 rubber



Bump stop:

Height: 210,4 mm
Width: 140,0 mm
Depth: 105,1 mm

EPDM rubber:

Thickness: 29,5 mm
Width: 117 mm
Depth: 83,5 mm
2 x Ø: 15 mm

kg 2,3

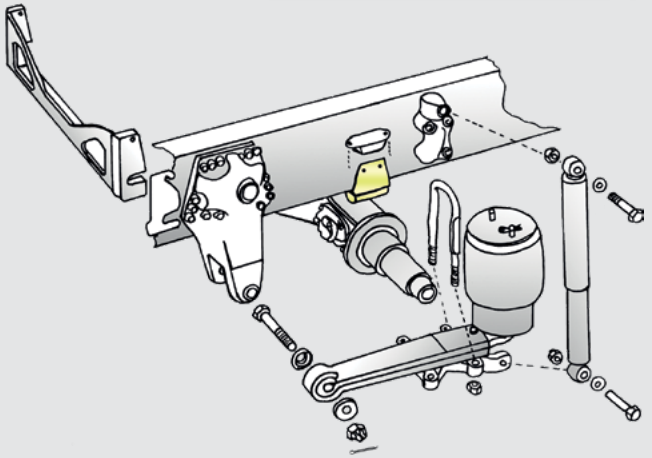

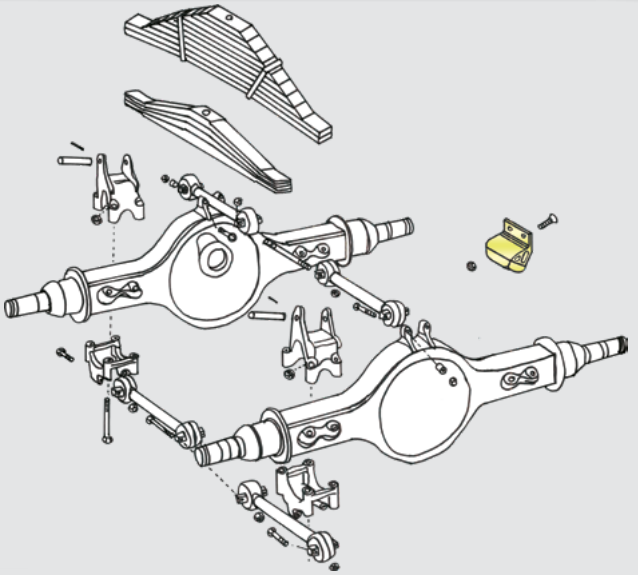

LPGRS	05/2016 →	ADA, ASA, ARA
GPR	04/2004 - 2018	ADA, ASA, ARA + BT201
94 - 164	06/1995 - 12/2004	BT201 balance bogie

312846

Limiter

ScR 2458614

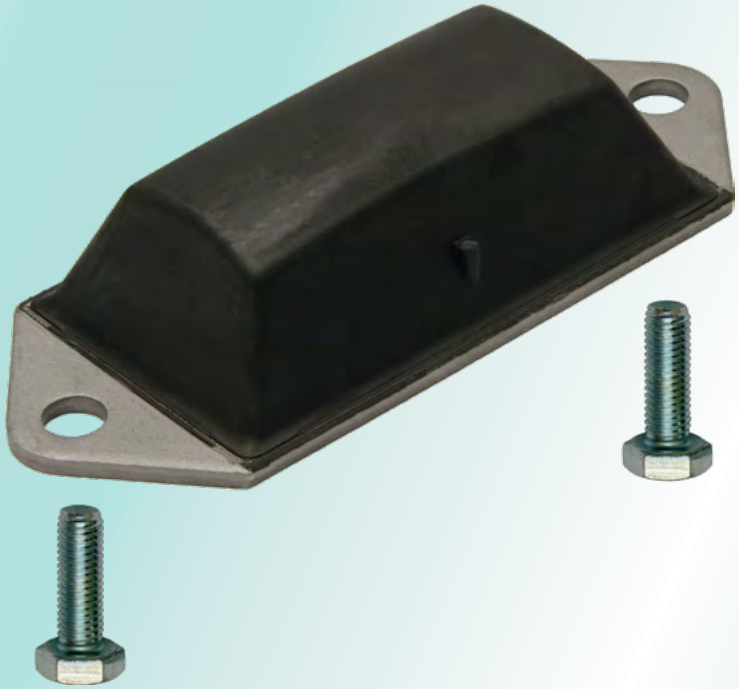

Dimensions:
163,9 x 66 x 35,5 mm

Materials:
- 4 mm Steel
- Rubber

Screws:
M10 x 1,5 x 30 mm

kg 0,51

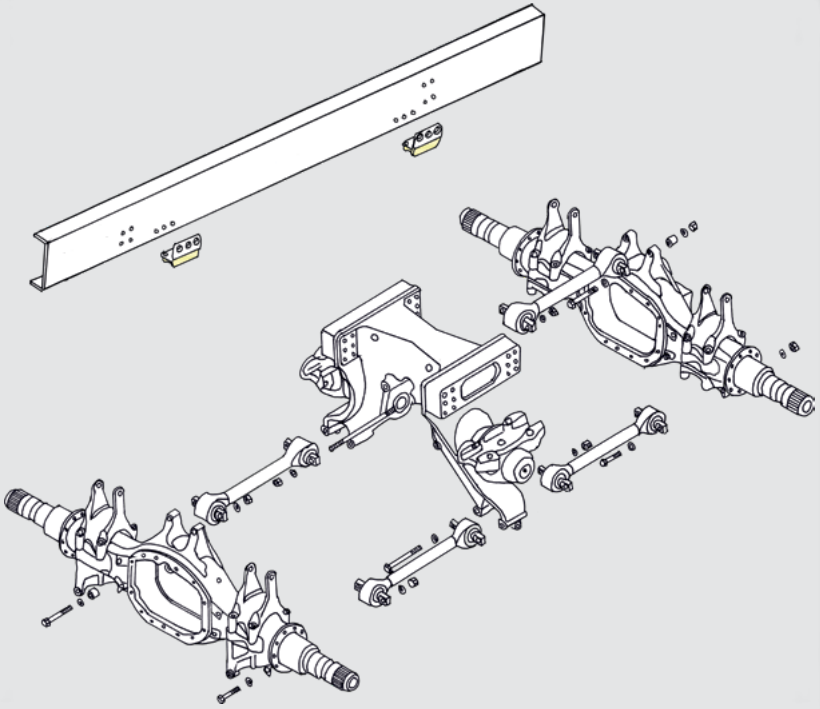

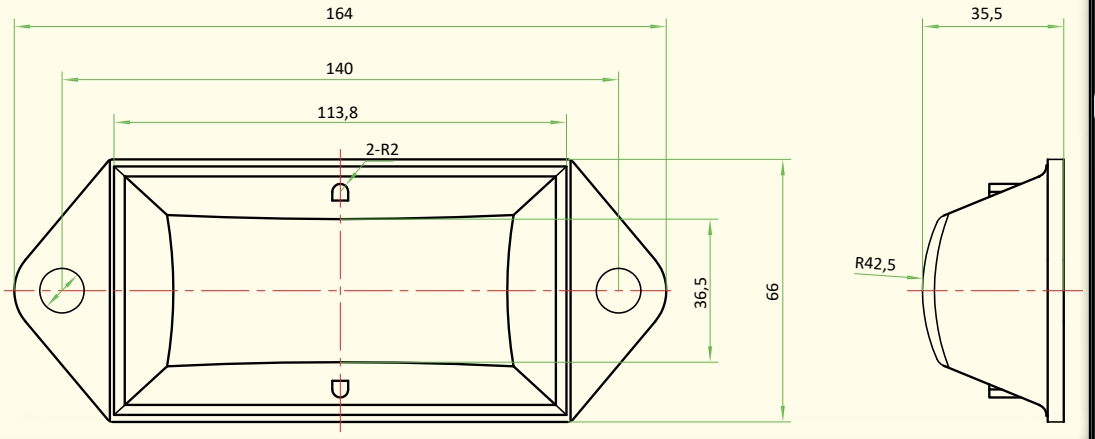

ScR 2458616 →

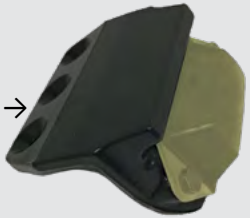

HD 312846
ScR 2458614

4 →

BT 301 B, BT 400 S

LPGRS 09/2016 →
GPR 2004 - 2018

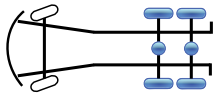

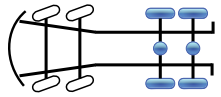

312854

Bump stop

ScR

1370142
1377692
1361156

1770292
1730310

Materials:
- Steel
- EPDM rubber

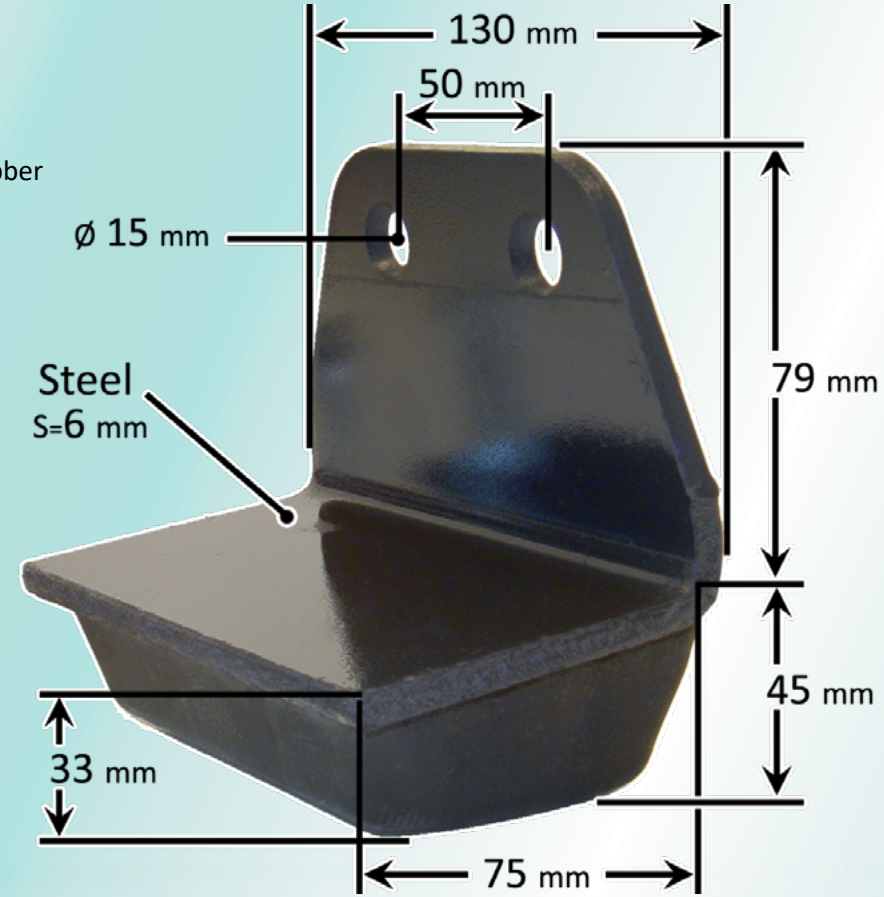

kg 1,3

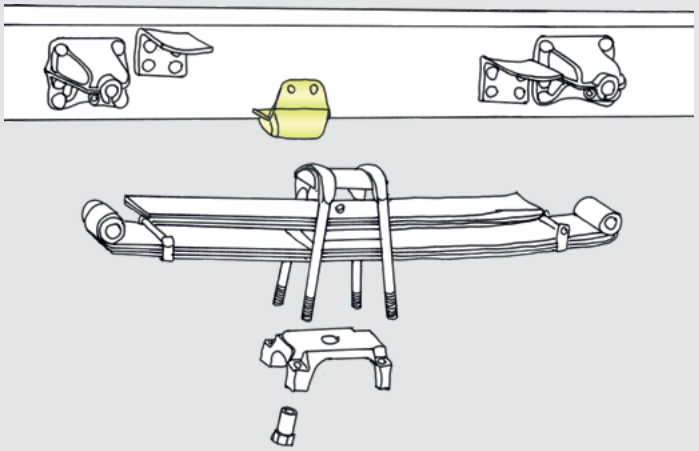

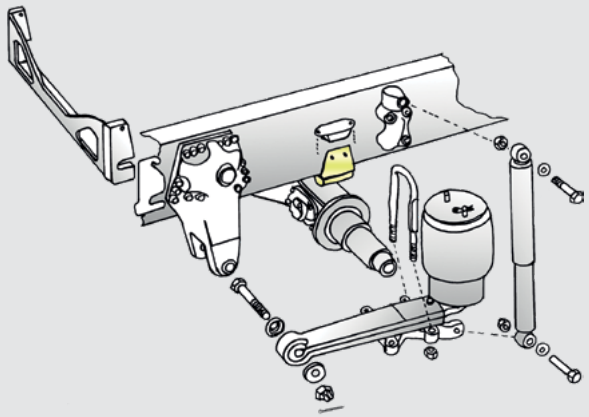

LPGRS	08/2016 →
GPR	04/2004 - 2018
94 - 164	1987 - 1996
93 - 143	

312480

Flange screw

ScR 1526001

M20 x 2,5 x 60 mm



312481

Flange screw

ScR 1516103

M20 x 2,5 x 70 mm



312482

Flange screw

ScR 1526002

M20 x 2,5 x 80 mm



312483

Flange screw

ScR 1526003

M20 x 2,5 x 90 mm



312484

Flange screw

ScR 1526004

M20 x 2,5 x 100 mm



312487

Flange screw

ScR 2449312

M20 x 2,5 x 160 mm

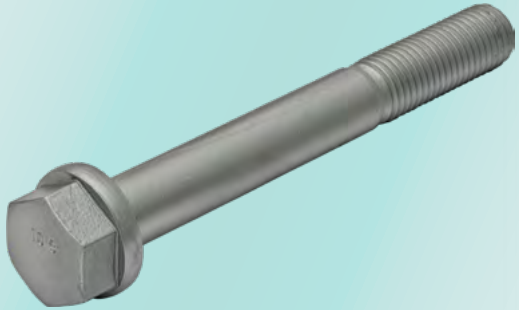

312488

Flange screw

ScR 2449313

M20 x 2,5 x 180 mm





Suitable for various places in Scanias and other vehicles if the measurements match.

312940

Spring shaft + bushing kit

ScR	
2097427	2085822
1771876	355145
551212	128681

kg 1,01

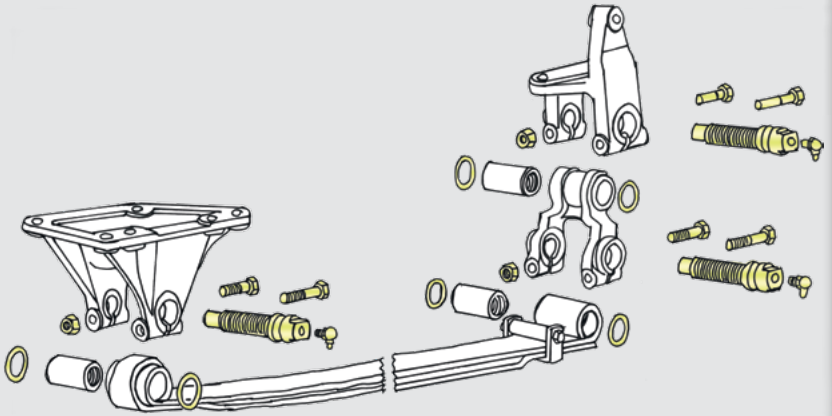

23,0 x 6,5 mm NBR
HD 312944
ScR 182929

Ø 13 mm
ScR 803070

M12 x 1,75 mm
ScR 815148

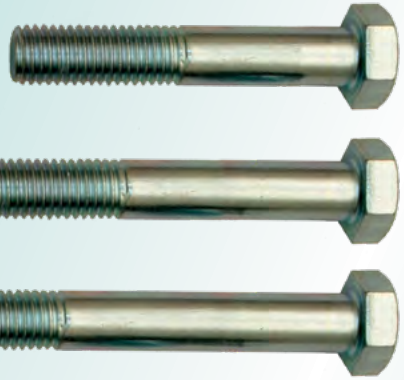

M12 x 1,75 x 70 mm
ScR 814895

M12 x 1,75 x 90 mm
ScR 814897

M12 x 1,75 x 100 mm
ScR 814898

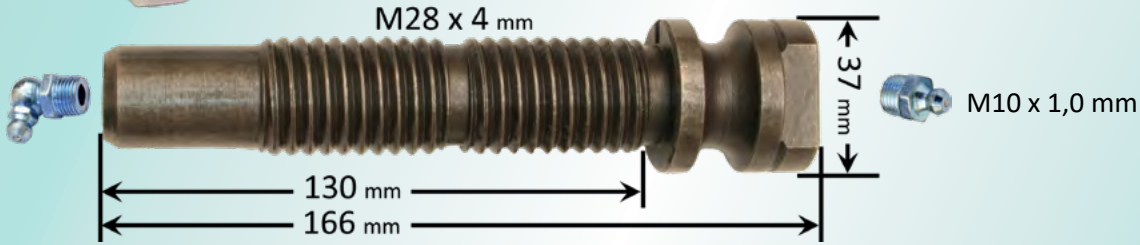

M10 x 1,0 mm

M10 x 1,0 mm

GPR
94 - 164
93 - 143
82 - 142

04/2004 - 2018
06/1995 - 12/2004
1987 - 1996

93, 113
82, 92, 112

KN, 94, 114, 124

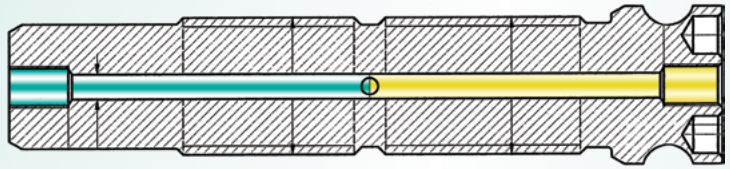

ScR	
2097427	2085822
1771876	355145

Same kit with bushing:
HD 312946



312945

Bushing

ScR 128680

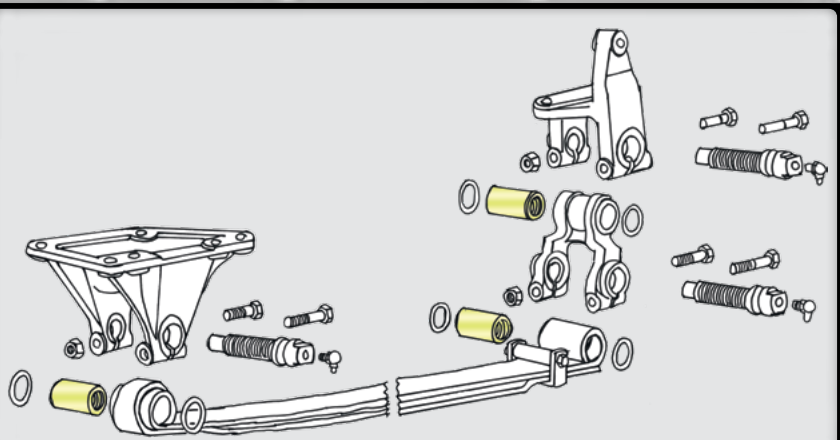

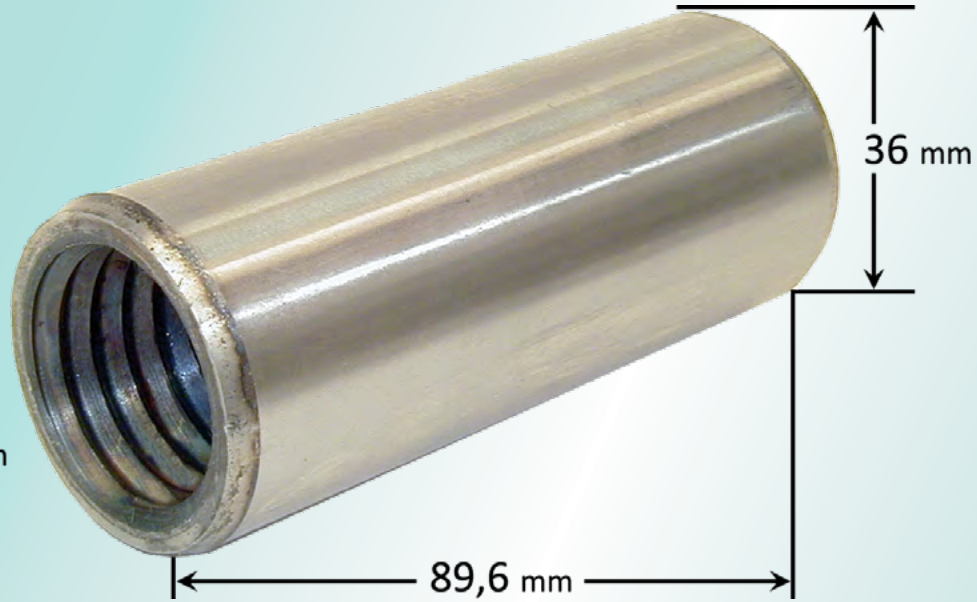

M28 x 4 mm
ø 25,6 mm

kg 0,31

GPR	04/2004 - 2018
94 - 164	06/1995 - 12/2004
93 - 143	1987 - 1996
82 - 142	

93, 113
82, 92, 112

KN, 94, 114, 124

Suitable O - ring:

HD 312944



Suitable Spring shaft kit:

HD 312940



312946

ScR

Spring shaft + bushing kit
312940 + 312945

kg 1,31

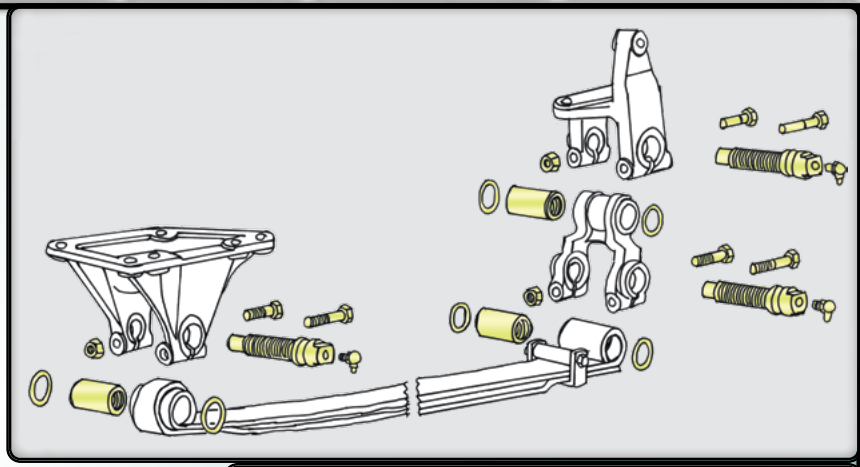



23,0 x 6,5 mm NBR
HD 312944
ScR 182929



Ø 13 mm
ScR 803070



M12 x 1,75 mm
ScR 815148

HD 312945
ScR 128680





M12 x 1,75 x 70 mm
ScR 814895



M12 x 1,75 x 90 mm
ScR 814897



M12 x 1,75 x 100 mm
ScR 814898

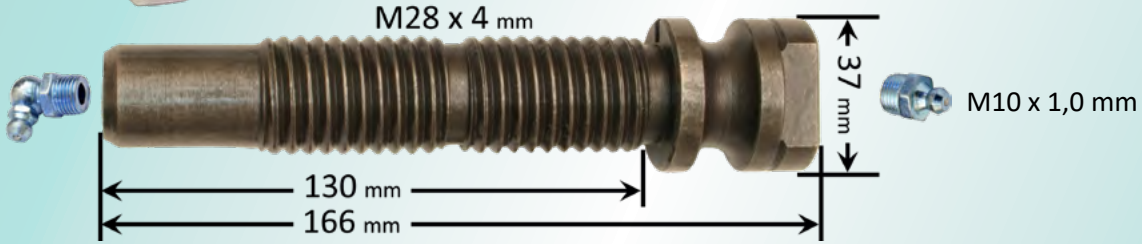



ScR
2097427
1771876

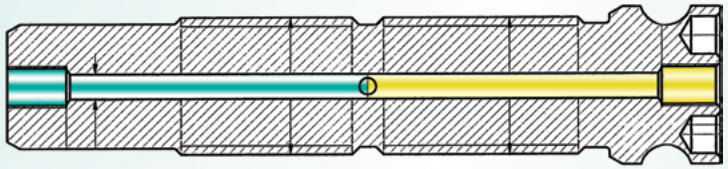



ScR
2085822
355145







GPR	04/2004 - 2018
94 - 164	06/1995 - 12/2004
93 - 143	1987 - 1996
82 - 142	



93, 113
82, 92, 112

KN, 94, 114, 124

312925

Spring shackle without bushing

ScR

1377739
1103026
275568

Material:
Cast iron



kg 1,89

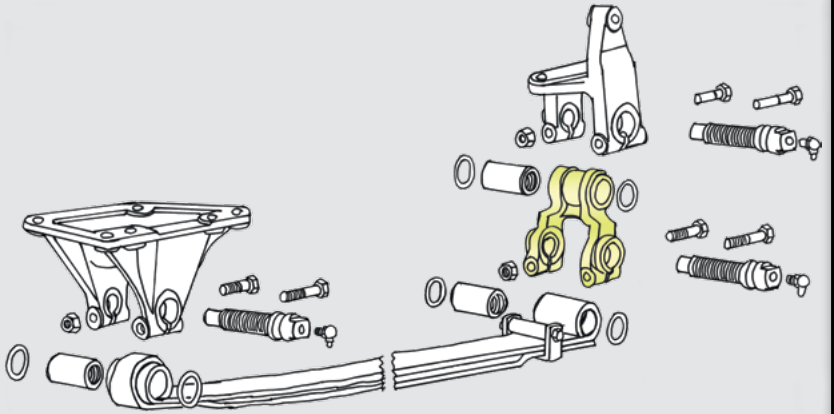





GPR	04/2004 - 2018
94 - 164	06/1995 - 12/2004
93 - 143	




Suitable spring shaft kit:

HD 312946



312713

Cradle → 21 - 32 tn

ScR 1383063



ScR

2239965	30/32 tn
1949551	30/32 tn
1874825	30/32 tn
1404385	21-32 tn
1404352	21/26 tn
1399489	21/26 tn
1388180	21/26 tn

Materials:
- Cast iron
- QT500



kg 45,6

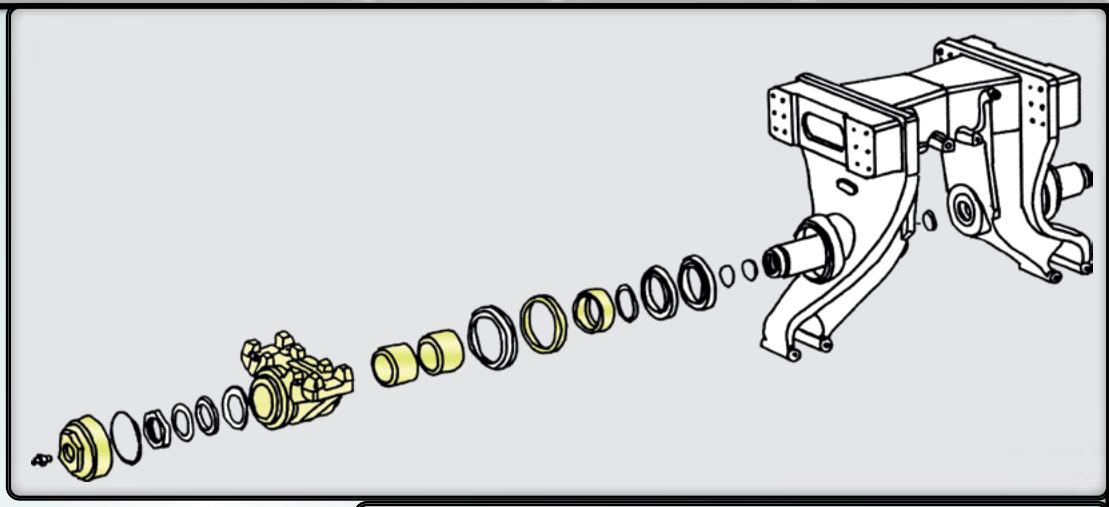

LPGRS 08/2016 →
BT 300 B/I, BT 301 B, BT 301 I/S — BT400

GPR 04/2004 - 2018
BT 300
BT 301
BT 201 Multi leaf spring

94 - 164 06/1995 - 12/2004
BT 300
BT 201 Multi leaf spring 10x20 / 90mm

Suitable **Repair** kit: 312718

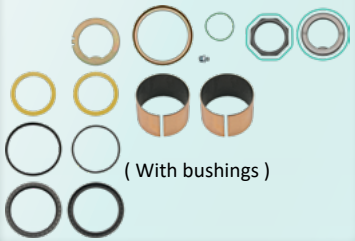

(With bushings)

Suitable **Installation** kit: 312717



312717

Installation kit for cradle → 312713

ScR



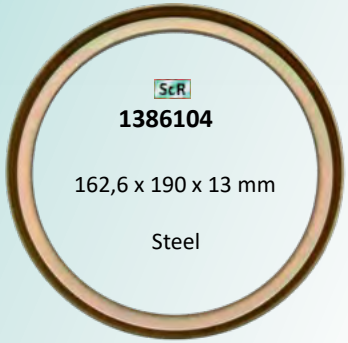



64,5 x 3,0 x 70,5 mm



ScR 806312
M10 x 1,0 mm



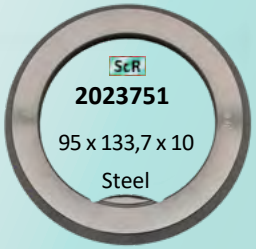

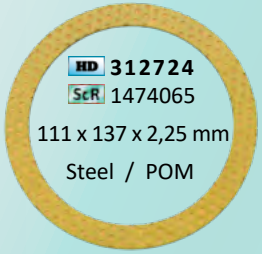

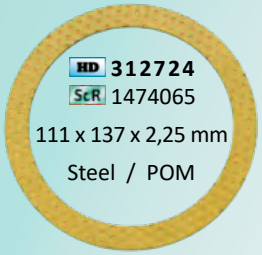

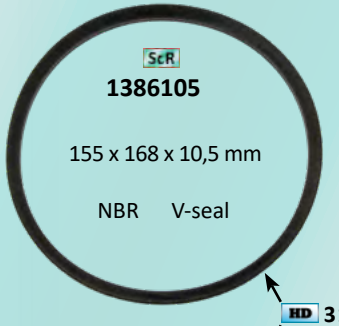

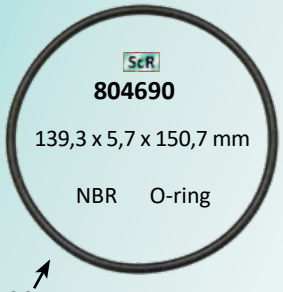

HD 312729





kg
1,72

Suits for cradle → 312713



Repair kit: 312718

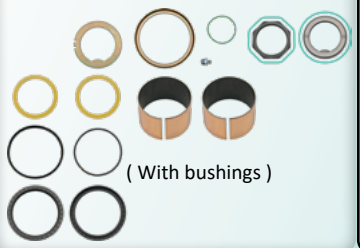

(With bushings)



GPRS	08/2016→
GPR	04/2004 - 2018
94 - 164	06/1995 - 12/2004
93 - 143	1987 - 1996
BT 201	21/26 tn
BT 300	21/26/30/32 tn
BT 301	21/26/30/32 tn
BT 400	

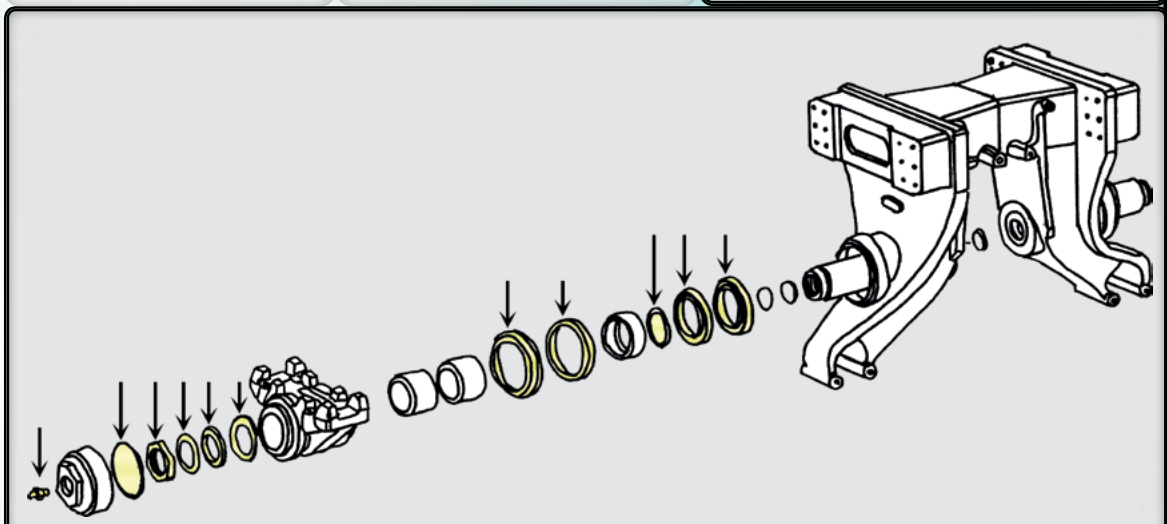

312718

Repair kit for cradle → 312713

ScR

2262363
2638828

ScR **204723**
95,3 x 2 mm
Steel

ScR **1386104**
162,6 x 190 x 13 mm
Steel

ScR **1331820**
FPM
64,5 x 3,0 x 70,5 mm

ScR **806312**
M10 x 1,0 mm

HD - extra parts

HD **312727**
ScR 1343178
M95 x 105,5 x 12
Steel

ScR **2023751**
95 x 133,7 x 10
Steel

HD **312724**
ScR 1474065
111 x 137 x 2,25 mm
Steel / POM

HD **312724**
ScR 1474065
111 x 137 x 2,25 mm
Steel / POM

HD **312722**
ScR 1799423
21 → 32 tn
110 x 115 x 2,5 x 80 mm

HD **312722**
ScR 1799423
21 → 32 tn
110 x 115 x 2,5 x 80 mm

Steel / POM

GPRS	08/2016→
GPR	04/2004 - 2018
94 - 164	06/1995 - 12/2004
93 - 143	1987 - 1996
BT 201	21/26 tn
BT 300	21/26/30/32 tn
BT 301	21/26/30/32 tn
BT 400	

ScR **1386105**
155 x 168 x 10,5 mm
NBR V-seal

ScR **804690**
139,3 x 5,7 x 150,7 mm
NBR O-ring

HD **312729**

ScR **1386227**
140,8 x 14,8 x 170,4 mm
NBR Seal

ScR **1386227**
140,8 x 14,8 x 170,4 mm
NBR Seal

kg
2,83

Suits for cradle → 312713



312724

Side slick

ScR **1474065**

Material:
- Steel
- 2Y-POM

Dimensions:
Ø 111 mm
Ø 137 mm
S = 2,3 mm

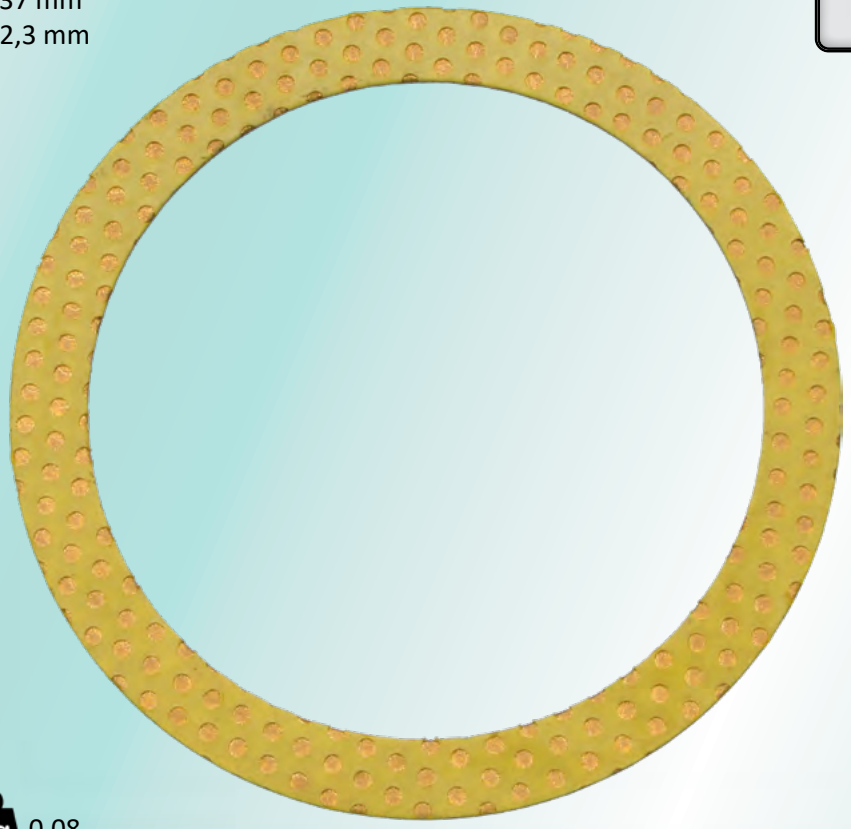

kg 0,08

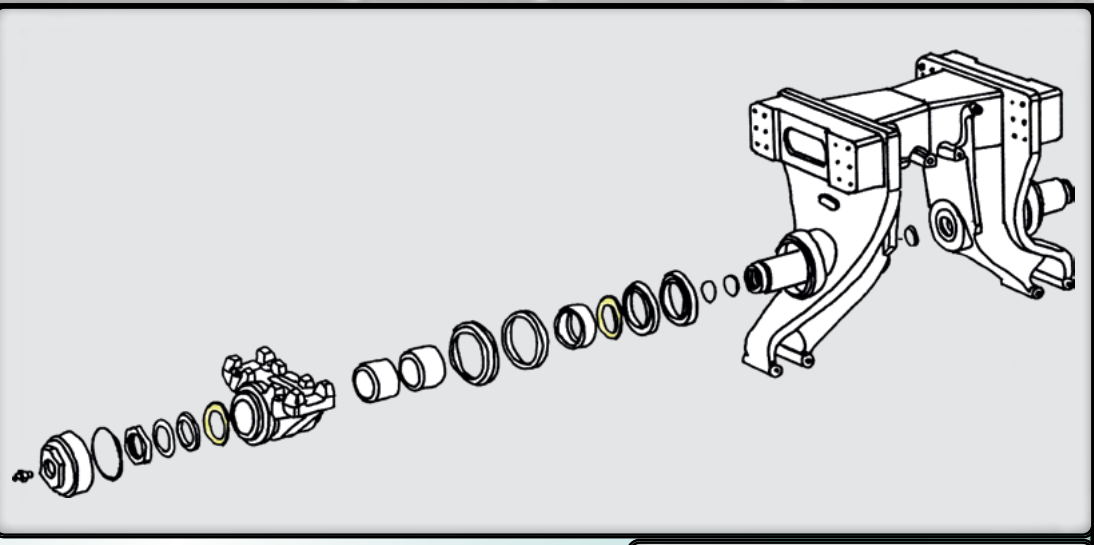

LPGRS	08/2016→
GPR	04/2004→
94 - 164	06/1995 - 12/2004
93 - 143	1987 - 1996

BT 201	21/26 tn
BT 300	21/26/30/32 tn
BT 301	21/26/30/32 tn

312722

Bushing → 32 tn

ScR

1799423
1754546
378277
204733

Material:
- Steel
- 2X-POM

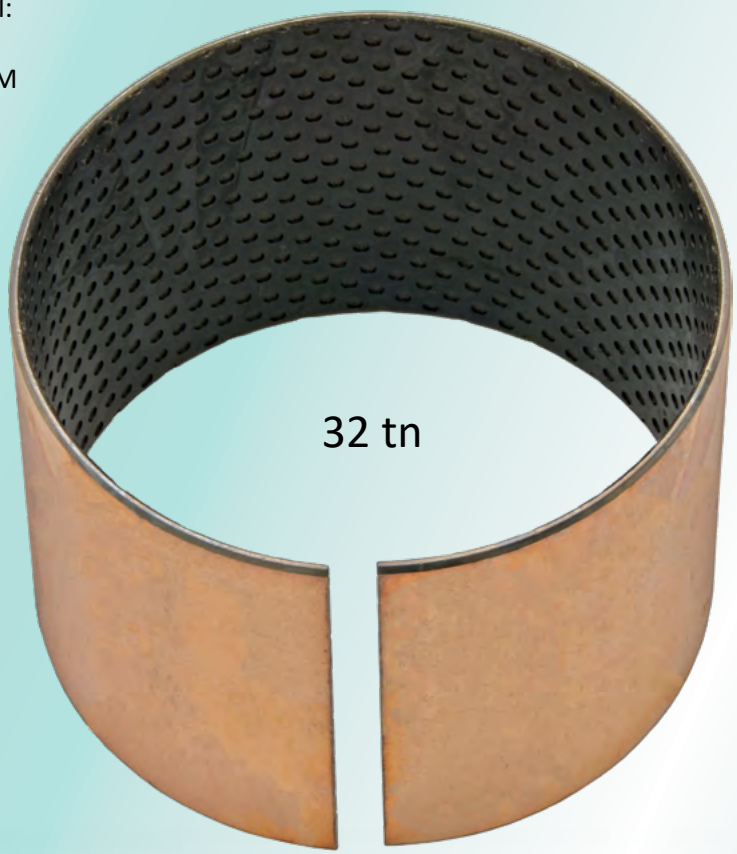

kg 0,5

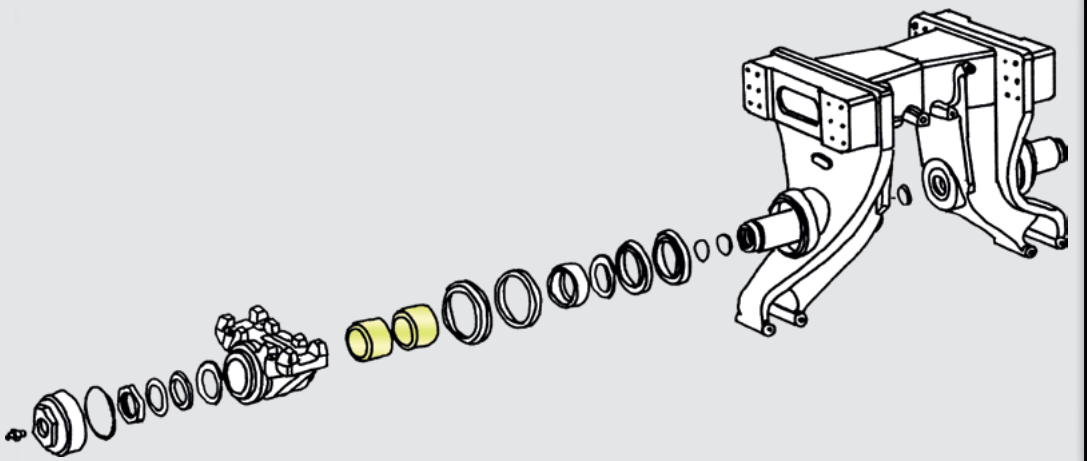

Dimensions:
Ø 110 mm
Ø 115 mm
S = 2,5 mm
Height: 80 mm

LPGRS	08/2016→
GPR	04/2004→
94 - 164	06/1995 - 12/2004
93 - 143	1987 - 1996

BT 201	21/26 tn
BT 300	21/26/30/32 tn
BT 301	21/26/30/32 tn

312740

Support shaft → BT 300

ScR **1398067**

Material:
- Steel
- 42 CrMo

Length: 485 mm



kg 25,4

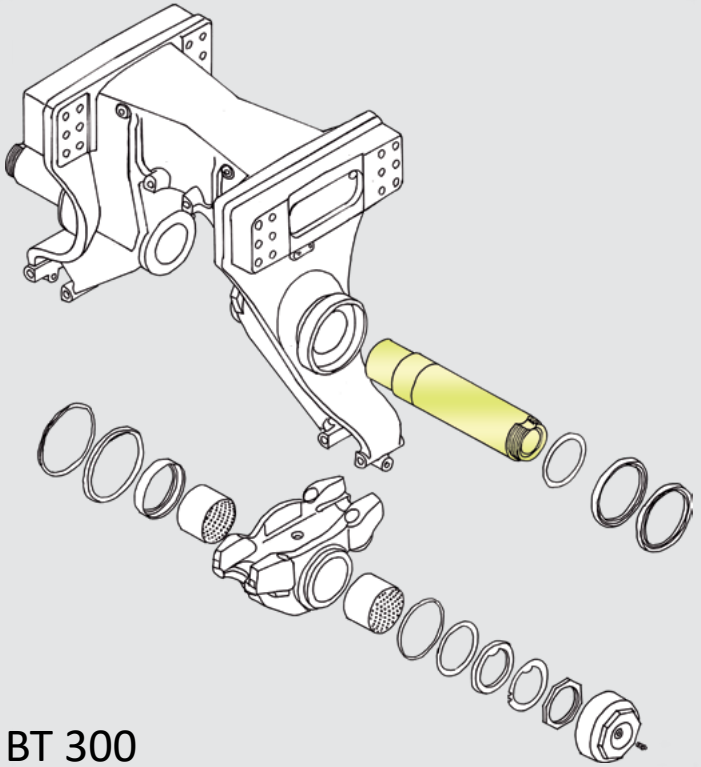

BT 300

LPGRS	08/2016 →	BT 300 B/I
GPR	04/2004 - 2018	BT 300
94 - 164	06/1995 - 12/2004	BT 300

312746

Support shaft → BT 301

ScR **1928803**

Length: 485 mm

Material:
- Steel
- 42 CrMo

M95 x 2



kg 25,2

LPGRS 08/2016 → BT 301 B, BT 301 I/S
GPR 04/2004 - 2018 BT 301, BT 301 I/S

94 - 164

BT 400

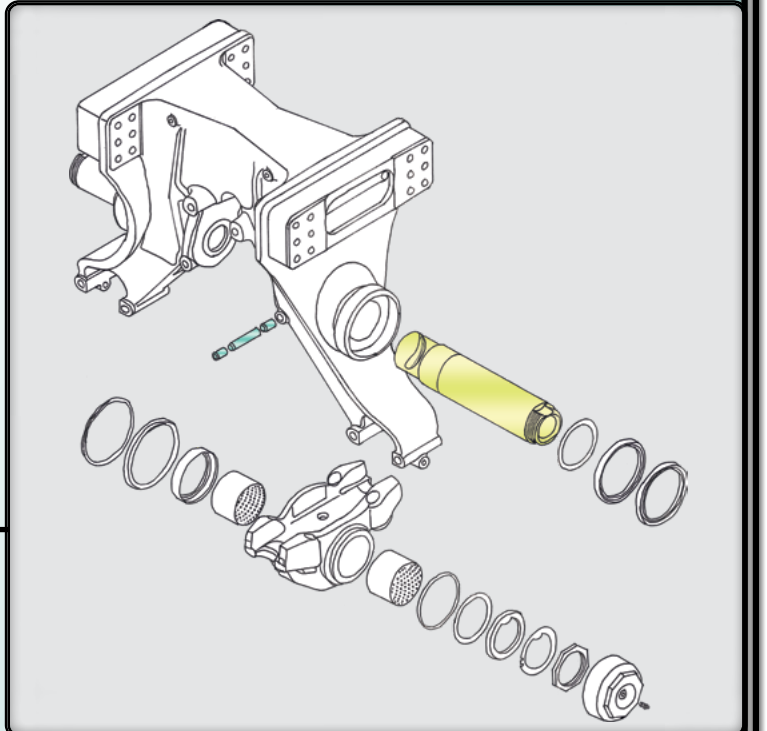

312742

Locking pin kit

ScR
803628
1928804

Material:
- Steel

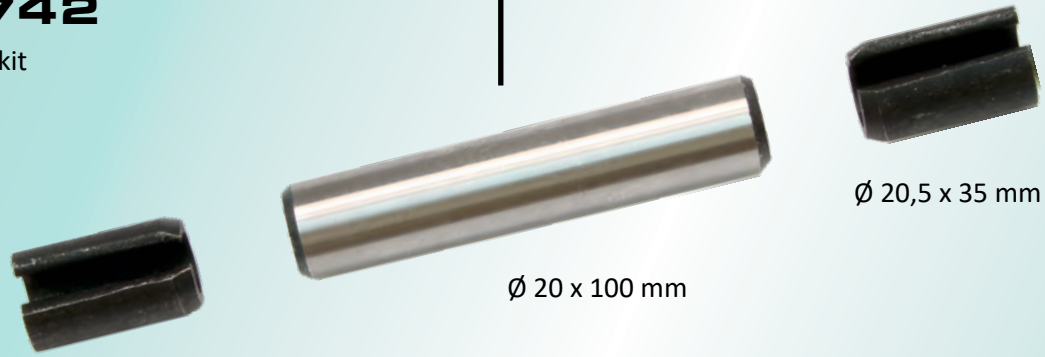

kg 0,35

LPGRS 08/2016 → BT 301, BT 400
GPR 04/2004 - 2018 BT 301, BT 400

94 - 164

312709

Wear ring → Cradle

Ø ID: 115,5 / 132,0 mm
Ø OD: 140,0 mm
Height: 28,0 mm

ScR **1367303**

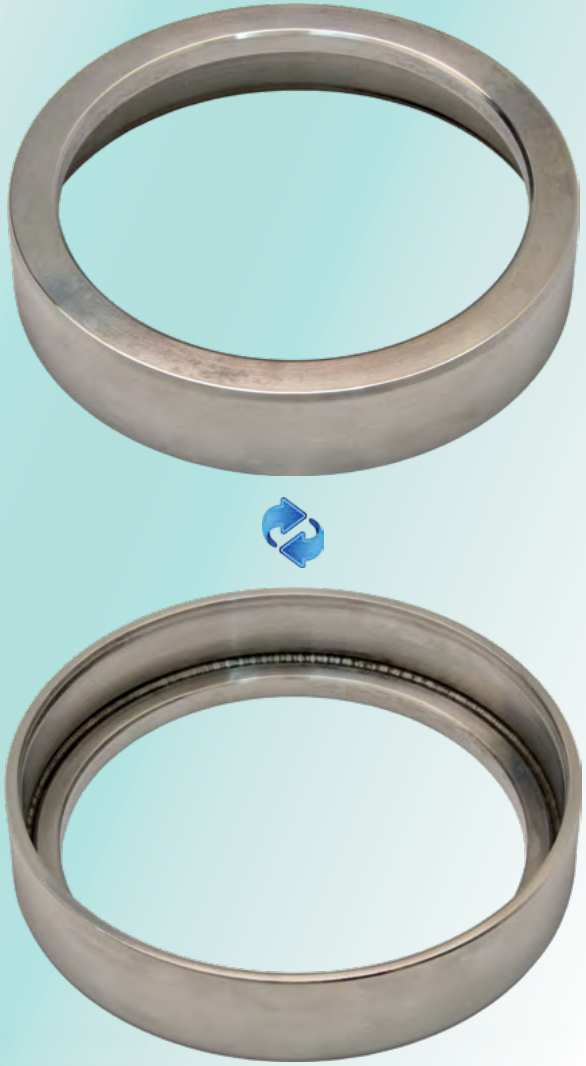

kg 0,56

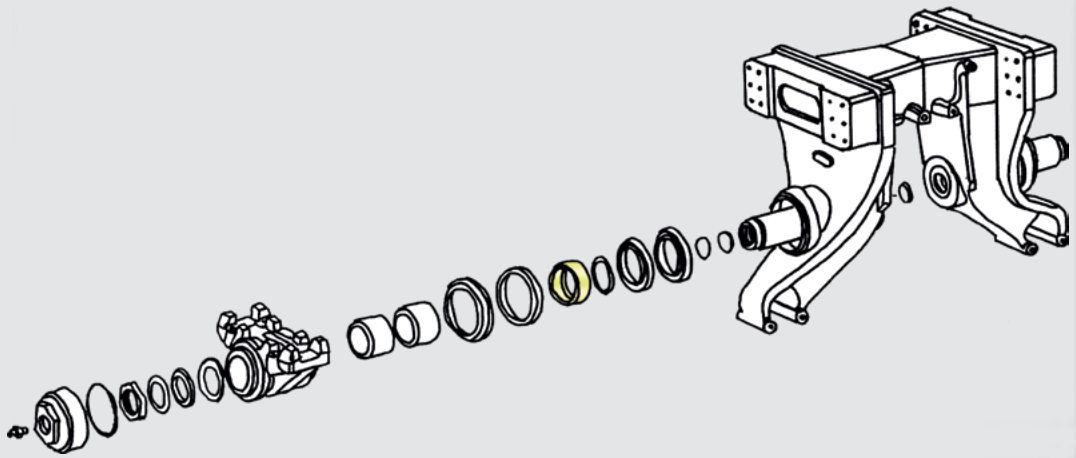

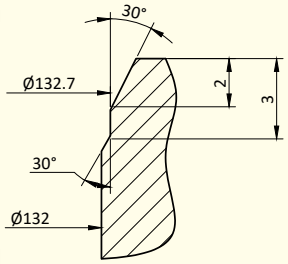

LPGRS	08/2016 →
GPR	2004 - 2018
94 - 164	1994 - 2008

BT201, BT300, BT301, BT400

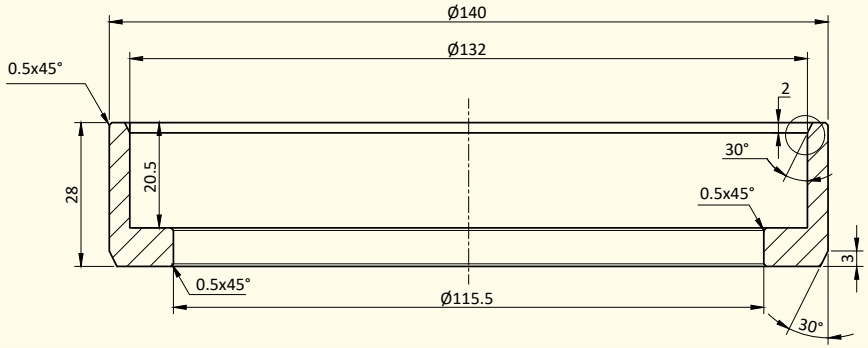

312780

Dowel with spring pin → Balance tandem axle

ScR

1320289
1379667

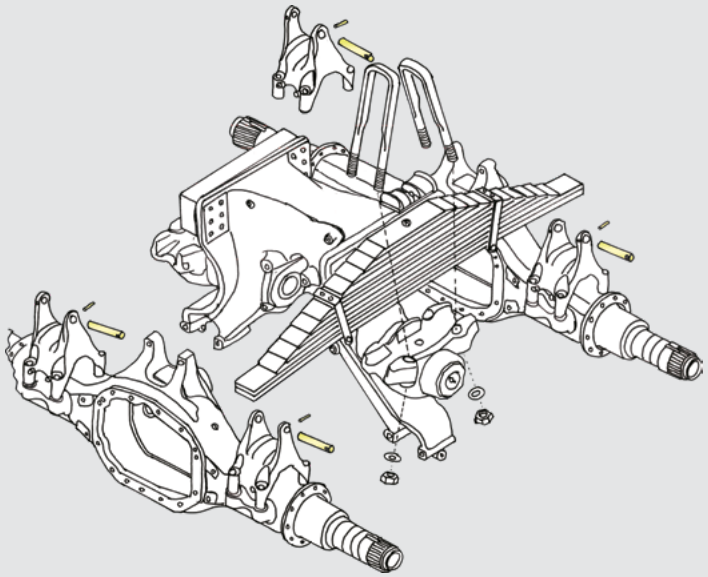

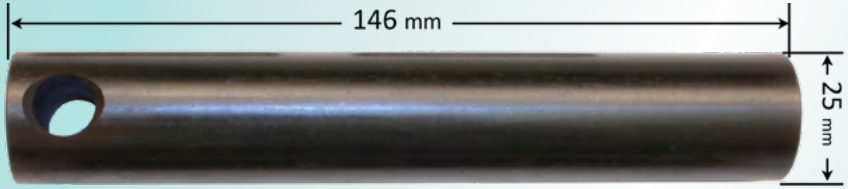

Dowel:
Length: 146 mm
Outer Ø 25 mm
Hole Ø 11 mm



Spring pin:
Length: 50 mm
Outer Ø 8,5 mm
Inner Ø 5,5 mm

LPGRS	2016 →
GPR	2004 - 2018
94 - 164	1994 - 2008
93 - 143	1987 - 1996

kg 0,56

312198

Throughput shaft kit

ScR

1485733 x 1
816075 x 2
1503168 x 2

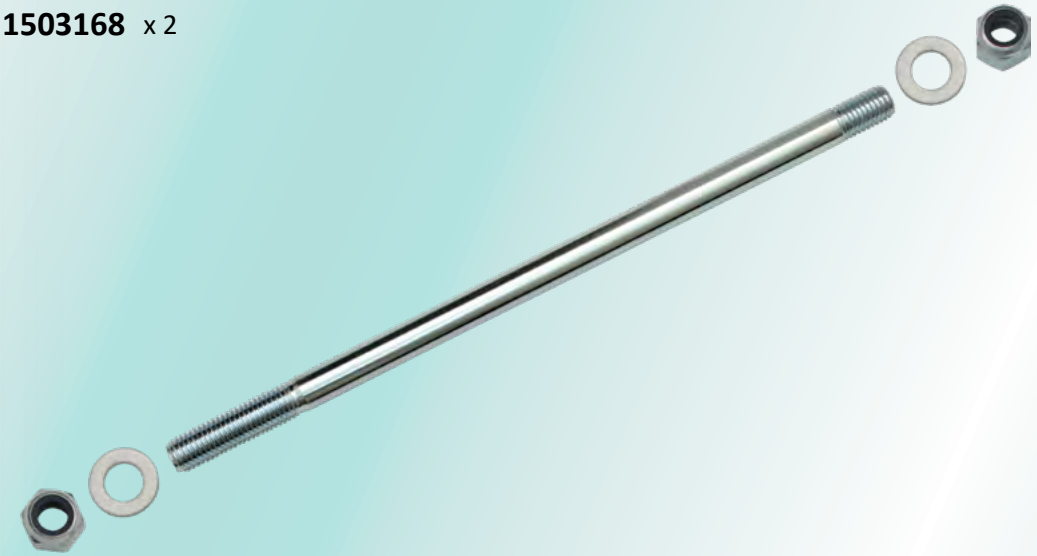

kg 0,88

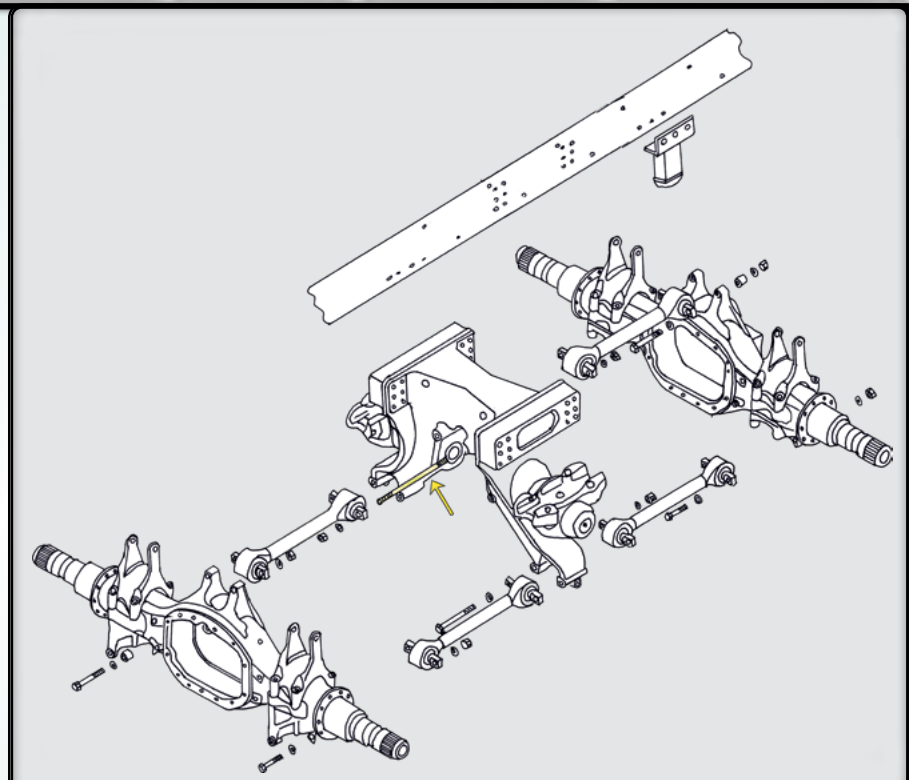

White zinc coated

Total length: 395 mm

Threads: M18 x 2,5 mm

Tensile Strength: 10.9

2 / BT 300, BT 201

LPGRS	08/2016 →
GPR	2004 - 2018
94 - 164	1994 - 2008

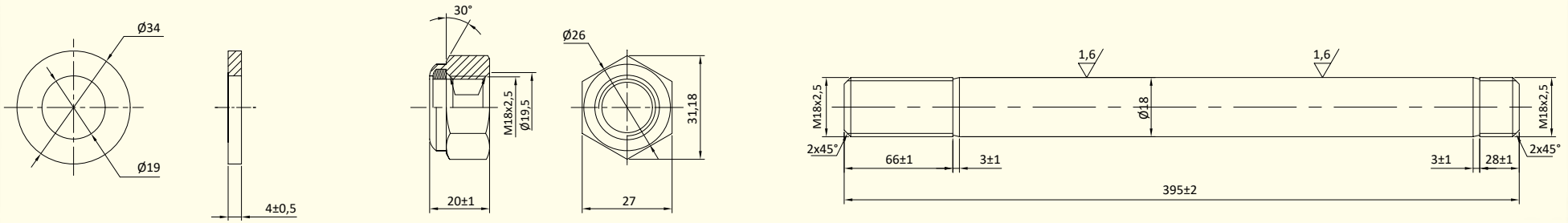

312195

Throughput shaft kit

ScR

1948837 x 1
1948839 x 2
1378840 x 2

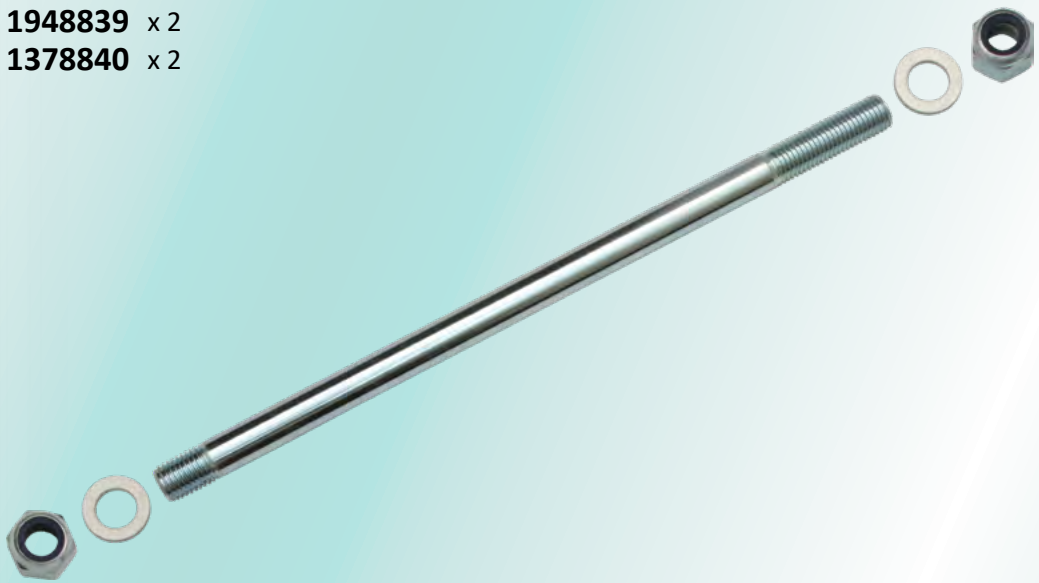

kg 1,14

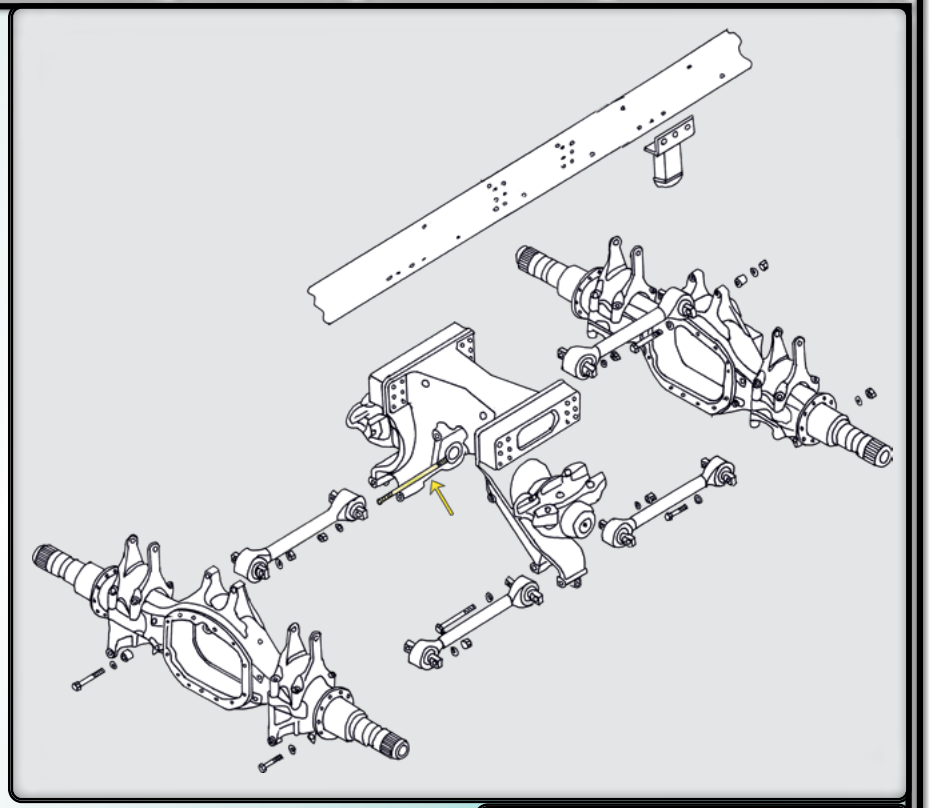

White zinc coated

Total length: 410 mm

Threads: M20 x 2,5 mm

Tensile Strength: 10.9

2 /

BT 301
BT 400

LPGRS 08/2016 →
GPR 2004 - 2018

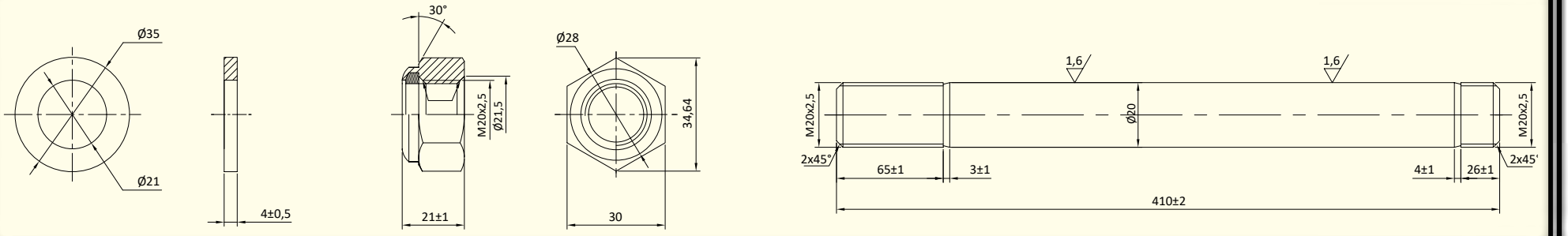

312782

Clamp pad → U-bolt / Leaf spring

ScR **1395828**

Material:
Cast iron



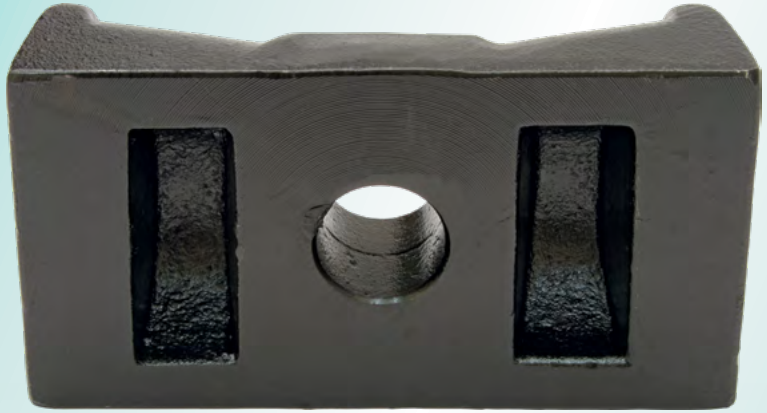

kg 3,44

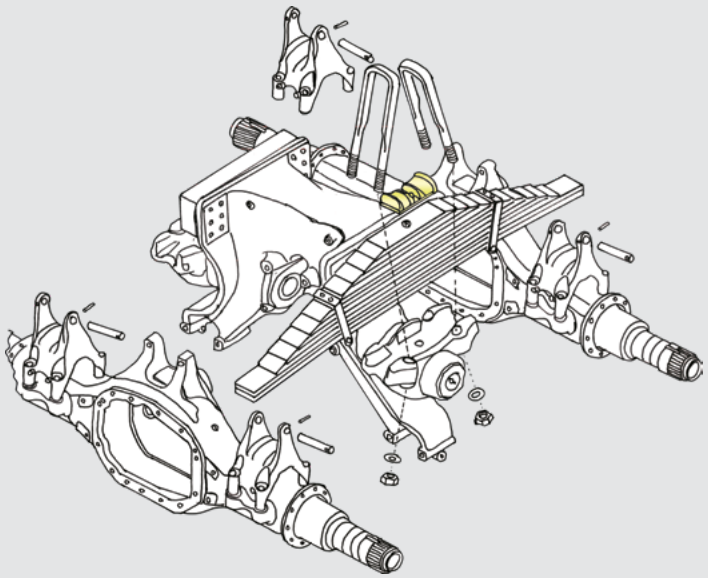

LPGRS	BT 300/301	08/2016 →
GPR	BT 300/301	04/2004 - 2018
94 - 164	BT 300/301	06/1995 - 12/2004

313010

Air valve → adjustable steering column tilt lock

ScR

2185839
1797971
1485066

Material: Plastic



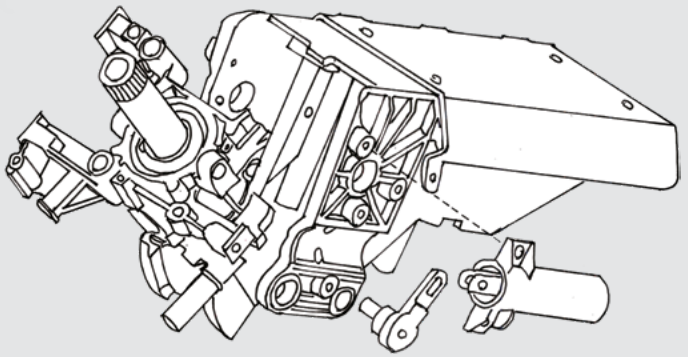

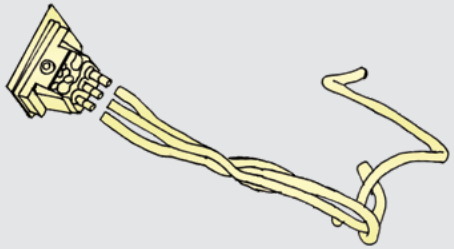

GPR		04/2004 - 2018	
KN		11/2005 →	



kg 0,16

313003

Steering shaft 860 → 1280 mm, previous design

ScR
2812444
1784690
1541653 **HD** = Previous design 2-boots
1540426
1490913
1489734
1480783
1462613
1439270
1403329
1377650



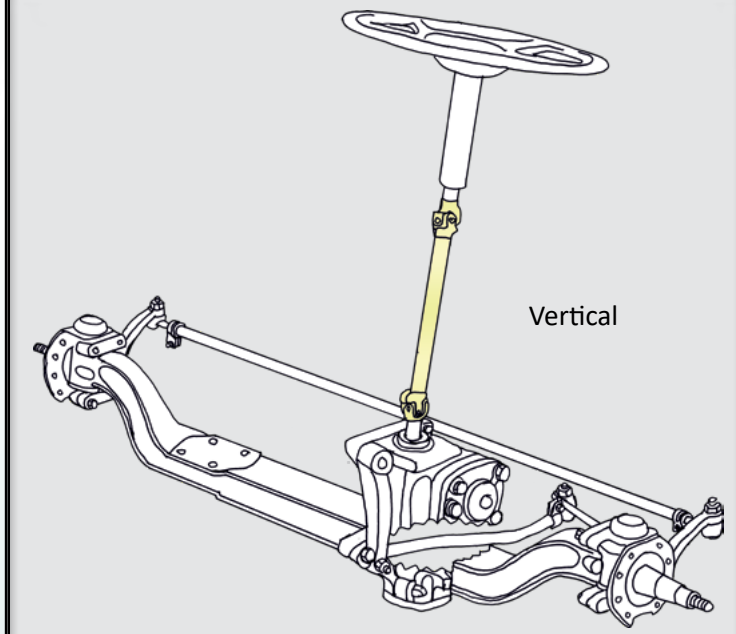

Length:
Manufacturer´s info: 860 → 1280 mm
Scania info: 775 → 1220 mm

kg 3,91

GPR	2004 - 2018
94 - 164	1994 - 2008

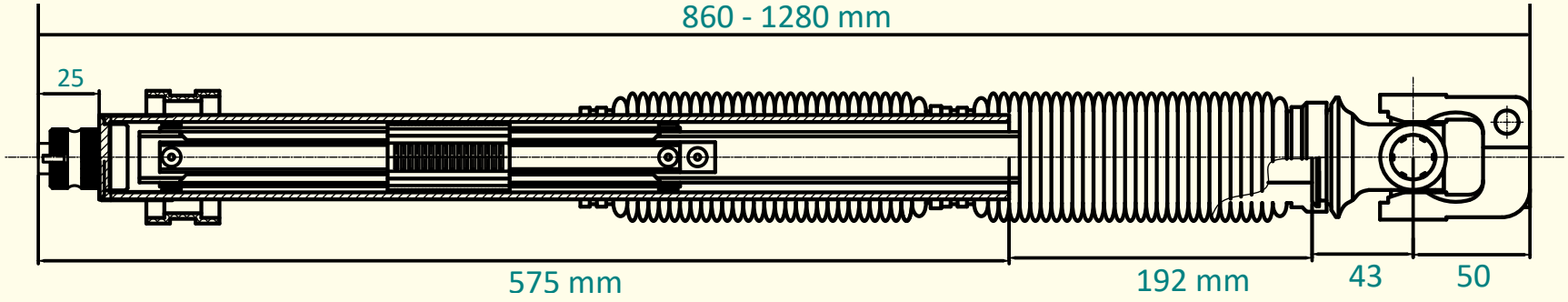

313005

Steering shaft 655 → 1010 mm, previous design

ScR

2812444
1784690 **HD** = Previous design
1541653
1540426
1480783

2812386
2556855
1784689
1540425 **HD** = Previous design
2159933
1543014
1490912
1491834
1462612
1439269
1403326
1377649

Length:
Manufacturer´s info: 655 → 1010 mm
Scania info: 586 → 950 mm

kg 3,34

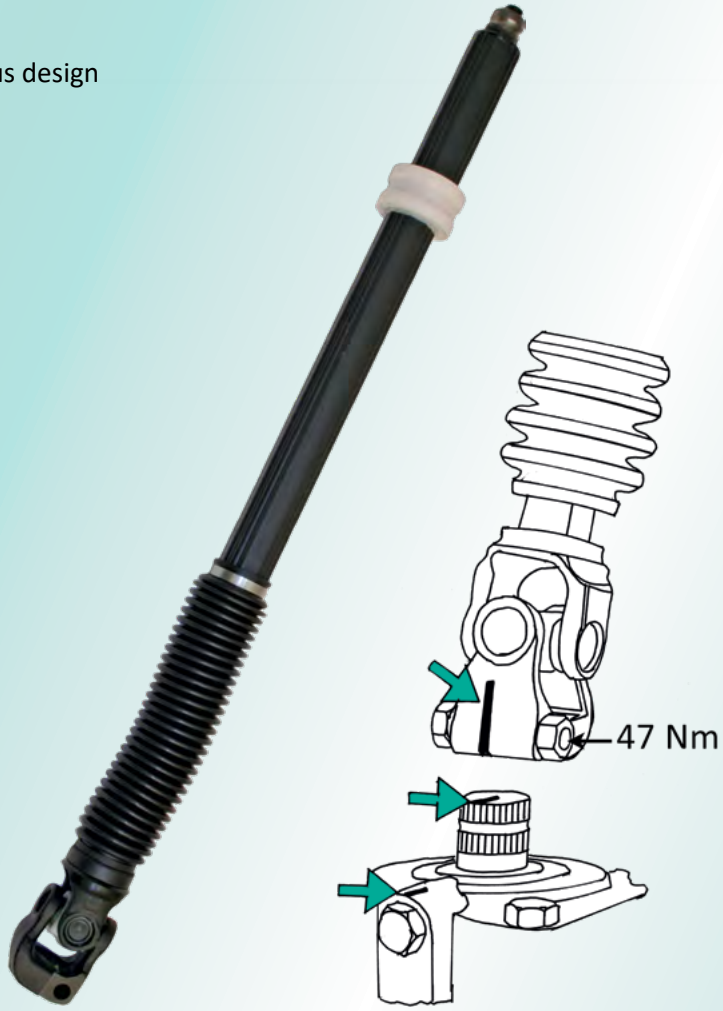

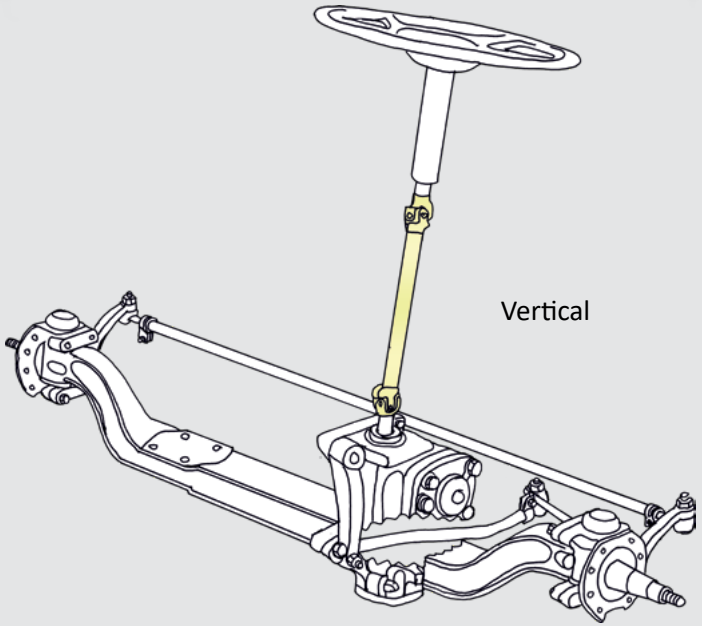

GPR	2004 - 2018
94 - 164	1994 - 2008

KN	2004 →
94, 114, 124	1997 - 2010

With overhang:
1900, 2075, 2275, 2463, 2500, 2700

Driver stand height:
Z0 - 102, Z0 - 325, Z0 + 205, Z0 + 225

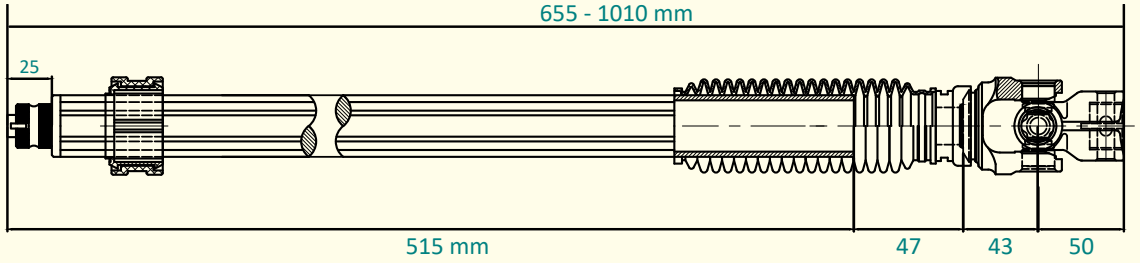

313243

Repair kit for bracket

ScR -

ScR 801992
M06 x 20 mm



ScR 802996
Ø 6,5 mm



ScR 804710
NBR 54,5 x 3,0 mm





ScR 1528185
Material: Plastic



ScR 1345205
V75 NBR

ScR 1345205
V75 NBR

HD 313240
ScR 1520607
55,3 x 60,0 x 69,3 mm
Steel & sintered with CuPb10Sn10 layer.

kg 0,22



ScR 804664
NBR 29,2 x 3,0 mm

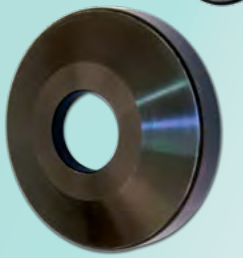

ScR 1375227
Material: Steel

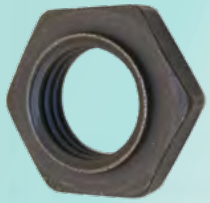

ScR 1345206
M30 x 3,5 mm
← Nut has to be replaced every time it is opened.

kg 0,83

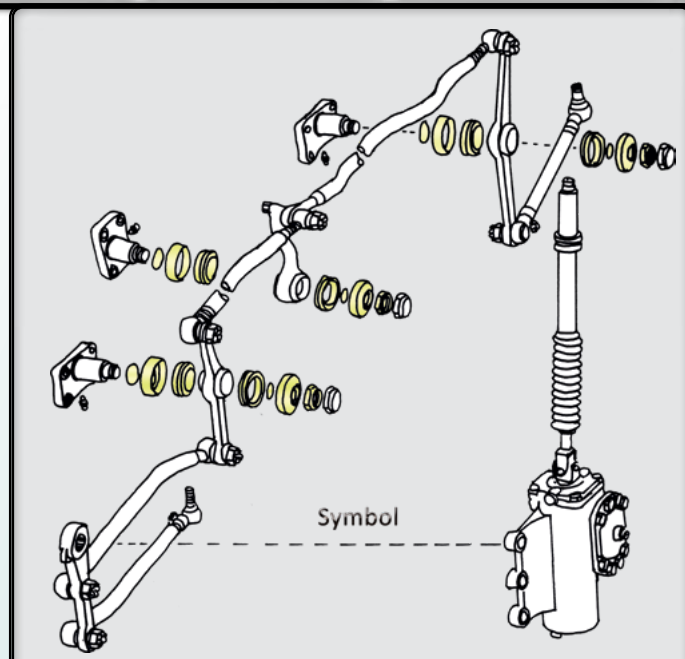

GPR 04/2004 - 2018
94 - 164 06/1995 - 12/2004
93 - 143

313245

Bracket assembly

ScR
1786130
1515668
486488
1782335
1403261
1375220

ScR 801992
M06 x 20 mm



ScR 802996
Ø 6,5 mm



ScR 804710
NBR 54,5 x 3,0 mm





ScR 1528185
Material: Plastic



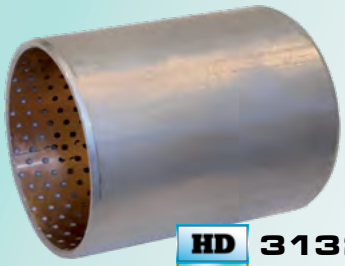



ScR 1345205
V75 NBR

ScR 1345205
V75 NBR

HD 313240
ScR 1520607
55,3 x 60,0 x 69,3 mm
Steel & sintered with CuPb10Sn10 layer.

kg 0,22



ScR 804664
NBR 29,2 x 3,0 mm

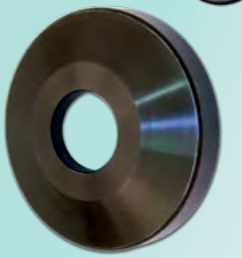

ScR 1375227
Material: Steel

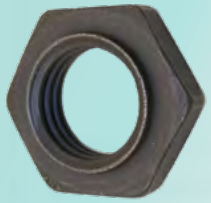

ScR 1345206
M30 x 3,5 mm
← Nut has to be replaced every time it is opened.

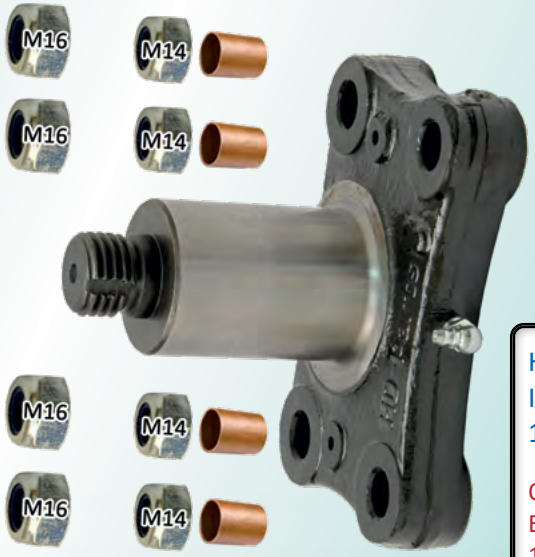

kg 5,61

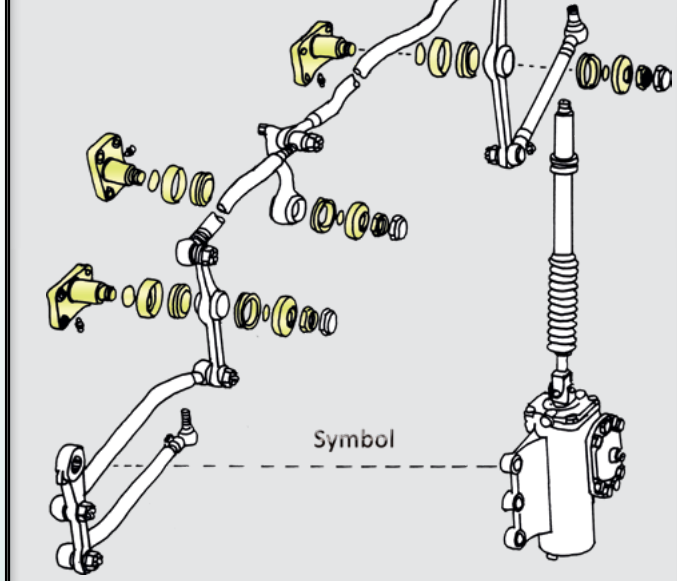

GPR	04/2004 - 2018
94 - 164	06/1995 - 12/2004
93 - 143	⛔
🚌	⛔

Holes and lock nuts are for 16 mm bolts.
If you have M14 bolts, use included
16 → 14 mm adapters and 14 mm lock nuts.

Отверстия и самоконтрящиеся гайки для 16 мм болтов.
Если у вас M14 болты, используйте входящие в комплект
16 → 14 адаптеры и 14 мм самоконтрящиеся гайки.

313228

Special installation kit → Steering drop arm & drag link

ScR

1405354	Special shaft	M20 x 2,5 x 164 mm
1405316	Side plate	21 x 60 x 3 mm
803010	Side plate	21 x 36 x 3 mm
389226	Crown locker	M20 x 2,5 mm
805456	Cotter pin	4 x 40 mm

This kit is HD´s own creation.
Reference numbers are for individual parts.

Material: Steel





kg 0,63

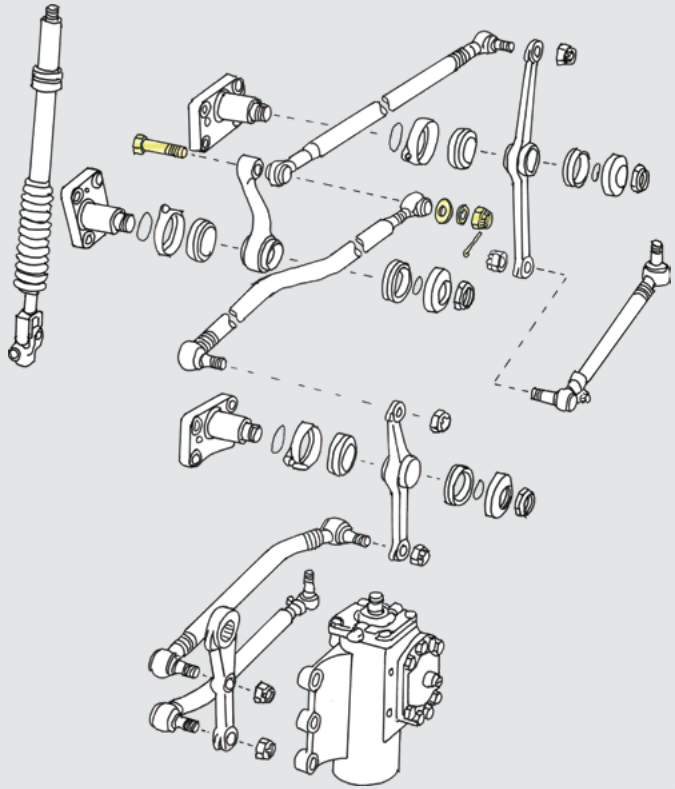

GPR	2004 - 2018
94 - 164	1994 - 2008
93 - 143	1987 - 1996

This part is designed to replace the OE part and is used exclusively in the Scania steering system and it is equipped with special dimensions.

This part is nor a general use spare part and it is not in accordance with DIN or any other standard.

This steering spare part can´t be replaced by generic parts.

316006

Sensor → Outdoor temperature

ScR **1100799**

Material: Plastic



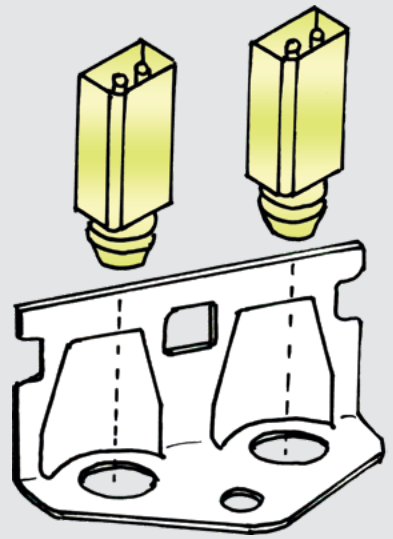

GPR	04/2004 - 2018
94 - 164	05/1995 - 12/2004

KN	11/2005→
94, 114, 124	10/1997 - 11/2006
T27, T163, T611	

kg 0,03

316046

Relay

Cover material plastic
-40°C → +85°C

5 terminal:
5 x 6,3 mm

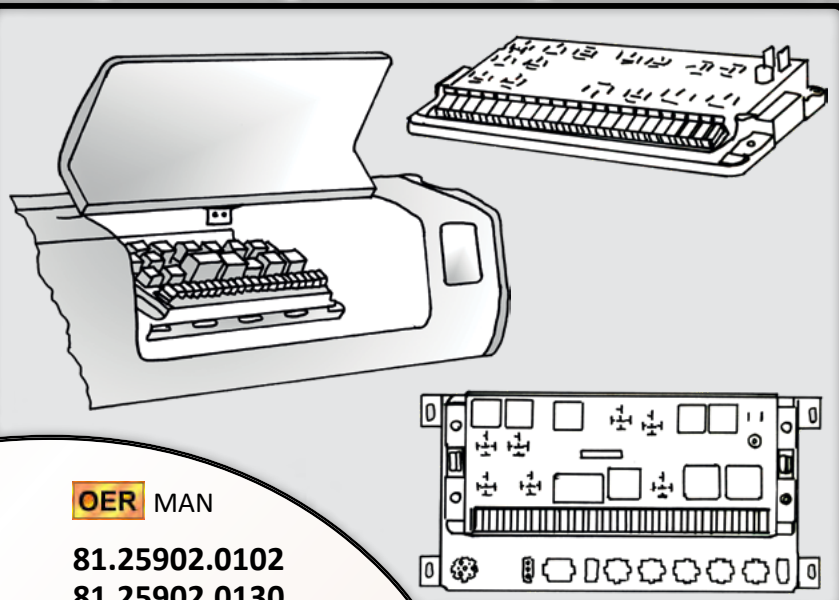



ScR

2077837
1431781
1391322
400782
243879
243460
235942
235940

VoR

21244697
20374662
3171420

OER DAF

0095464
0267701
0515912
1193310
1523983
1670140
1745069

OER Renault

50 10 589 426

OER Bosch (20 A)

0 986 AH0 615
0 332 204 202

OER Iveco

0 4206 9397
0 4209 6498
0 0951 5912
0 9943 8605

OER MB

000 545 5405
000 545 8405
000 545 8485
001 531 0260
003 544 8032

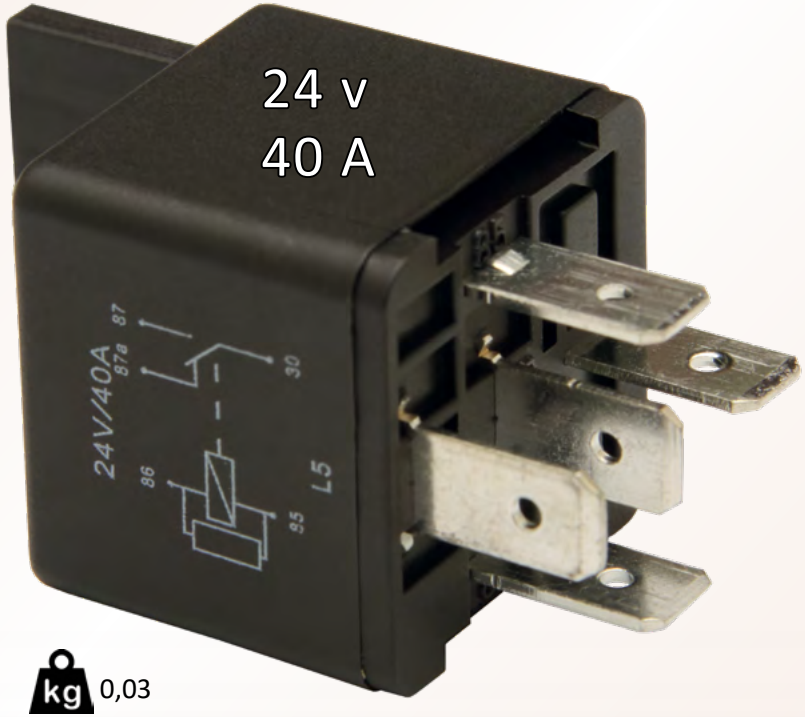

kg 0,03

OER MAN

81.25902.0102
81.25902.0130
81.25902.0132
81.25902.0137
81.25902.0159
81.25902.0164
81.25902.0167
81.25902.0168
81.25902.0171
81.25902.0201
81.25902.0202
81.25902.0229
81.25902.0248
81.25902.0249
81.25902.0364
81.25902.0429
81.25902.0431
81.25902.0435
81.25902.0460
81.25902.0474
81.25902.6233

LPGRS	08/2016→
GPR	04/2004 - 2018
94 - 164	06/1995 - 12/2004
93 - 143	1988 - 1995
82 - 142	1980 - 1988

KN

94, 114, 124
93, 113
82, 92, 112

→ Scania, Volvo, Renault, Man, Iveco, DAF and many others.

316035

Relay

Cover material plastic
-40°C → +85°C

4 terminal:
2 x 9,5 mm
2 x 6,3 mm

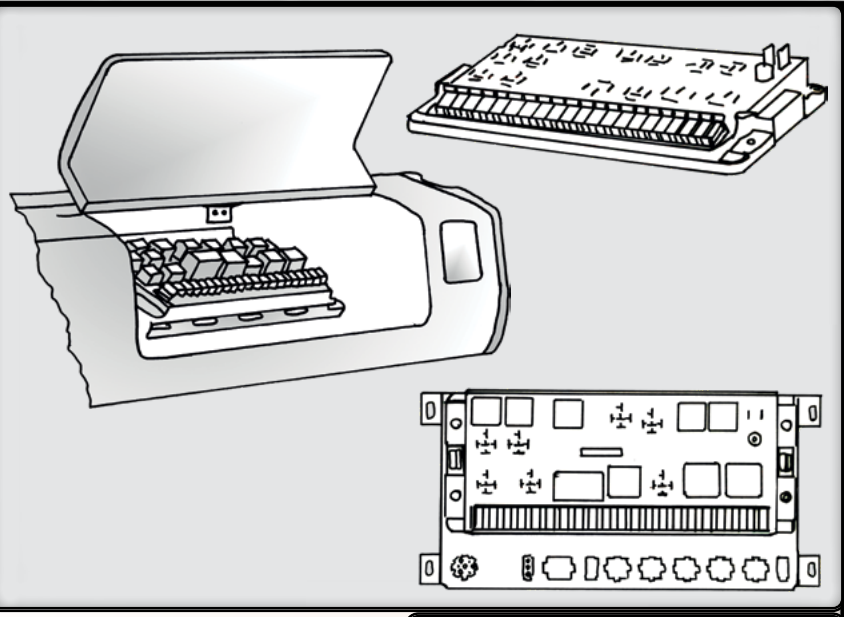



ScR

2420827
1543731
1439172
1407909
303535

VoR

21255974
20390648

OER Renault

50 10 589 425
50 00 787 913

OER DAF

1880377
1669972

OER MB

364 542 7319

OER MAN

81.25902.0264
81.25902.0317
81.25902.0363
81.25902.0425
81.25902.0452
81.25902.0491
81.25902.0519
81.25902.0520

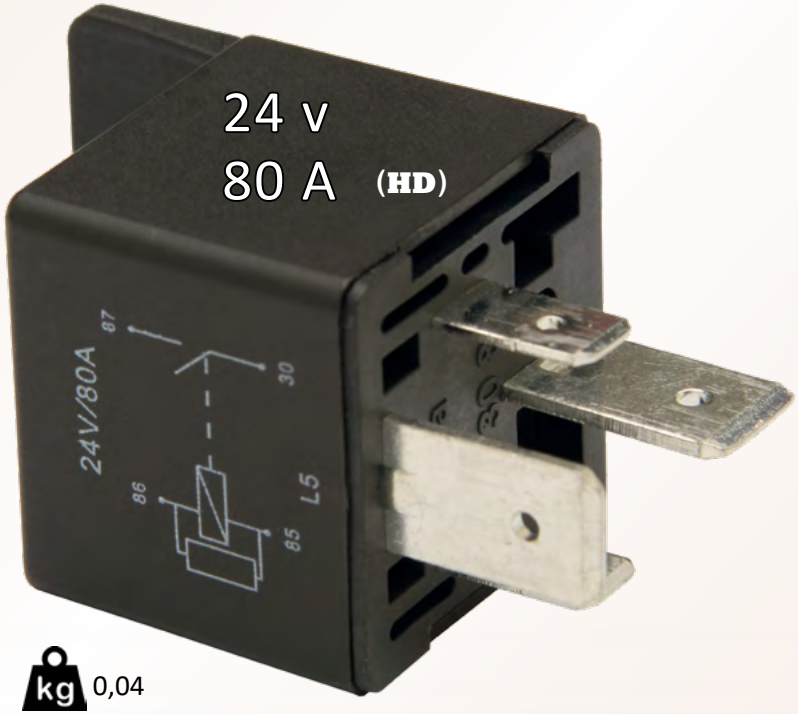

kg 0,04

LPGRS	08/2016→
GPR	04/2004 - 2018
94 - 164	06/1995 - 12/2004
93 - 143	1988 - 1995
82 - 142	1980 - 1988

KN

94, 114, 124
93, 113
82, 92, 112

→ Scania, Volvo, Renault, Man, Iveco, DAF and many others.

316140

Start motor 24 v / 5,5 kw

ScR	REM	BOSCH Reference		
2276131	**573507**	**0 001 261 028**	6605552→	09/2009→
2031368	**579271**	**0 001 261 026**	6605552→	09/2009→
1796026	**579265**	**0 001 261 002**	→6605551	→09/2009
1447911	**579265**	**0 001 241 001**	→6605551	→09/2009

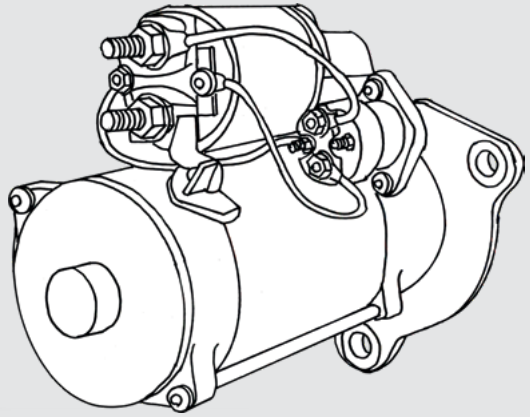

Reference numbers:

Mitsubishi **M90R3545SE**

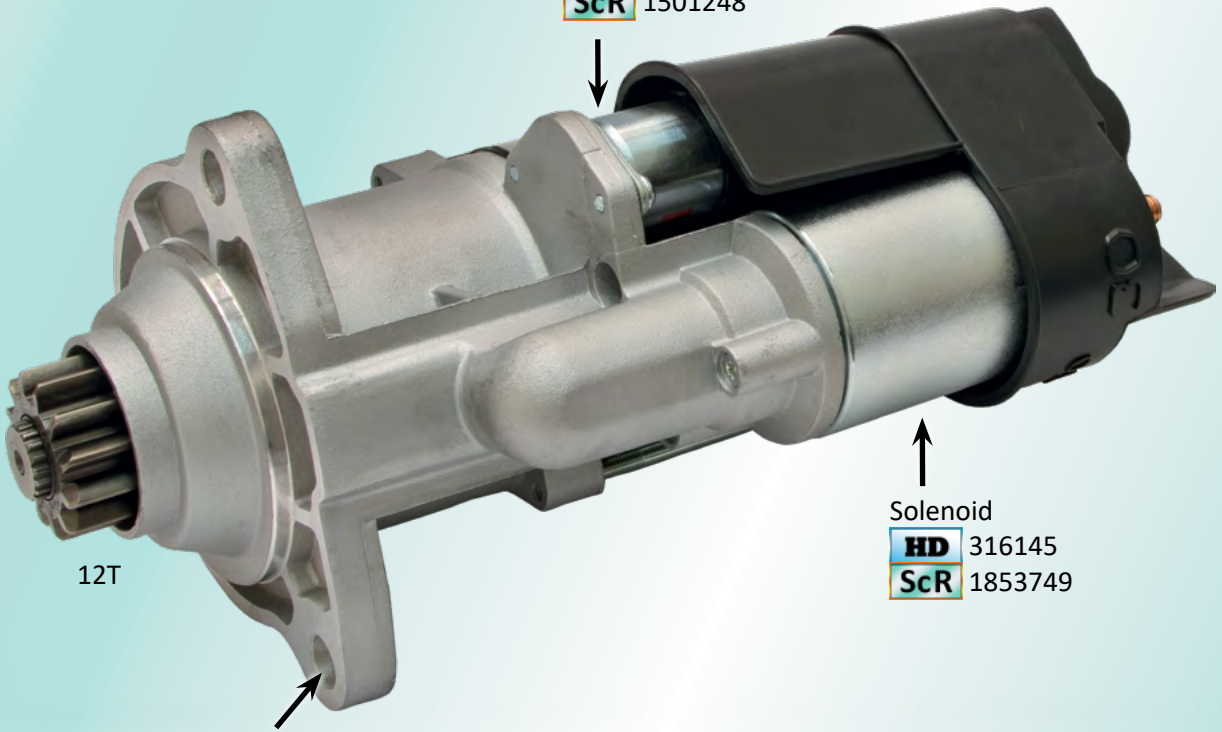

GPRS	9, 13	08/2016→
GPR	9, 11, 12, 13	04/2004 - 2018
94 - 124	9, 11, 12	09/1995 - 12/2004

KN	9, 11, 12, 13	11/2005→
94, 114, 124	9, 11, 12	10/1997 - 11/2006

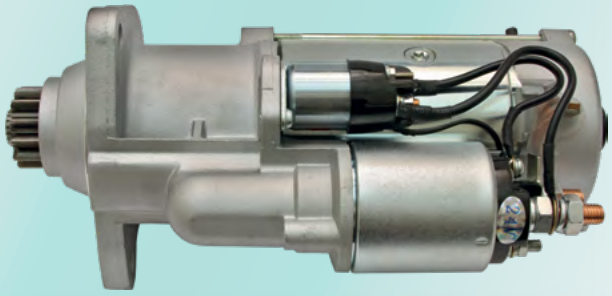

kg 10,03

Each start motor has been tested by the manufacturer before delivery.

316147

Relay 24 v



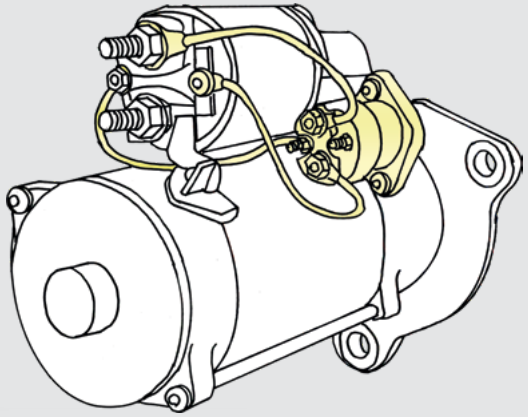

ScR	BOSCH Reference
1501248	6033AD5139

→6605551 →09/2009

→8139953

→	ScR	HD
	1796026 1447911	316140 all

ScR	2246453 (kit)
ScR	2194995

6605552→ 09/2009→

8139954→

→	ScR	HD
	2276131 2031368	316140



MBR 001 152 2410

DAF R 1337453 1354515

Reference numbers:

DT 463012

kg 0,24

GPRS	9, 13	08/2016 →
GPR	9, 11, 12, 13	04/2004 - 2018
94 - 124	9, 11, 12	06/1995 - 12/2004

KN	9, 11, 12, 13	11/2005→
94, 114, 124	9, 11, 12	10/1997 - 11/2006

Mercedes

Actros, Antos, Arocs, Axor

OM 501 LA OM 502 LA

DAF

XF 95, CF 85

316930

Thong

ScR

2141714
1529552
366595



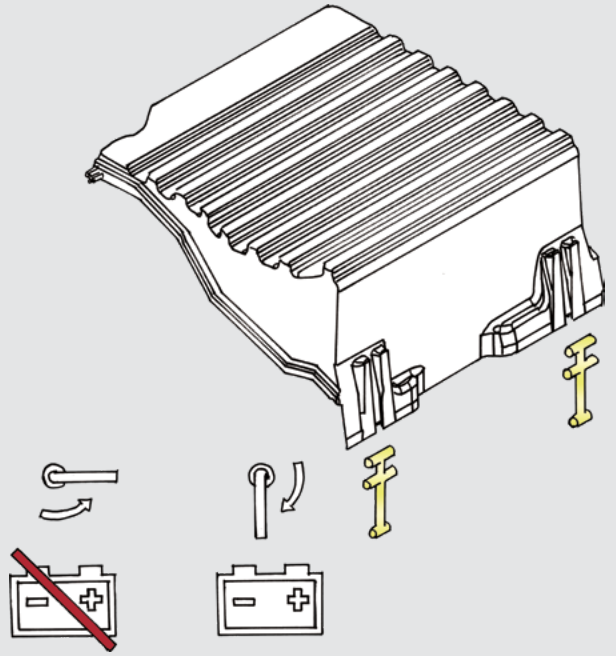

kg 0,06

GPR	04/2004 - 2018
94 - 164	06/1995 - 12/2004

→ Several different battery covers

316900

Battery box

ScR

2140666
1485946

Material: Cold rolled steel
Surface: Plastic spray
Sheet thickness: Same as OE

140 / 175 / 180 / 220 / 225 Ah

GPR 2004 - 2018

94 - 164 1995 - 2004

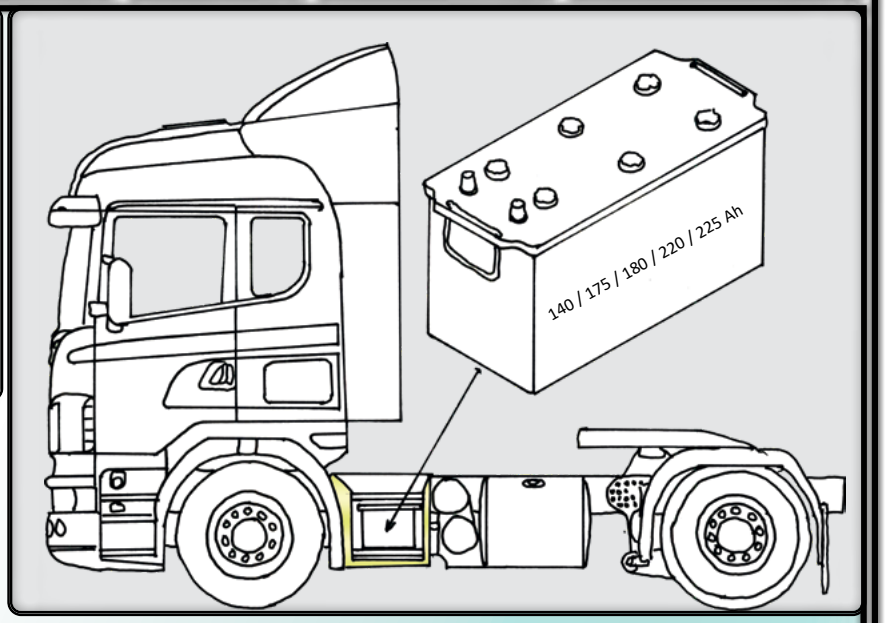

ScR 1350440
I.D. Ø 18,5-20 mm

ScR 1350441
I.D. Ø 12,5 - 15 mm





kg 17,8

316370

Pneumatic sensor valve

ScR

2038653
1536304
1421322
1340231
303470

Herion reference

9041010.3740.024.00
9041010.3735.024.00
9302016.0737.024.00



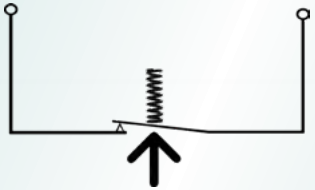

← **316390**
Connector



kg 0,44

Valve HD 316370 can be replaced by valve HD 316380
with Bayonet style Connector DIN72585 HD 317032



GPR 04/2004 - 2018
94 - 164 06/1995 - 12/2004

- 05 Air pressure transmission 890 / 900 / 920
- 12 Air suspension
- 10 Relay valve rear axle
- 10 Quick exhaust valve front axle
- 08 Differential lock leaf spring
- 03 Fuel valve when double tank
- 03 Manifold fitting
- 05 Power take off

KN 11/2005→

- 18 Door valve
- 05 Air pressure parts transmission

94, 114, 124 10/1997 - 11/2006

- 18 Door valve
- 14 Accelerator pedal

316380

Pneumatic sensor valve

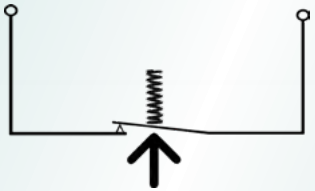

ScR

2038655
1376794

Herion reference

9041011.3745.024

VoR **1078316**

Herion reference

9041025.3746.024



Use: 1, 3

Suitable bayonet connector:
HD **317032**



DIN 72585-A1



kg 0,42

LPGRS 08/2016 →
GPR 04/2004 →

- 05 Air pressure transmission 890 / 900 / 920
- 05 Power takeoff transmission
- 08 Differential lock rear axle
- 10 Air brake several places

94 - 164 06/1995 - 12/2004

- 10 Quick exhaust valve front axle

KN 11/2005→

- 08 Differential lock rear axle
- 10 Pressure limiting valve
- 10 Instrument panel
- 13 Steering column adjust

316377

Pneumatic solenoid valve

ScR

1488083
1423566
1334037
1318860
1129759

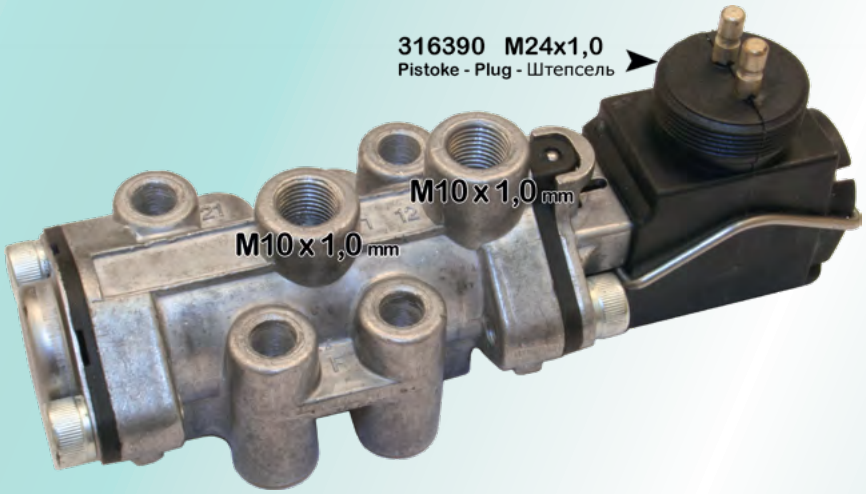

→ HD 305450 ScR 1345149
→ HD 305460 ScR 1484808

kg 0,34

1-2 /

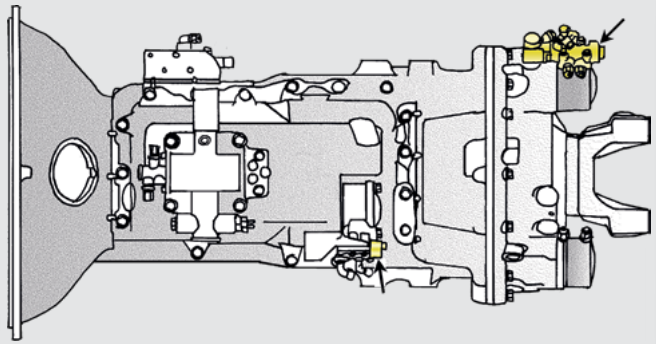

PR → 10/2006

94, 114, 124, 144, 164 06/1995 →

890, 900, 920

G

316378

ScR 1364636

kg 0,13

Coil kit

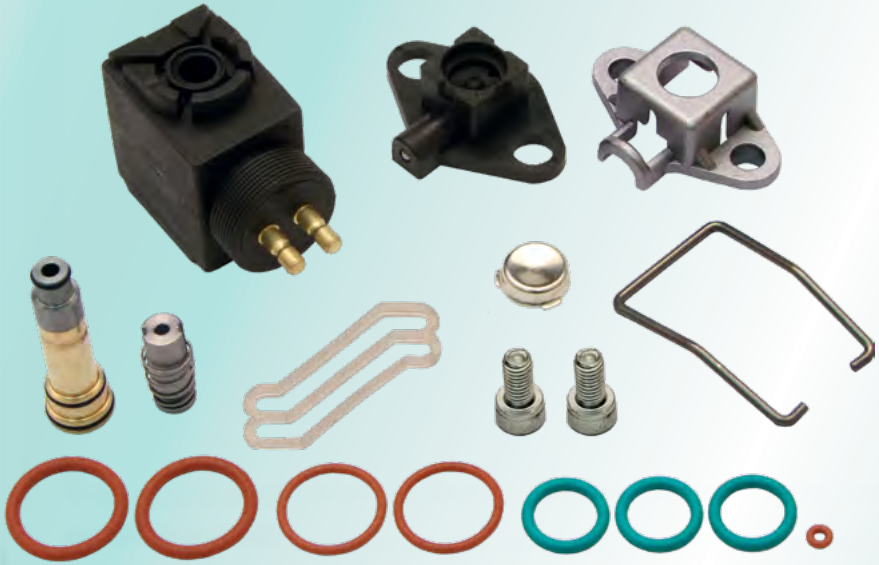

1-2 /

94, 114, 124

801

316372

Pneumatic solenoid valve (Model 2/2)

ScR	Herion reference
1536307	9012010.3740.024.00
1421325	9012010.3735.024.00
1370354	9207106.0737.024.00
305470	

Virran kytkeytyessä venttiili 316372 katkaisee paineilman kulun eikä päästä poistoilmaa ulos.

When current is engaged, valve 316372 will shut the compressed air and will not release the air from the system.

При подаче питания, клапан 316372 прерывает поток сжатого воздуха и не выпускает воздух наружу.





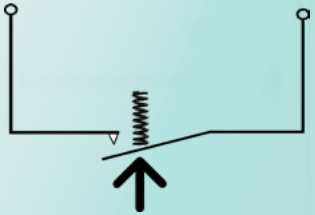

kg 0,45

316373

Pneumatic solenoid valve (Model 3/2)

ScR	Herion reference
1536305	9042010.3740.024.00
1421323	9042010.3735.024.00
1340232	9302017.0737.024.00
312119	

Virran kytkeytyessä venttiili 316373 katkaisee paineilman kulun ja päästää poistoilman ulos.

When current is engaged, valve 316373 will shut the compressed air and also releases the air from the system.

При подаче питания, клапан 316373 прерывает поток сжатого воздуха и выпускает воздух наружу.



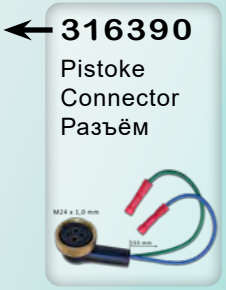

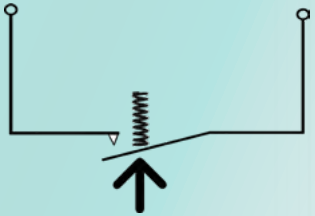

kg 0,47

316505

Cable harness kit

ScR

1732515
1467007
1385411



kg 0,11

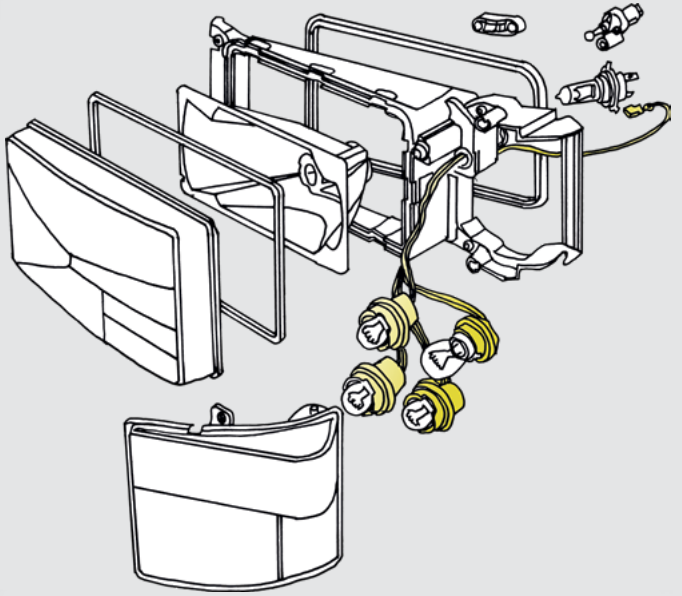

GPR 04/2004 - 2018

94, 114, 124, 144, 164

H4 - light system

2 /

316200

Battery master switch **24 v / 300 A**

ScR

2000391
1912756
1734479
1730031

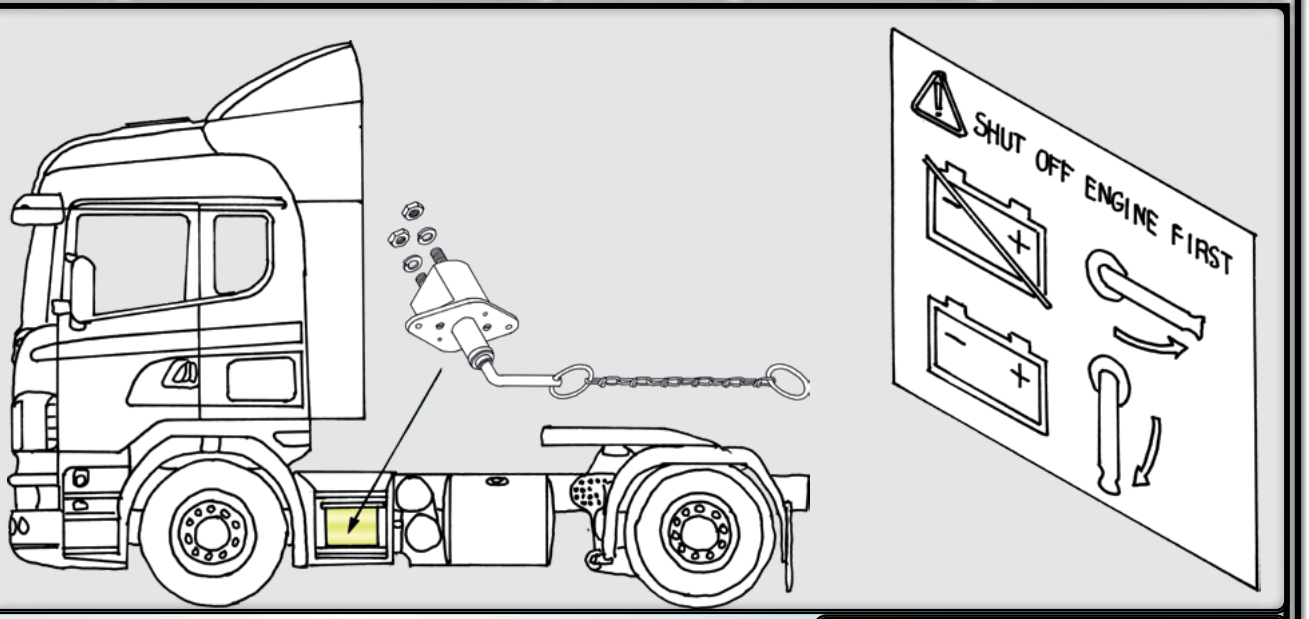

300 A
24 v

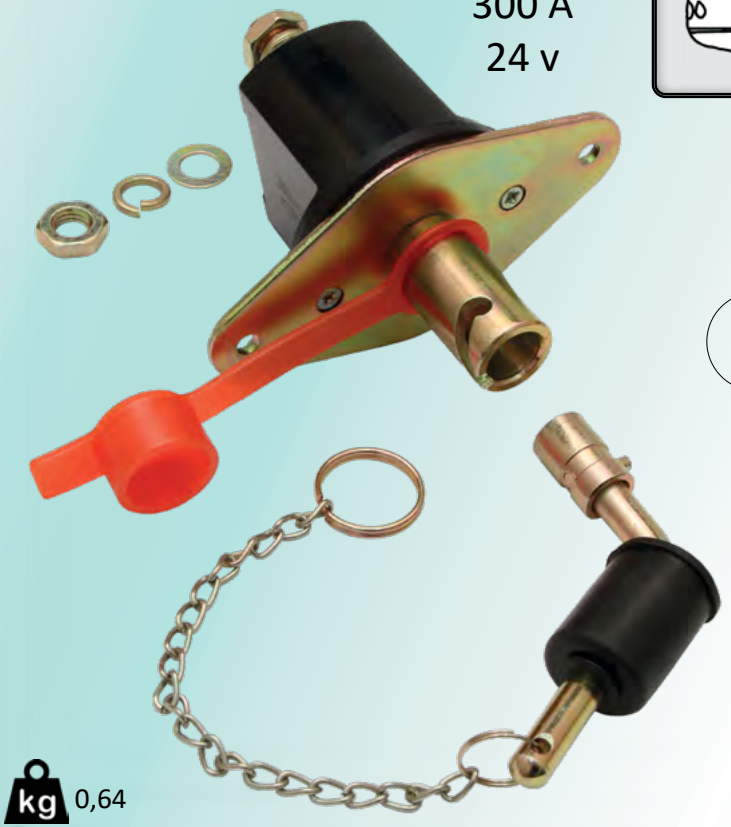

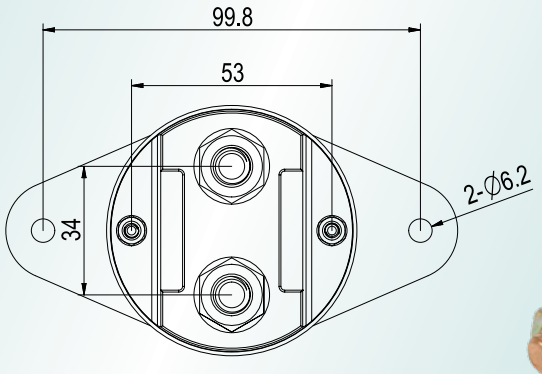

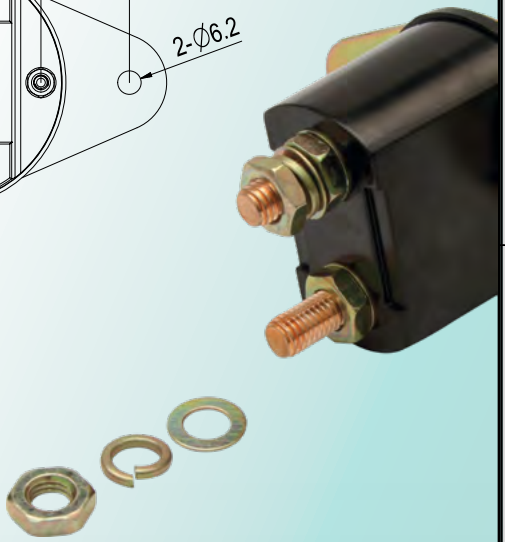

M10 x 1,5 mm

kg 0,64

GPR	04/2004 - 2018
94 - 164	05/1995 - 12/2004 SLA →11/2006
KN	11/2005→

316390

ScR 1378883

Plug connector

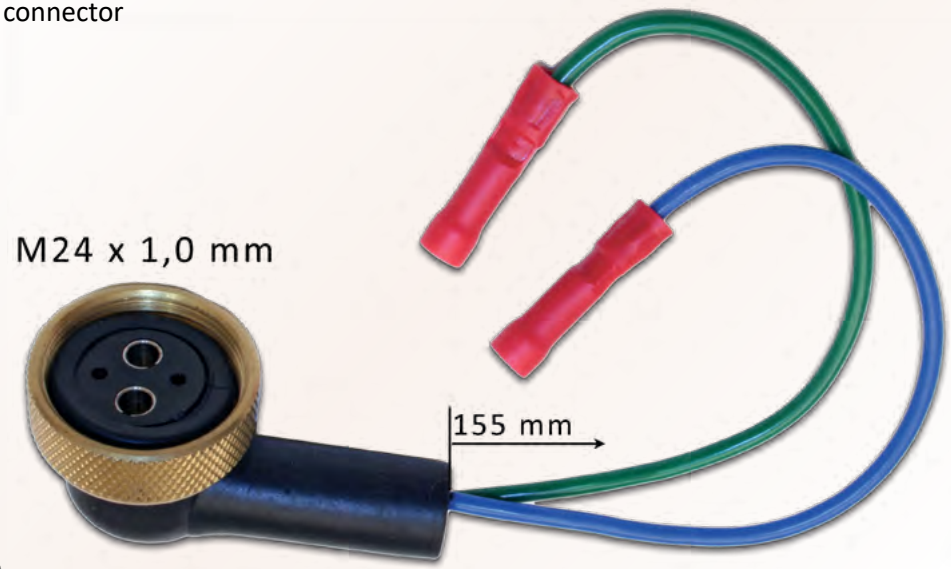

kg 0,04

316391

ScR 1378882

Plug connector

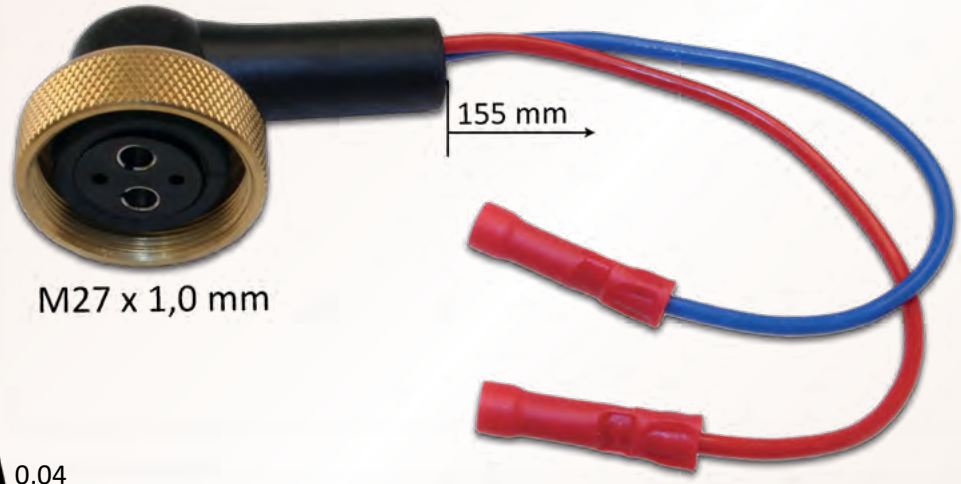

kg 0,04

Suits for Scania and Volvo to several locations



GPR	04/2004 - 2018
94 - 164	06/1995 - 12/2004
93 - 143	1987 - 1996
92 - 142	

KN	11/2005→
94, 114, 124	10/1997 - 11/2006
93, 113	
82, 92, 112	

317032

Bayonet connector

DIN 72585-A1

Universal design

This item is a universal connector that suits for several vehicle makes.

All four terminals are connected, so it can be used to replace pretty much any bayonet connector. Use the wires you need and cut or ignore the others.



Blue	120 mm
White	150 mm
Yellow	150 mm
Red	150 mm

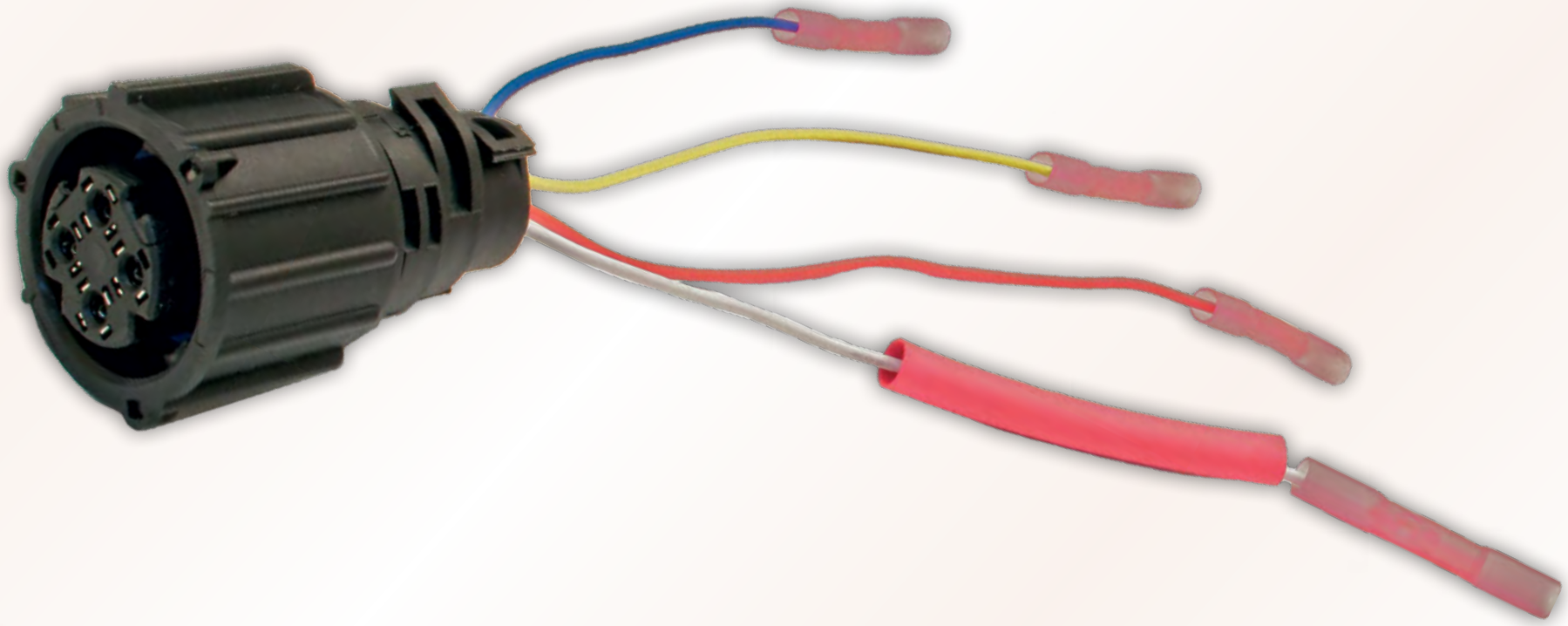

kg 0,04

316220

Bracket → End-outline marker lamp

ScR **1374897**

Dimensions:
483,15 x 103,5 x 74,79 mm

5 x Holes Ø 9,0 mm

4 x Nuts M10 x 1,5 mm

Material: Steel

Coating: Black paint

kg 0,55

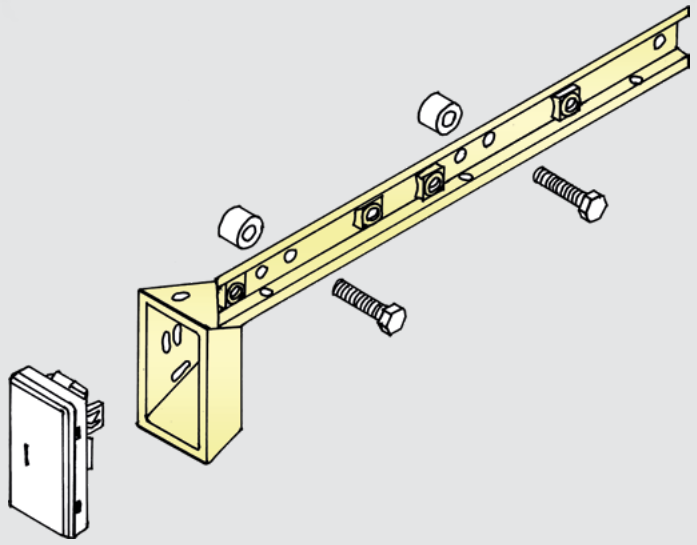

↑

ScR 2052119, 2080828 new
1471599, 1443884 old

LPGRS	08/2016 →
GPR	2004 - 2018
94 - 164	1994 - 2008

317073

Operating sensor



ScR

2033730 =
1472739 Sensor
1304914 OR 21,3 x 2,4 mm
804887 OR 22,1 x 1,6 mm

1472739
1420005

1472739 + 1549300 Adapter
1423974
1387100

1472739 + 1549301 Adapter
1423971
1378645
1743181



VoR

22194568
22354201
3197871
1078494

Lenght: 57 mm

M18 x 1,5 mm

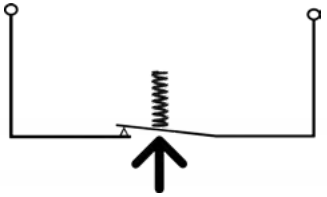

kg 0,07

Use: 1, 2

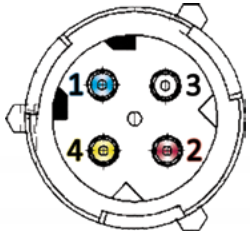

Suitable bayonet connector:
HD **317032**



DIN 72585-A1

GPR 04/2004 - 10/2006

801, 890, 900, 920

- 05 Gear selected housing
- 05 Planetary gear
- 05 Gear shift housing
- 05 Power take off

94 - 164 06/1995 - 12/2004

- 05 Planetary gear
- 05 Gear shift housing
- 05 Power take off
- 16 Differential lock

KN 11/2005 - 10/2006

- 05 Planetary gear
- 05 Gear shift control

94, 114, 124 10/1997 - 10/2006

- 05 Planetary gear
- 05 Power take off
- 16 Cable hardness
- 16 Differential lock

FH (4) 09/2012→
FH 09/2005 - 09/2012
FH 12/16 1998 - 09/2005

FM (4) 09/2012→
FM 09/2005 - 09/2012
FM 9/12 09/2003 - 09/2005
FM 7/9/10/12 01/2002 - 09/2003

GSS-SRC
Split and range gear shifting
Cable controlled

317075

Operating sensor

ScR

1743180
1472738

1423968 +
1543900 Adapter

VoR **3197870**





Lenght: 60 mm

M18 x 1,5 mm

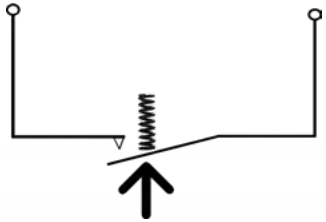

kg 0,07

Use: 1, 2



Suitable bayonet connector:
HD **317032**



DIN 72585-A1

LPGRS	08/2016 →
GPR	04/2004 - 2018

- 05 Power take off
- 07 Axle gear front wheel drive
- 08 Axle gear rear wheel drive

94 - 164	06/1995 - 12/2004

- 07 Axle gear front wheel drive
- 08 Axle gear rear wheel drive
- 16 Differential lock

FH (4)	09/2012→
FH	09/2005 - 09/2012
FH 12/16	1998 - 09/2005
FM (4)	09/2012→
FM	09/2005 - 09/2012
FM 9/12	09/2003 - 09/2005
FM 7/9/10/12	01/2002 - 09/2003

GSS-SRC
Split and range gear shifting
Cable controlled

317652

Switch for window winder

ScR **1421856**

1 # 0 # 2







GPR

KN

kg 0,04

318000

Protection shield → Front wheel housing, left



ScR

1482415
1435894

Material:
Painted steel

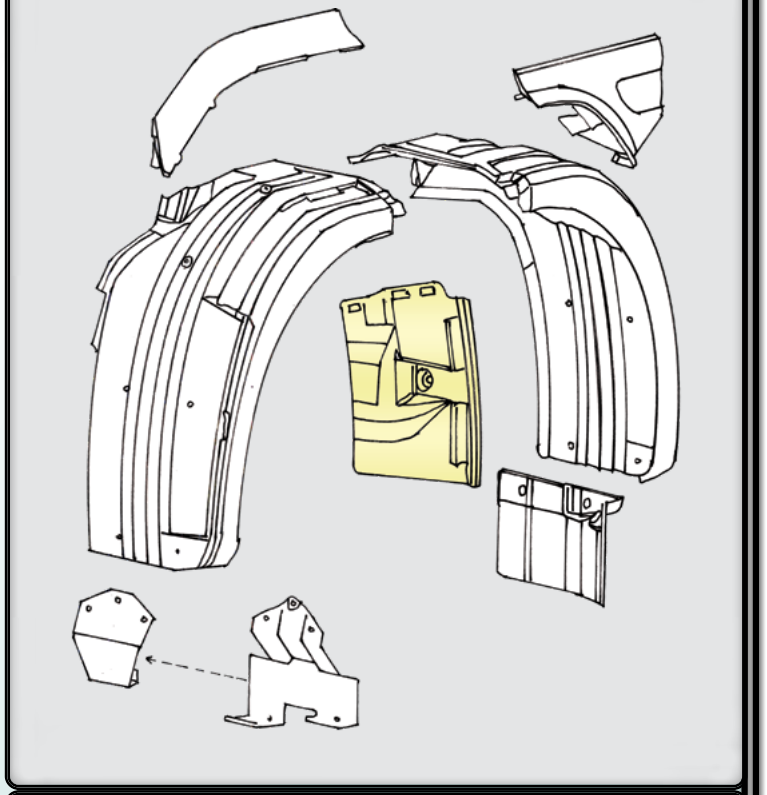

GPR 04/2004 - 2018
94 - 164 1994 - 2008

With mudguard in one or two peaces.

kg 2,5

HD 318001

318001

Protection shield → Front wheel housing, right

HD 318000



ScR

2182732
1397406

Material:
Painted steel

kg 2,5

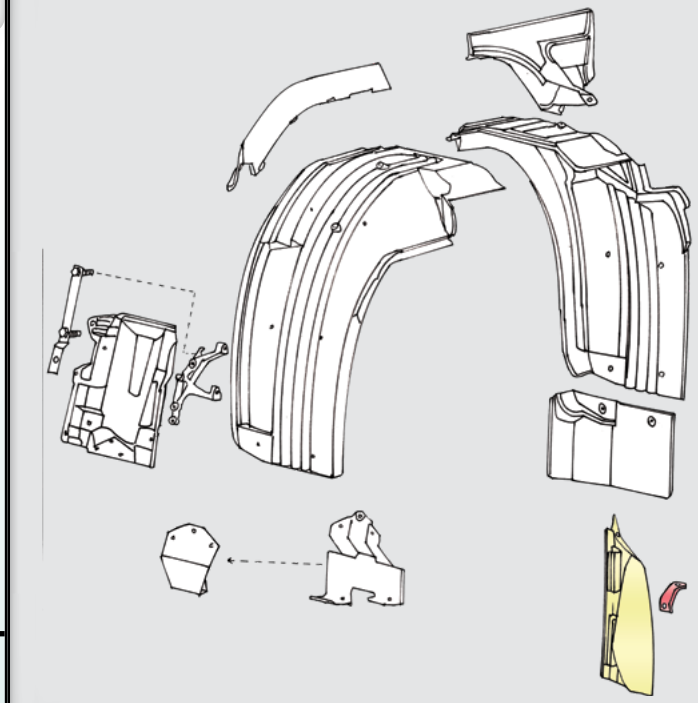

318004

Bracket → Front wheel housing, right

ScR **1446022**



Material:
Painted steel

kg 0,16

GPR 04/2004 - 2018
94 - 164 1994 - 2008

With mudguard in one or two peaces.

318010

Bracket → Mudguard when **steel** bumper, left & right

ScR **1398873**

Material:
Painted steel



kg 0,72

318011

Bracket → Mudguard when **plastic** bumper, left & right

ScR **1479927**

Material:
Painted steel



kg 0,94

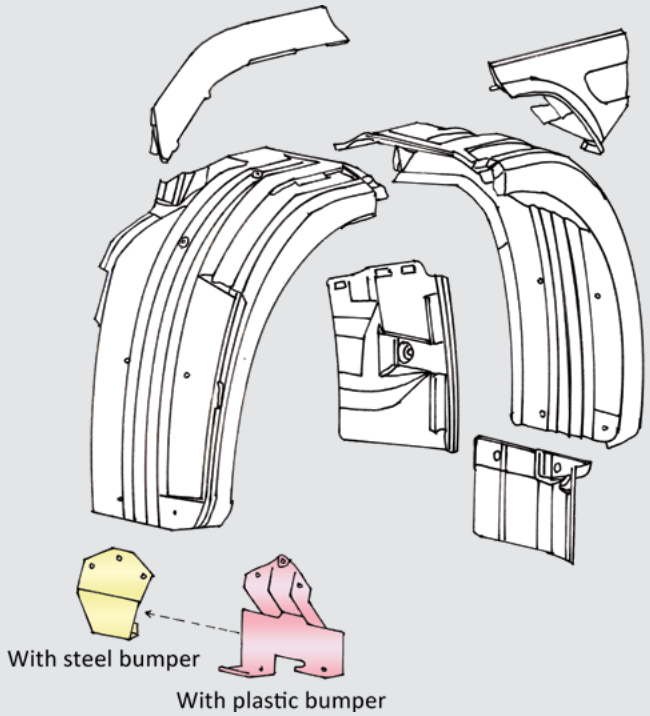

GPR 04/2004 - 2018
94 - 164 1994 - 2008

With mudguard in one or two peaces.

2 →

318015

Mounting rail → Air intake / Mudguard, Right

ScR

1721592
1481166



Material:
Steel

M14 M14

kg 0,53

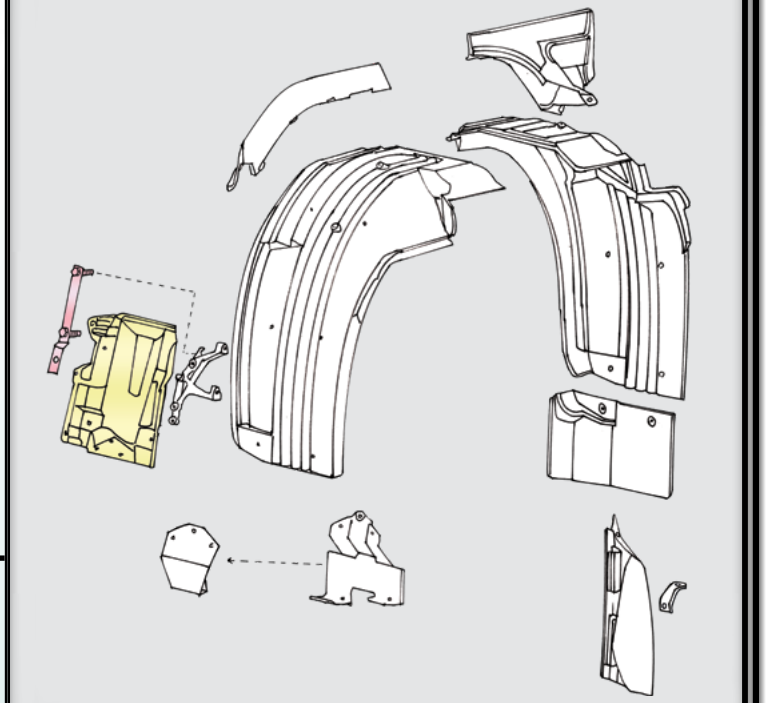

318018

Attachment plate → Air intake / Mudguard, Right

ScR

1741549
1721591



Material:
Painted steel

kg 4,52

R 04/2004 - 2018

- Air intake
- Without precleaner
- Winter

- With front mudguard in two peaces.

318048

Bracket → Mudguard housing, Front, Left

ScR 1355075



Material: Steel

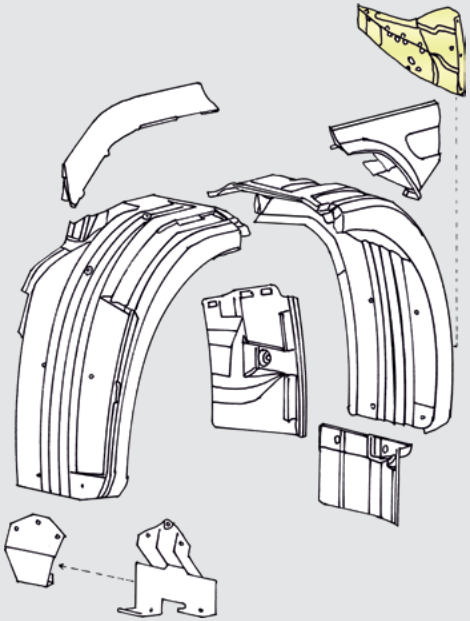

GPR 2004 - 2018

For mudguard in one peace

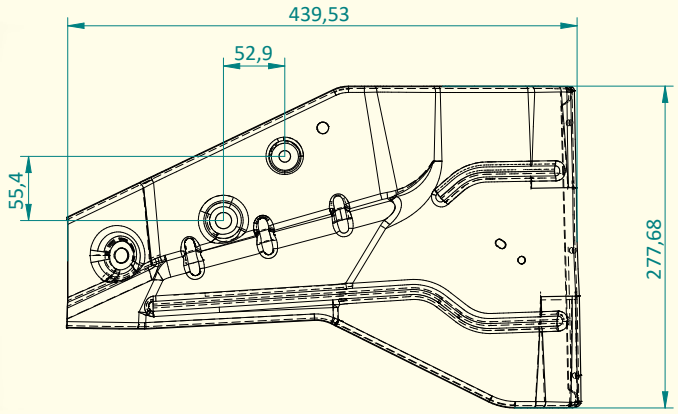

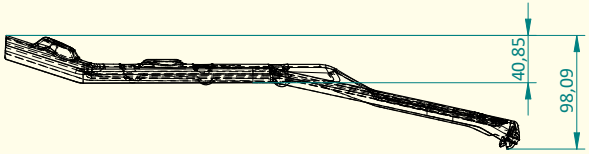

kg 1,85

318024

Bracket → Mudguard wheel housing, left

ScR

1866051
1741571

Material:
Painted steel



kg 6,9

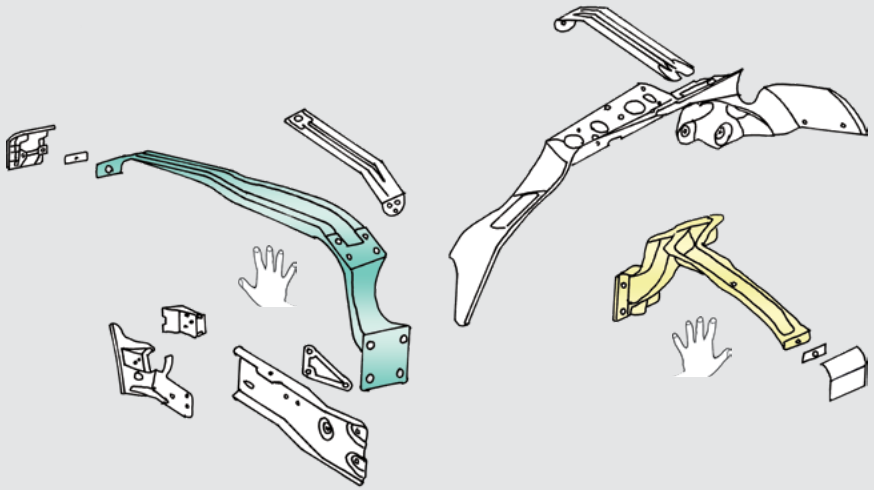

318025

Bracket → Mudguard wheel housing, right

ScR

1866050
1741570

Material:
Painted steel



kg 6,9

GPR	04/2004 - 2018
94 - 164	1994 - 2008

→ 318024

→ 318025

318020

Clasp → Mudguard wheel housing, left & right

ScR **1390747**

Material:
Steel



kg 0,46

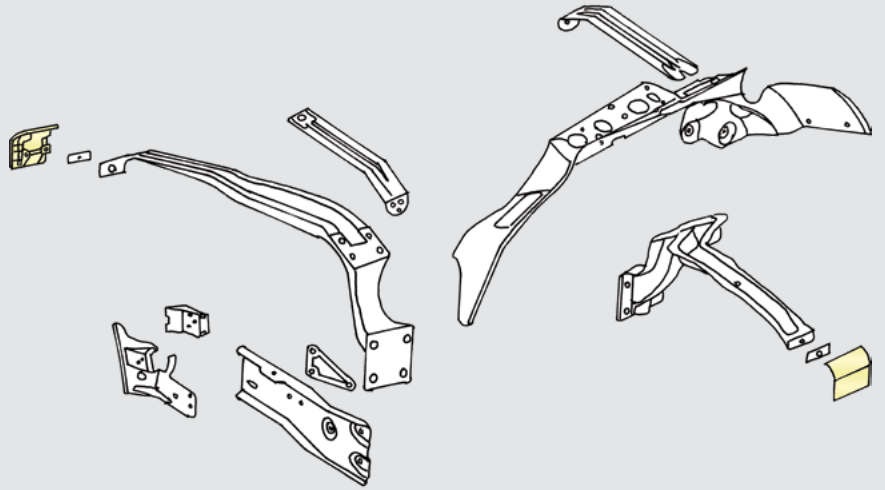

GPR	2004 - 2018
94 - 164	1994 - 2008
93 - 143	1987 - 1996

318027

Fastener → Wheel housing, left or right

ScR

2486685
1479924
1362711



Material:
Painted steel

kg 0,5

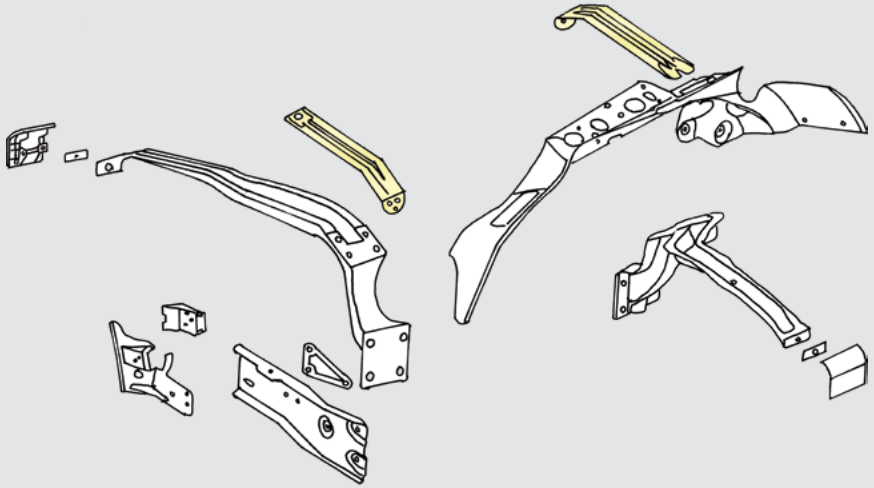

GPR 04/2004 - 2018
94 - 164 1994 - 2008

For trucks without integrated over fenders

318040

Bracket
→ Heatshield, compact silencer
→ Mudguard housing, front, right

ScR **1543041**

Material:
Painted steel



kg 0,91

GPR 04/2004 - 2018

Heatshield, compact silencer

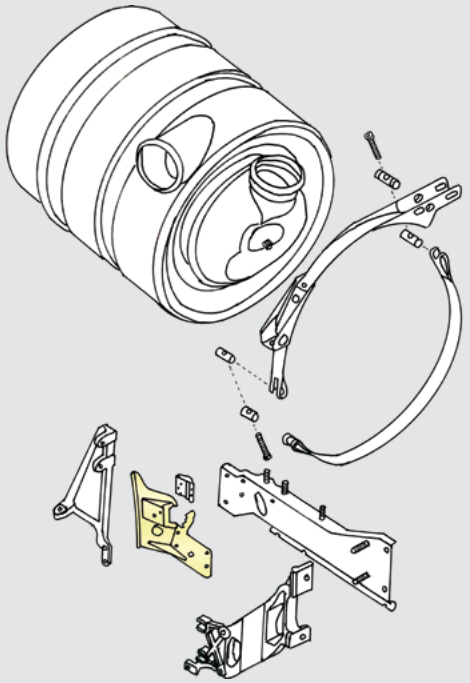

Mudguard housing, front, right

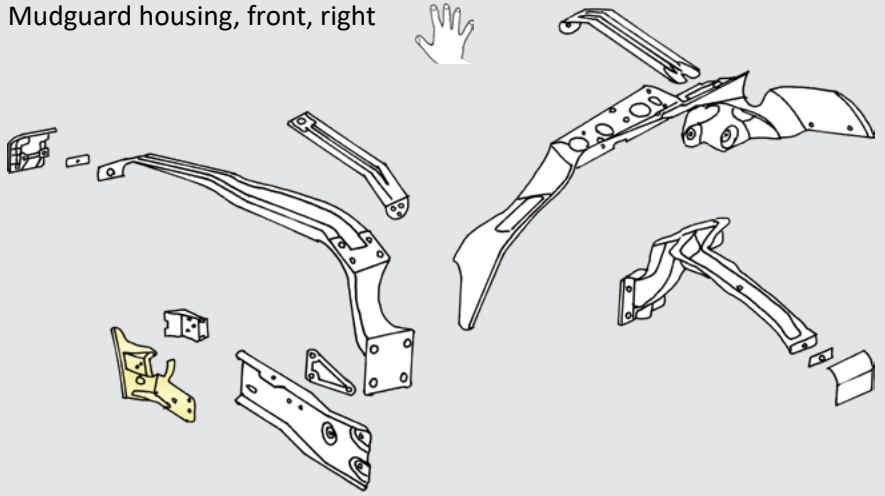

318049

Bracket → Mudguard housing, Front, Right

ScR

1377439
1355076

Material: Steel



kg 1,4

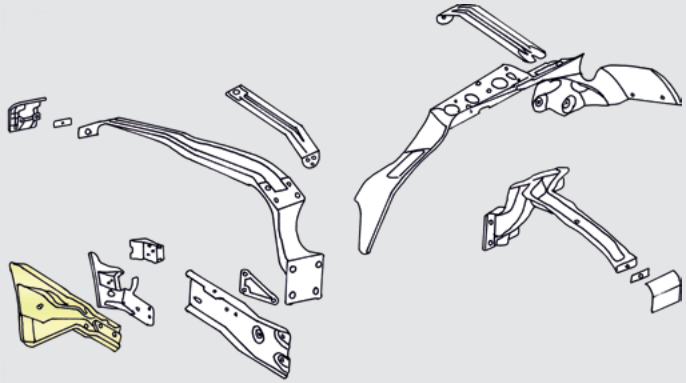

GPR	2004 - 2018
94 - 164	1994 - 2008

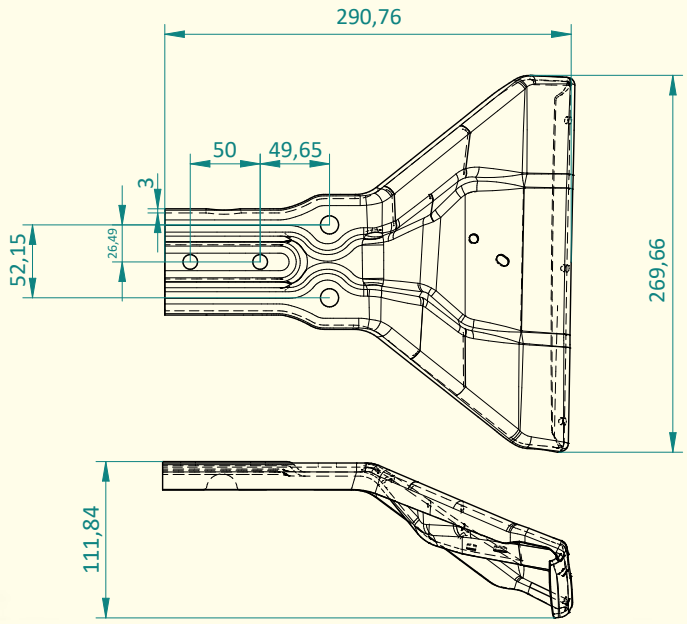

318038

Clasp

→ Mudguard step
→ Compact silencer
→ Cylindrical silencer
→ Wheel housing

ScR **1355381**

Material:
Painted steel



kg 0,24

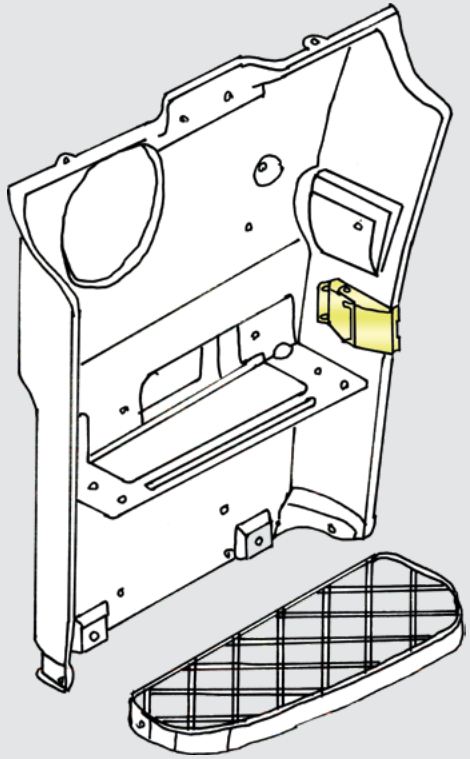

GPR	04/2004 - 2018
94 - 164	06/1995 - 12/2004

318090

Hinge → space frame, Left

ScR **1451527**

Material:
Steel

kg 0,39



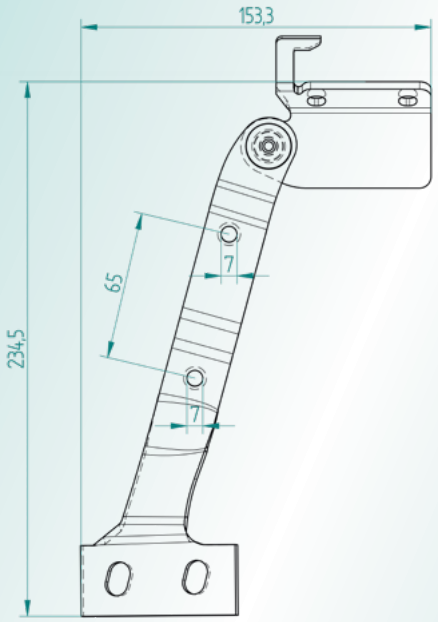

318091

Hinge → space frame, Right

ScR **1451528**

Material:
Steel

kg 0,39



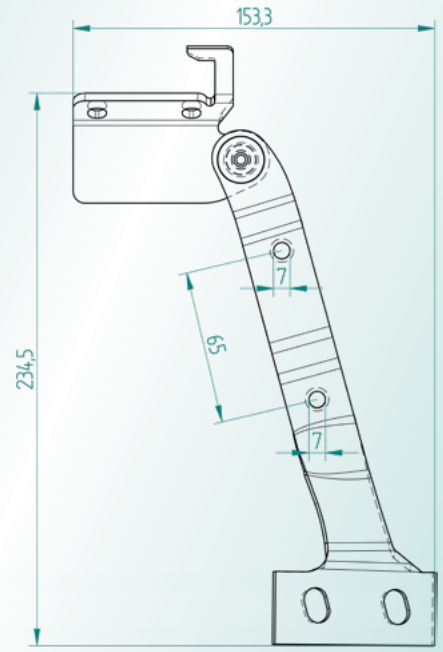

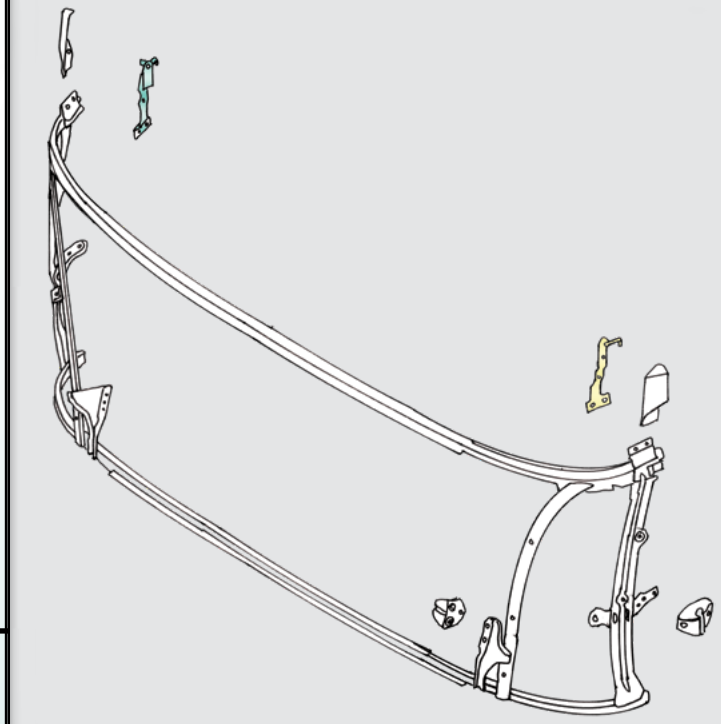

GPR 04/2004 - 2018

→ 318090

→ 318091

318110

Cable guide → Door / Cab corner, **Left**

ScR

1527660
1490557
1371659



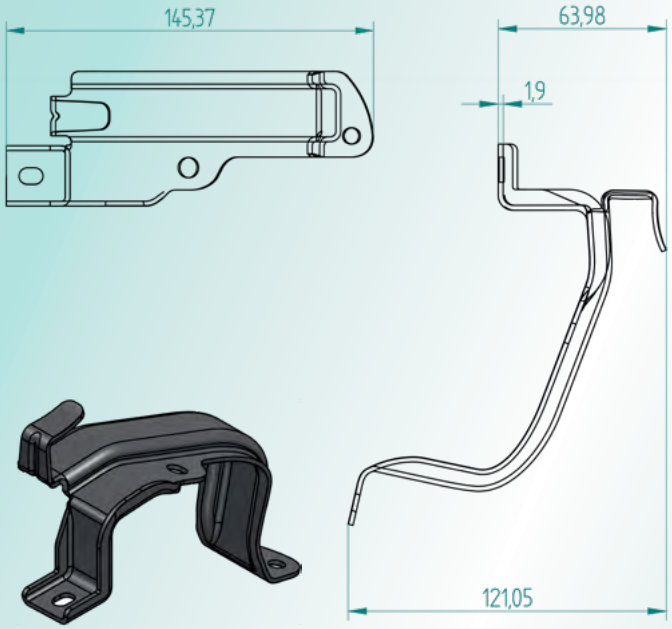

Material:
Steel

kg 0,16

318111

Cable guide → Door / Cab corner, **Right**

ScR

1527661
1490558
1371660



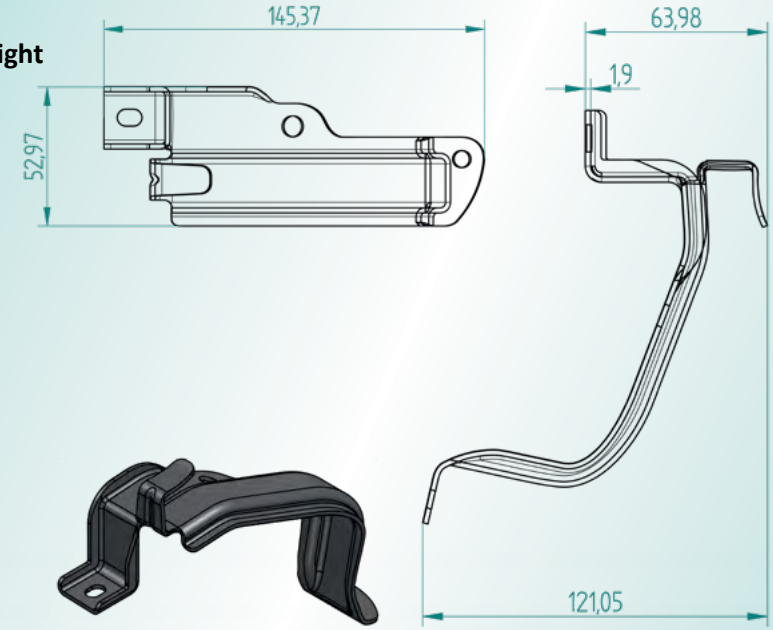

Material:
Steel

kg 0,16

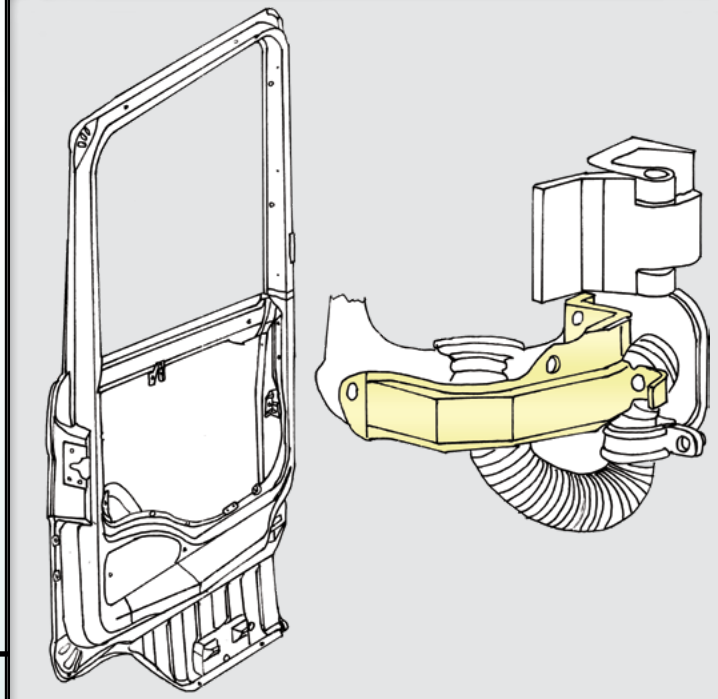

→ 318110

→ 318111

Door / Cab corner cable guide

GPR 04/2004 - 2018

Cab corner cable guide

94 - 164 1994 - 2008

318106

ScR (1485072)

Lock + key kit (left & right)

Do not remove the key from the lock housing before installing.
Не вынимайте ключ из замка до установки.

Material: Metal



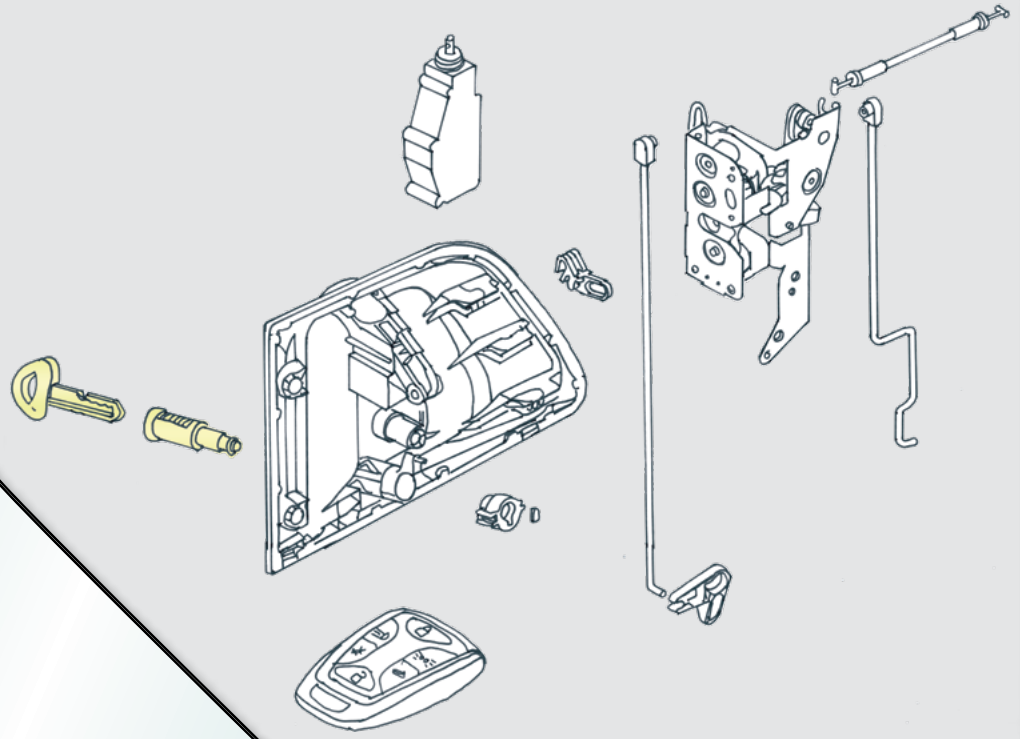

kg 0,16

GPR	04/2004 - 2018
94-164	06/1995 - 12/2004

See the lock installation instructions **before** installation.

Scanian Lukkopesän irroittaminen

- Irrota kahva autosta ja laita avain lukkopesään.
- Levitä lukitusjousta pienellä ruuvimeisselillä samaan aikaan kun työnnät lukkopesän ulos.
- Voit hieman raottaa valkoista muovisuojusta niin pääset paremmin käsiksi lukitusjouseen.
- Irrota lukkopesä kahvasta.
- Älä poista avainta lukkopesästä ennen kuin olet laittanut uudesta lukkopesästä vapautuneen muovisuojan päälle.

Removing the Scania lock cylinder

- Remove the handle from the door and insert the key into the lock.
- Spread the locking spring with a small screwdriver when pushing the cylinder out.
- You can slightly open the white plastic part to reach the locking spring easier.
- Remove the lock from the handle.
- Do not remove the key from lock until you have installed the plastic cover from the new lock.

Удаление цилиндра замка Scania

- Снимите ручку с машины и вставьте ключ в замок.
- Разожмите отвёрткой запорную пружину одновременно вытаскивая цилиндр замка.
- Вы можете немного отклонить белую защитную пластмассу для более удобного доступа.
- Отсоедините замок от ручки.
- Не вытаскивайте ключ с личинки, пока на неё не будет установлена пластиковый корпус с нового замка.



Scaniaan uuden lukkopesän asentaminen

- Laita avain lukkopesään jos se ei jo siellä ole.
- Poista lukkopesän päältä muovisuojus.
- Laita muovisuojus poistetun lukkopesän päälle.
- Asenna lukkopesä paikalleen poistamatta avainta.
- Työnnä lukkopesä perille asti. Pyöritä sitä kunnes se lukittuu paikalleen.
- Tarkista että lukitusjousi palautuu oikeaan asentoon.
- Älä poista avainta **lukkosylinteristä** ennen kuin lukkopesä on varmuudella kiinnittynyt paikalleen.
- Samalla kannattaa laittaa hieman rasvaa liikkuviin osiin.
- Kiinnitä ovenkahva paikalleen autoon.



Installing the Scania lock cylinder

- Insert the key into the lock, if it’s not in there yet.
- Remove the plastic cover.
- Install the plastic cover to the removed lock.
- Install the lock with inserted key.
- Push the lock cylinder all the way through. Turn in until it locks into its place.
- Check that the locking spring returns to its normal position.
- Do not remove the key from **the lock cylinder** before the installation is complete!
- Apply some grease to the moving parts.
- Install the handle to the door.

Установка цилиндра замка Scania

- Установите ключ в замок, если это ещё не было сделано.
- Удалите пластиковый корпус.
- Установите пластиковый корпус на старый замок.
- Установите замок с ключом внутри.
- Вставьте цилиндр замка до конца внутрь. Проверните до фиксации в правильном положении.
- Проверьте что бы запорная пружина вернулась в правильное положение.
- Не вынимайте ключ из личинки замка до окончания установки!
- Нанести смазку на все движущиеся детали.
- Установить ручку в дверь.

318134

Door lock, left

ScR

1867654
1789311

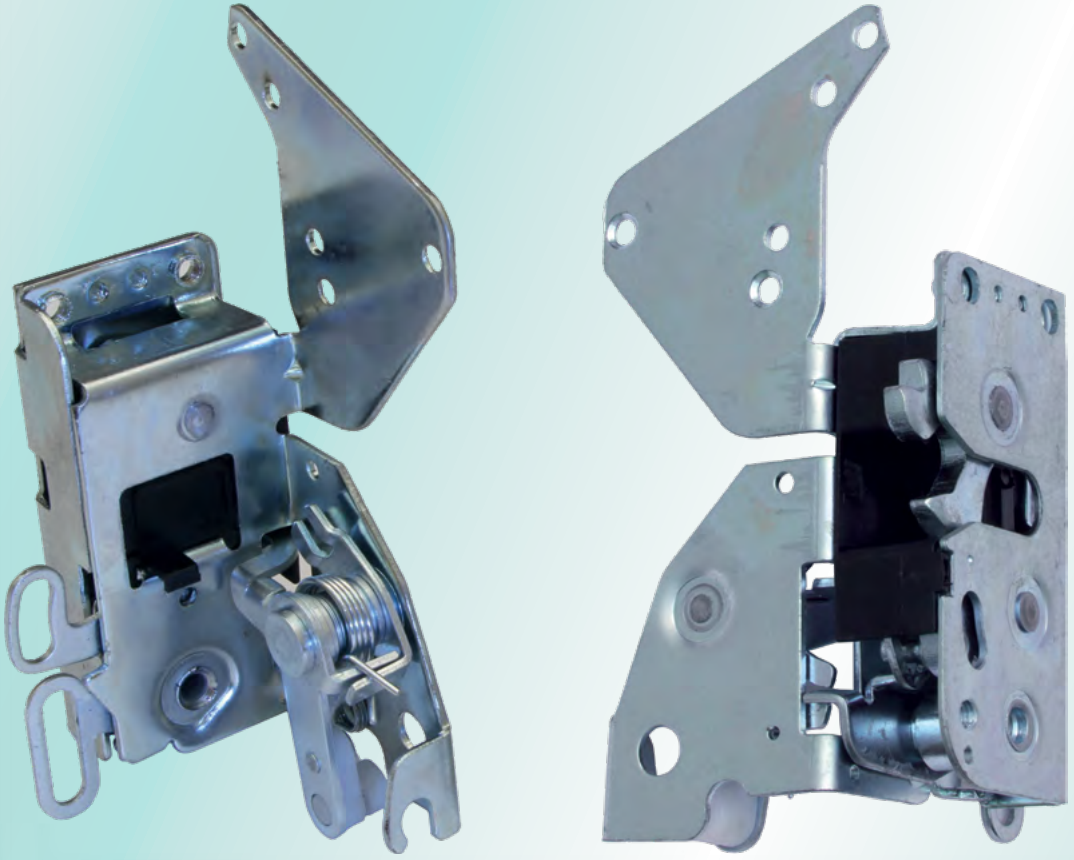

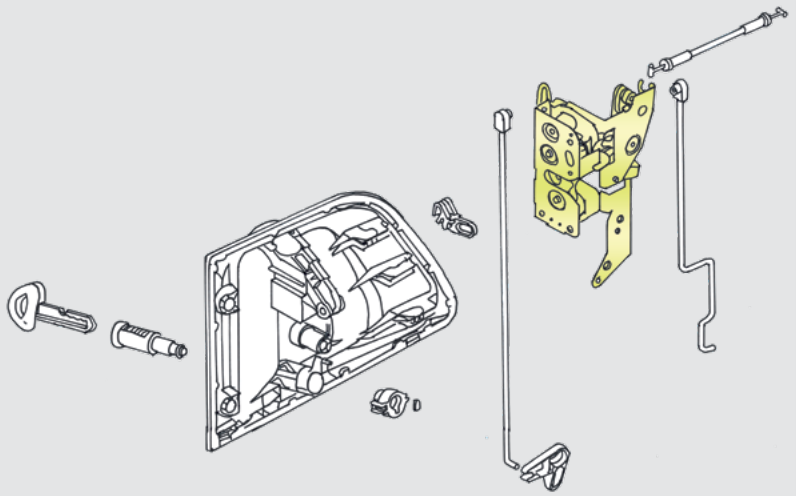



GPR 04/2004 - 2018

Key locking system - Система блокировки ключом

Lock for central locking system → HD 318136 & 318137
Замок центральной системы блокировки → HD 318136 & 318137

0,6 kg

Material: Steel

318135

Door lock, right

ScR

1867655
1789312

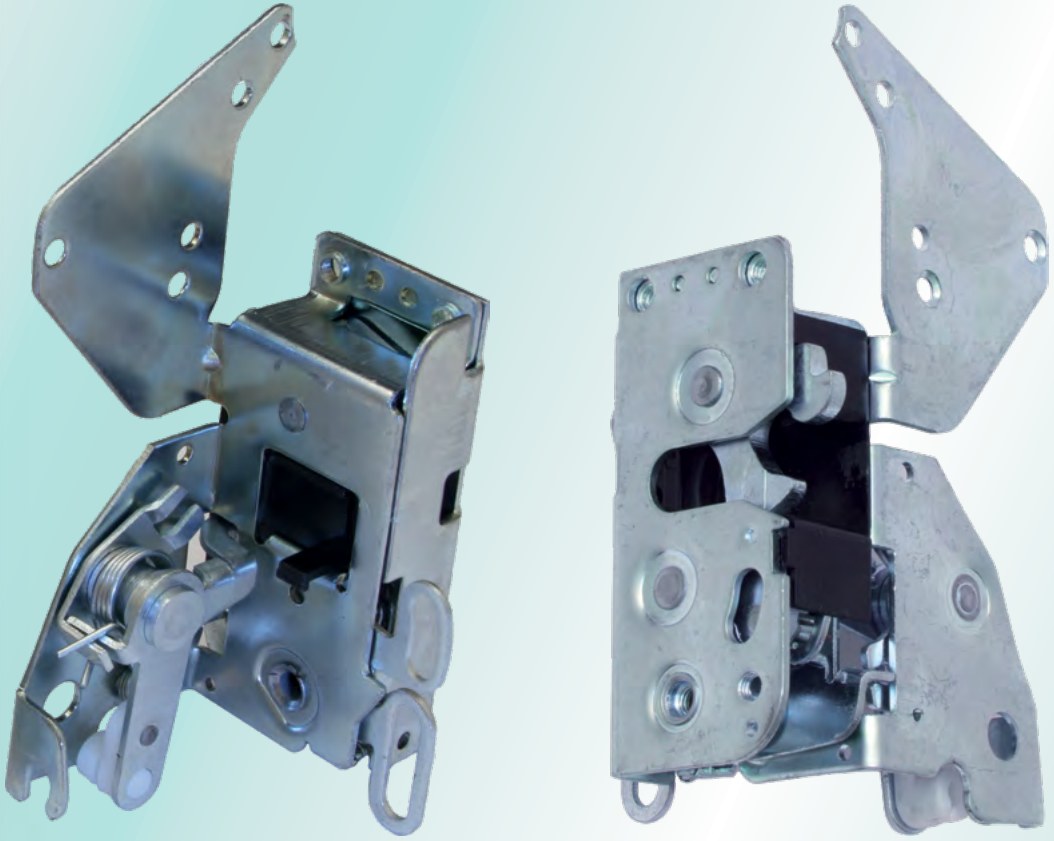

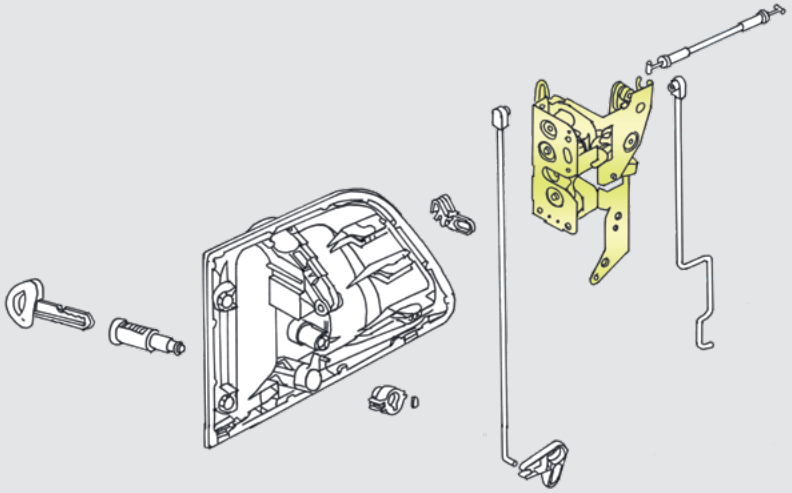



kg 0,6

Material: Steel

GPR 04/2004 - 2018

Key locking system - Система блокировки ключом

Lock for central locking system → HD 318136 & 318137
Замок центральной системы блокировки → HD 318136 & 318137

318136

Door lock, left

ScR

1867658
1789317

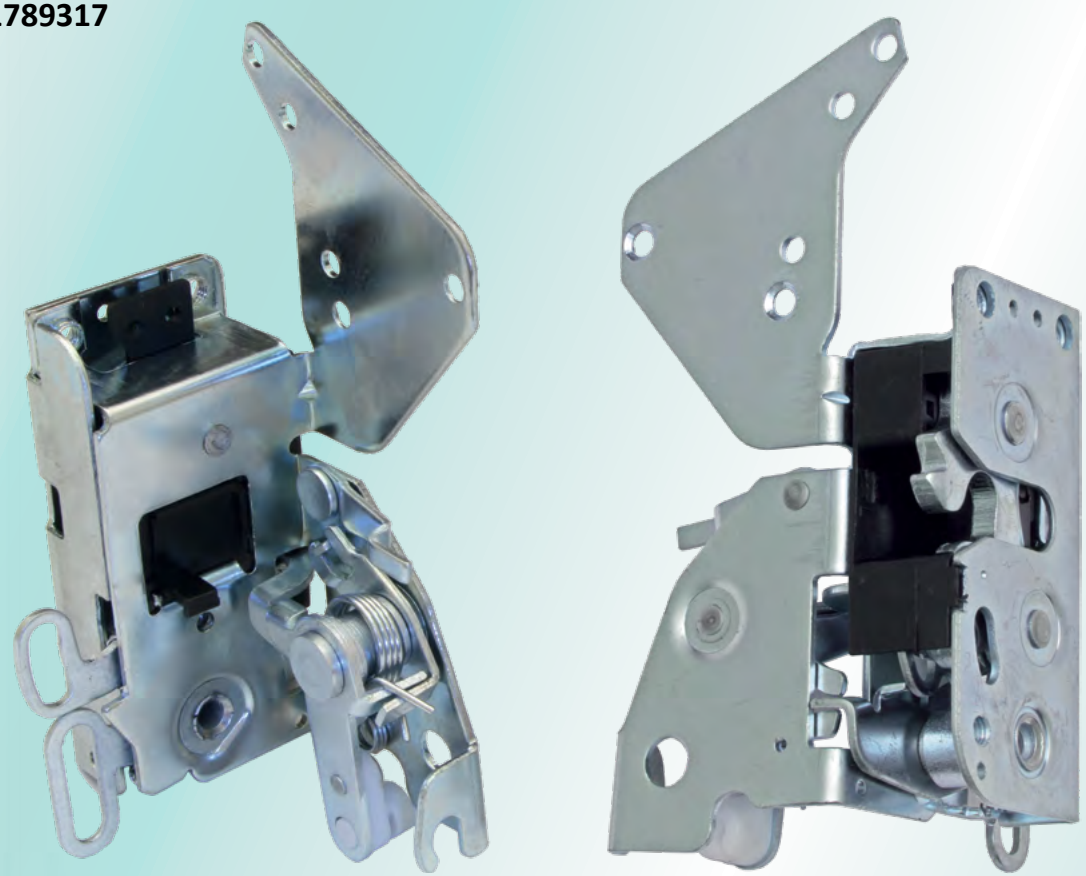

kg 0,6

Material: Steel

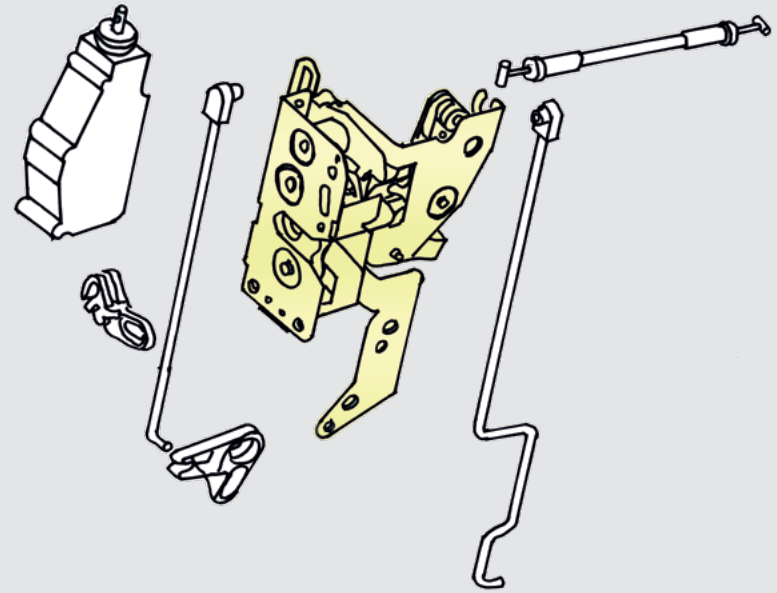

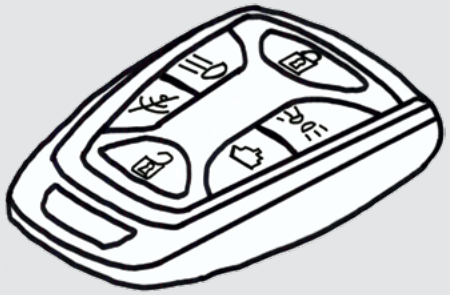

GPR 04/2004 - 2018

Central locking system - Центральная система блокировки

Lock for key locking system → HD 318134 & 318135
Замок системы блокировки ключом → HD 318134 & 318135

318137

Door lock, right

ScR

1867659
1789318

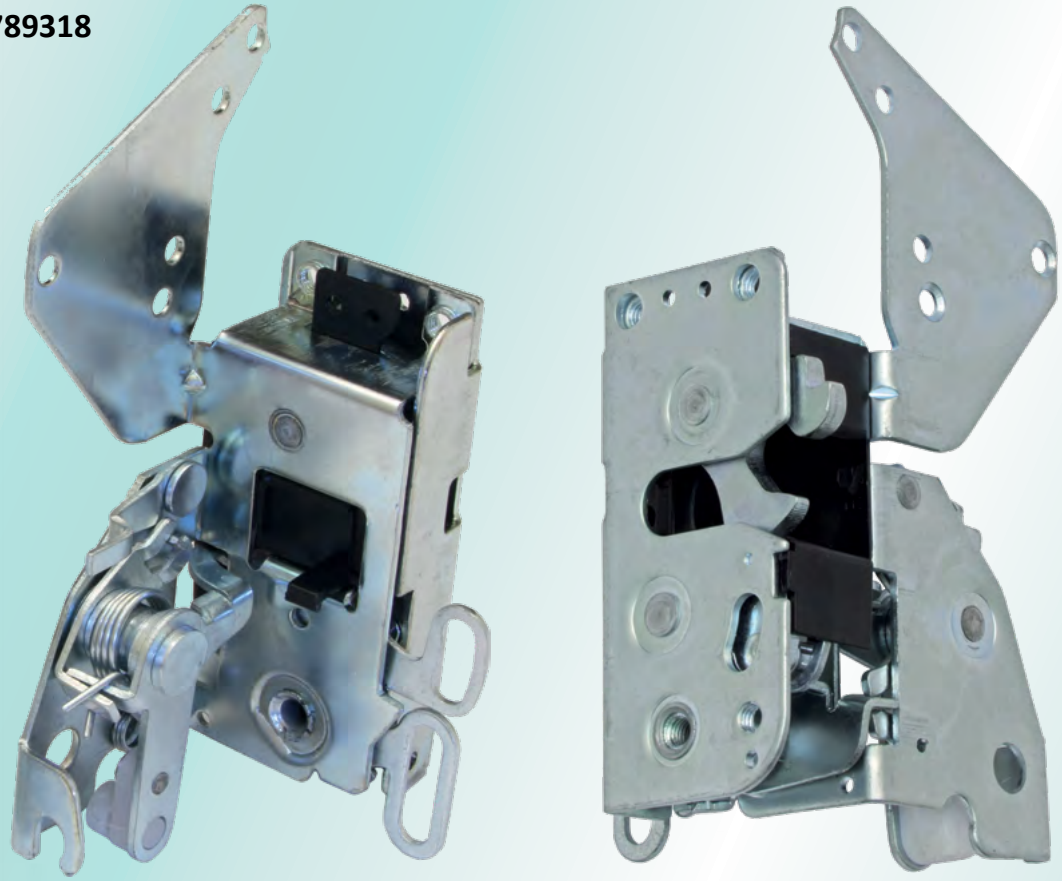

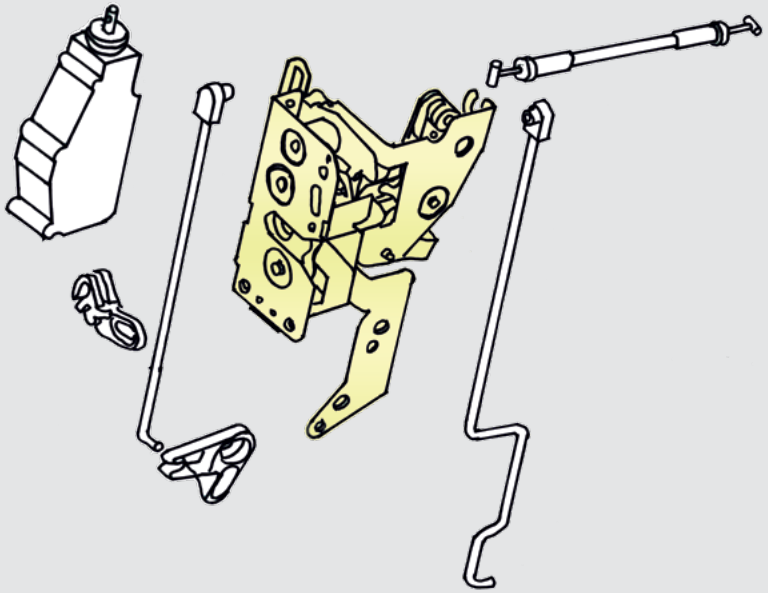

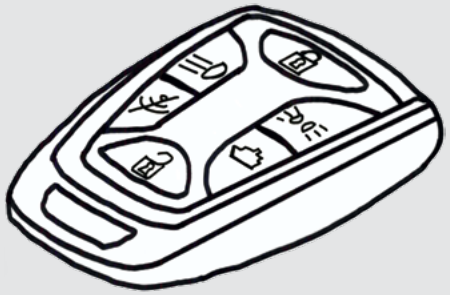

kg 0,6

Material: Steel

GPR 04/2004 - 2018

Central locking system - Центральная система блокировки

Lock for key locking system → HD 318134 & 318135
Замок системы блокировки ключом → HD 318134 & 318135

318210

Window lifter, left

ScR

2303349
2162366
1442294
1366849

Material: Steel

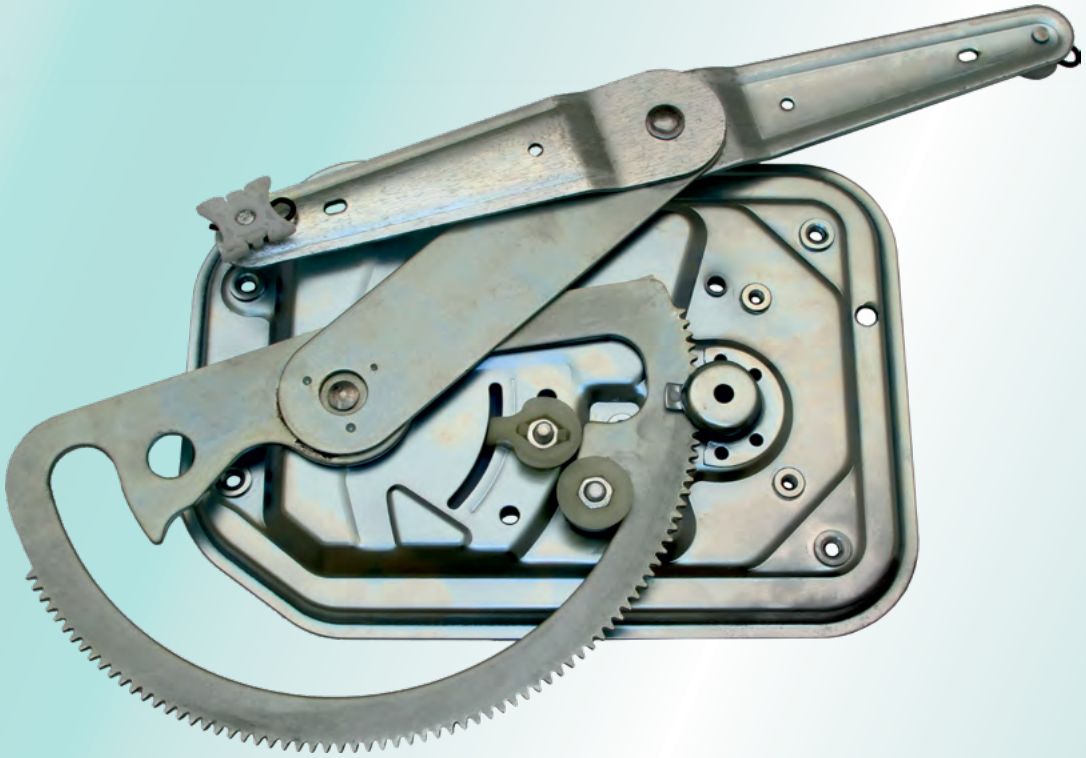

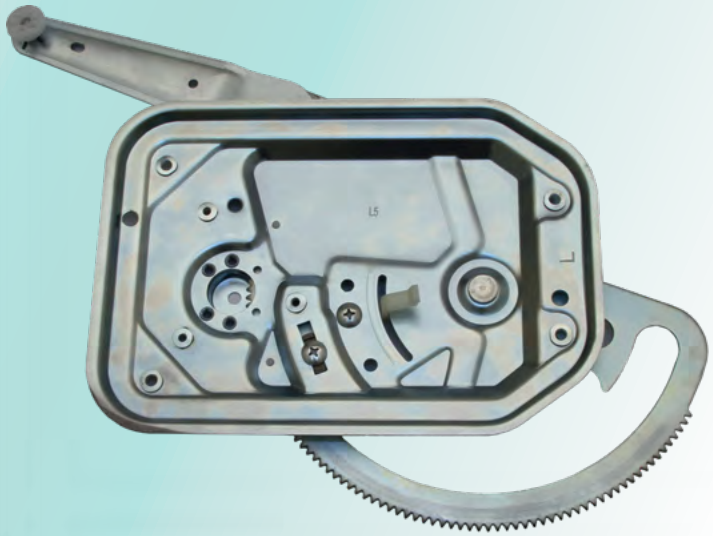

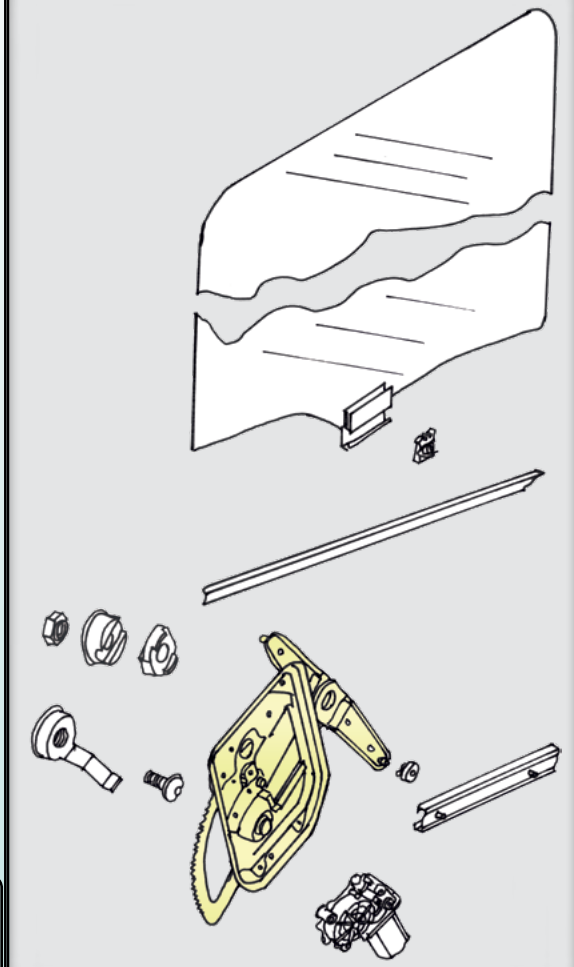

When installing the window winder, please remember to move the limiter to the correct hole according to your cabin.

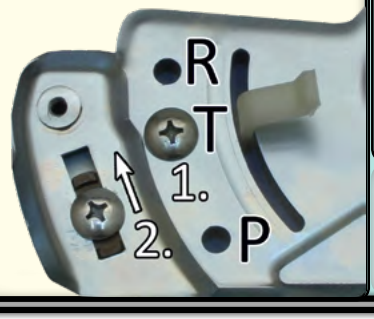

GPR	04/2004 - 2018
94 - 164	06/1995 - 01/2005

Suitable motor: HD 318220



Window winder adjustment

This info applies at least to 4-series Scania and CP CR CT cabs, but not Crew Cab cabs.

Background

It sometimes happens that the side window goes down too far when lowered and is damaged. It also happens that side windows with electric window lifts are pressed up too hard in the frame.

Service solution

A number of checks and adjustments must be carried out on the window winder when changing the side window in the door. This is to prevent the window from going down too far in the door when lowered.

If the cab is equipped with electric window lifts, adjustment must also be carried out with the window in the raised position. This is to prevent it from being pressed up too hard in the side window frame

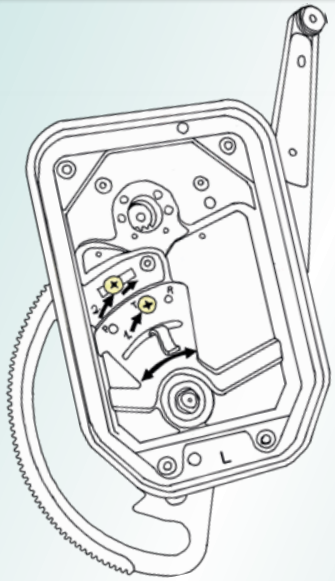

Adjustment of side window bottom position:

1. Check the type of cab in which the window is mounted.
2. Move the end stop to the correct position (P, R or T)

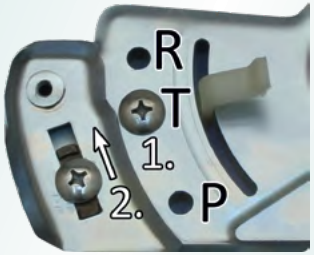

Adjustment of side window uppermost position:

(Only on cabs with electric window lifts)

1. Cut off a length of about 350 mm from a 2 mm thick welding rod.
2. Tape the rod to the top edge of the side window.
3. Undo the screw for the upper position end stop.
4. Run the window up by means of the electric motor.
5. Adjust the end position stop.
6. Lower the window and remove the length of welding rod.

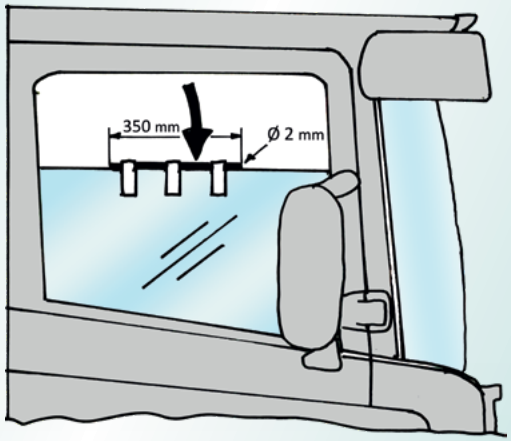

Ikkunannostimen säätö

Informaatio koskee ainakin 4-sarjan Scanioita ja CP CR CT ohjaamoita. Tämä ei koske miehistönkuljetusohjaamoita.

Taustatietoa

Joskus käy niin, että sivuikkuna menee laskettaessa liian pitkälle alas aiheuttaen vaurioita. Vaurioita aiheutuu myös silloin, kun sivuikkunoita nostettaessa sähköllä niitä painetaan liian kovaa ylös oven yläkehystä vasten.

Ongelman ratkaisu

Sähköiselle sekä mekaaniselle ikkunanostimelle suoritetaan tarkastuksia ja säätöjä silloin kun ovien laseja vaihdetaan. Säädöt estävät sen ettei sivulasi mene liian pitkälle alas.

Sähköisille ikkunannostimille on suoritettava myöskin lasin yläasennon säätö. Yläasennon säätö estää lasin painumista liian kovaa oven yläkarmia vasten.

Sivuikkunan pohja-asennon säätö:

1. Tarkista ohjaamotyyppi, johon ikkuna on asennettu.
2. Siirrä rajoitin oikeaan asentoon (P, R tai T). Katso kuvaa.

Sivuikkunan säätö yläasentoon:

(Koskee vain sähkökäyttöisiä ikkunannostimia)

1. Katkaiskaa noin Ø 2mm paksuista hitsauslankaa noin 350mm pituinen pätkä.
2. Teipatkaa se sivuikkunan yläreunaan kuvan mukaisesti.
3. Löysätkää yläasennon säätöruuvi no. 2
4. Nostakaa ikkuna yläasentoon sähkömoottorin avulla.
5. Siirrä ruuvi nuolen osoittamaan suuntaan ääriasentoon ja lukitse se.
6. Laske sivuikkunaa alemmaksi ja poista teipit ja hitsauslanka.

Регулировка подъемника окон
Информация относится по крайней мере к Scania 4 серии и CP CR CT кабинам, но не к кабинам для экипажа.

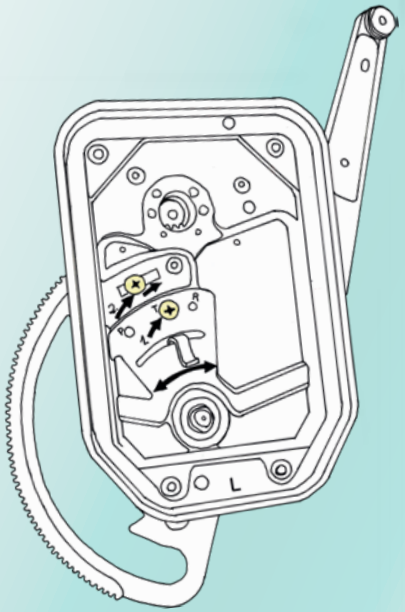

Предыстория
Иногда, при опускании окно уходит слишком много вниз, что приводит к повреждениям.
Повреждения также могут произойти, когда окно поднимают электроприводом слишком сильно вверх и оно упирается в верхнюю часть двери.

Решение проблемы
При замене стекла, как электрическому так и механическому подъемнику проводят осмотр и регулировку.
Регулирование предназначено для предотвращения опускания стекла слишком глубоко вниз.

Электрическому подъемнику дополнительно нужно проводить регулировку верхнего положения стекла.
Регулировка верхнего положения предотвращает чрезмерно сильное поднятие и касания стекла края двери.

Регулировка нижнего положения бокового стекла:

1. Проверьте тип кабины в которую устанавливается стекло.
2. Установите ограничитель в правильном положении (P, R или T). Смотрите фото.

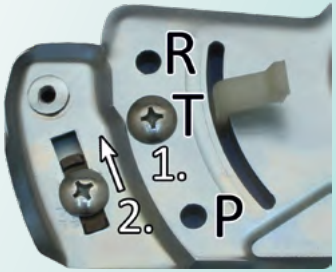

Регулировка верхнего положения бокового стекла:
(Относится только к электрическому подъемнику)

1. Отрежьте около 350мм присадочного прутка для сварки диаметром Ø 2мм.
2. Прикрепите пруток к верхней части стекла, как показано на фото.
3. Ослабьте регулирующий болт №2 верхнего положения.
4. Поднимите стекло в верхнее положение с помощью электродвигателя.
5. Переместите болт в крайнее положение показываемое стрелкой и затяните.
6. Опустите стекло и удалите прутик с креплениями.

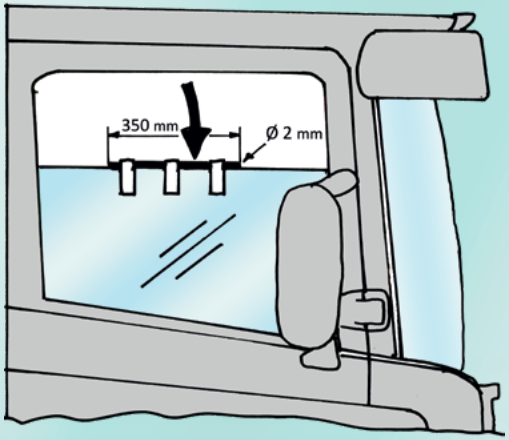

318211

Window lifter, right

ScR

2303352
2162367
1442295
1366850

Material: Steel

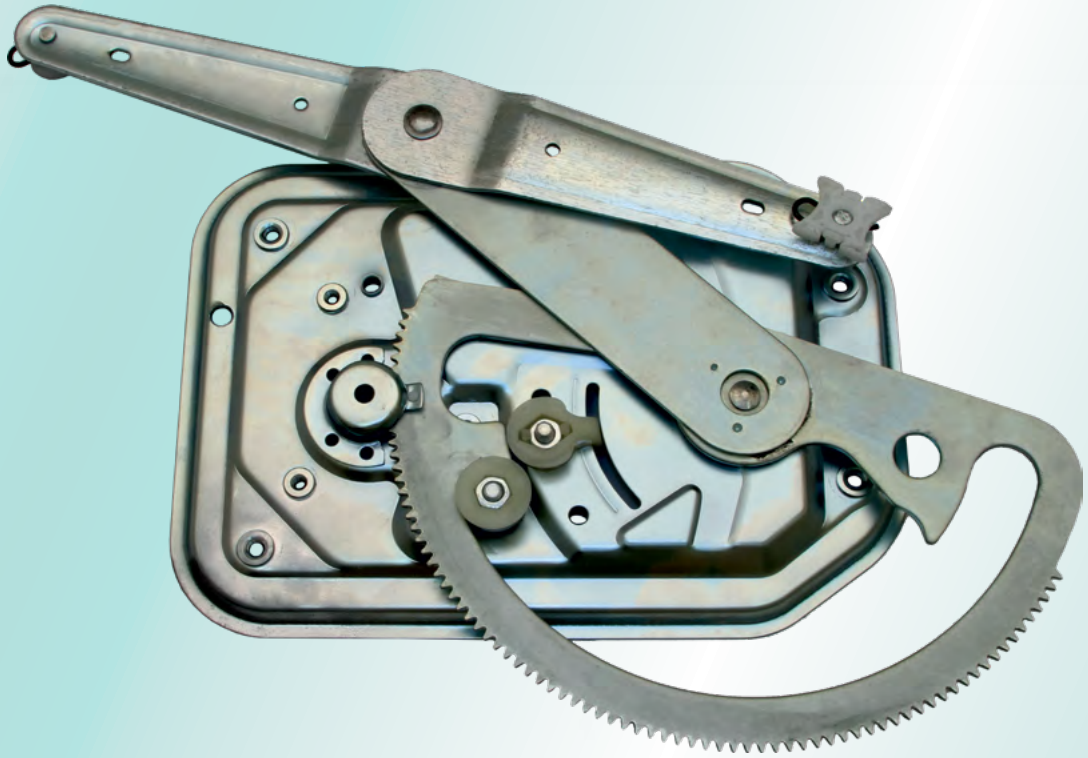

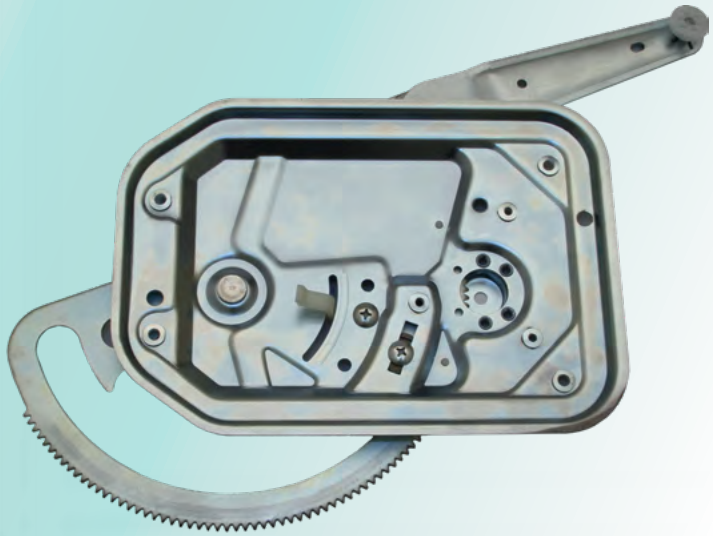

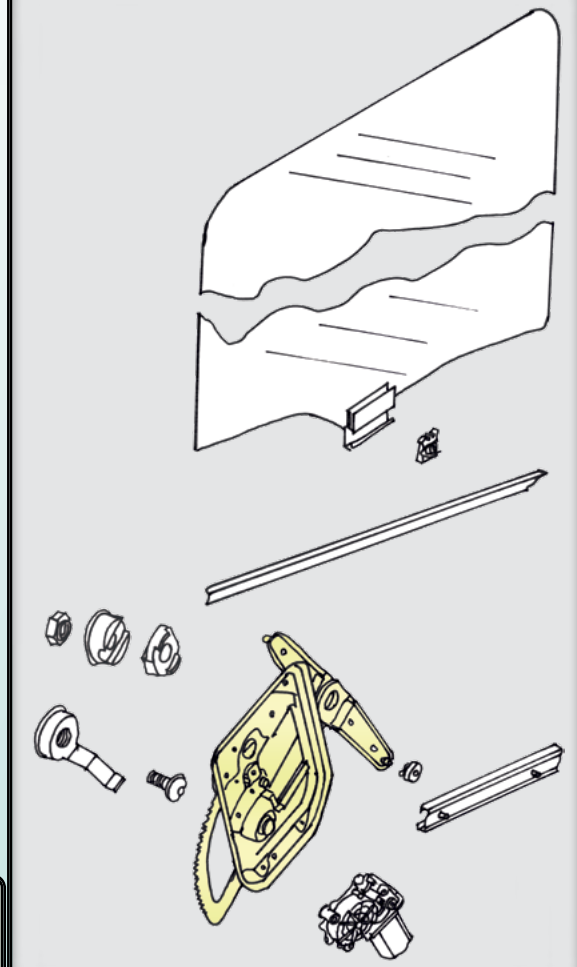

When installing the window winder, please remember to move the limiter to the correct hole according to your cabin.

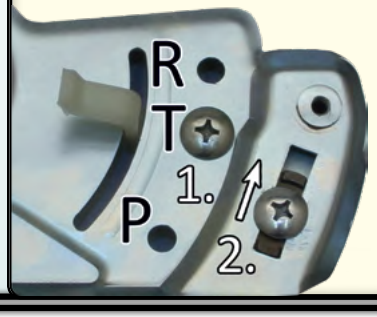

GPR	04/2004 - 2018
94 - 164	06/1995 - 01/2005

Suitable motor: HD 318221



Window winder adjustment

This info applies at least to 4-series Scania and CP CR CT cabs, but not Crew Cab cabs.

Background

It sometimes happens that the side window goes down too far when lowered and is damaged. It also happens that side windows with electric window lifts are pressed up too hard in the frame.

Service solution

A number of checks and adjustments must be carried out on the window winder when changing the side window in the door.
This is to prevent the window from going down too far in the door when lowered.

If the cab is equipped with electric window lifts, adjustment must also be carried out with the window in the raised position. This is to prevent it from being pressed up too hard in the side window frame

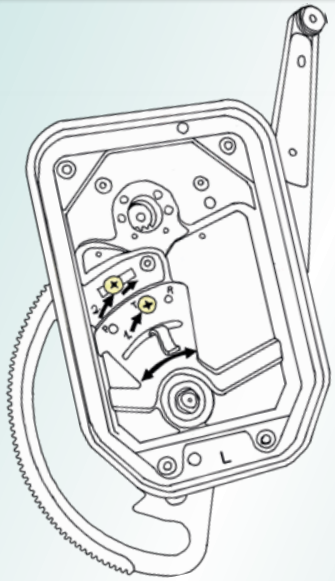

Adjustment of side window bottom position:

1. Check the type of cab in which the window is mounted.
2. Move the end stop to the correct position (P, R or T)

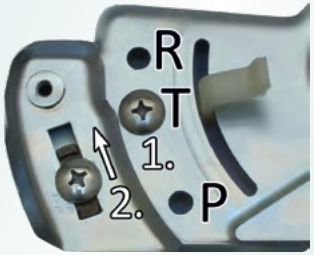

Adjustment of side window uppermost position:

(Only on cabs with electric window lifts)

1. Cut off a length of about 350 mm from a 2 mm thick welding rod.
2. Tape the rod to the top edge of the side window.
3. Undo the screw for the upper position end stop.
4. Run the window up by means of the electric motor.
5. Adjust the end position stop.
6. Lower the window and remove the length of welding rod.

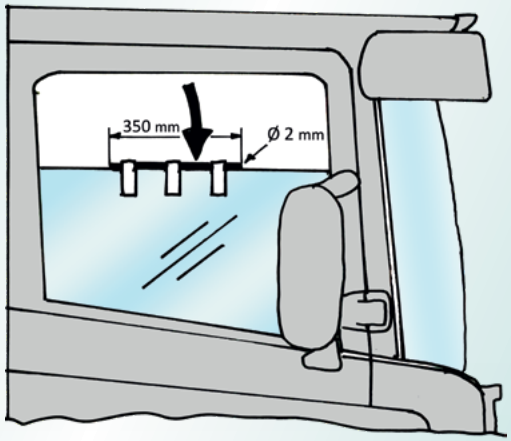

Ikkunannostimen säätö

Informaatio koskee ainakin 4-sarjan Scanioita ja CP CR CT ohjaamoita. Tämä ei koske miehistönkuljetusohjaamoita.

Taustatietoa

Joskus käy niin, että sivuikkuna menee laskettaessa liian pitkälle alas aiheuttaen vaurioita. Vaurioita aiheutuu myös silloin, kun sivuikkunoita nostettaessa sähköllä niitä painetaan liian kovaa ylös oven yläkehystä vasten.

Ongelman ratkaisu

Sähköiselle sekä mekaaniselle ikkunanostimelle suoritetaan tarkastuksia ja säätöjä silloin kun ovien laseja vaihdetaan. Säädöt estävät sen ettei sivulasi mene liian pitkälle alas.

Sähköisille ikkunannostimille on suoritettava myöskin lasin yläasennon säätö. Yläasennon säätö estää lasin painumista liian kovaa oven yläkarmia vasten.

Sivuikkunan pohja-asennon säätö:

1. Tarkista ohjaamotyyppi, johon ikkuna on asennettu.
2. Siirrä rajoitin oikeaan asentoon (P, R tai T). Katso kuvaa.

Sivuikkunan säätö yläasentoon:

(Koskee vain sähkökäyttöisiä ikkunannostimia)

1. Katkaiskaa noin Ø 2mm paksuista hitsauslankaa noin 350mm pituinen pätkä.
2. Teipatkaa se sivuikkunan yläreunaan kuvan mukaisesti.
3. Löysätkää yläasennon säätöruuvi no. 2
4. Nostakaa ikkuna yläasentoon sähkömoottorin avulla.
5. Siirrä ruuvi nuolen osoittamaan suuntaan ääriasentoon ja lukitse se.
6. Laske sivuikkunaa alemmaksi ja poista teipit ja hitsauslanka.

Регулировка подъемника окон
Информация относится по крайней мере к Scania 4 серии и CP CR CT кабинам, но не к кабинам для экипажа.

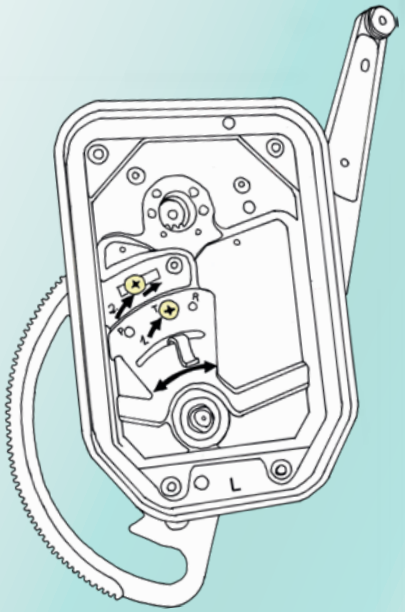

Предыстория
Иногда, при опускании окно уходит слишком много вниз, что приводит к повреждениям.
Повреждения также могут произойти, когда окно поднимают электроприводом слишком сильно вверх и оно упирается в верхнюю часть двери.

Решение проблемы
При замене стекла, как электрическому так и механическому подъемнику проводят осмотр и регулировку.
Регулирование предназначено для предотвращения опускания стекла слишком глубоко вниз.

Электрическому подъемнику дополнительно нужно проводить регулировку верхнего положения стекла.
Регулировка верхнего положения предотвращает чрезмерно сильное поднятие и касания стекла края двери.

Регулировка нижнего положения бокового стекла:

1. Проверьте тип кабины в которую устанавливается стекло.
2. Установите ограничитель в правильном положении (P, R или T). Смотрите фото.

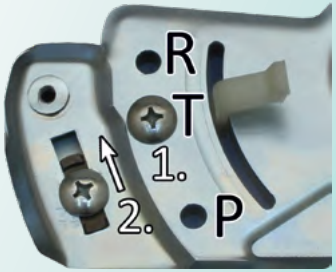

Регулировка верхнего положения бокового стекла:
(Относится только к электрическому подъемнику)

1. Отрежьте около 350мм присадочного прутка для сварки диаметром Ø 2мм.
2. Прикрепите пруток к верхней части стекла, как показано на фото.
3. Ослабьте регулирующий болт №2 верхнего положения.
4. Поднимите стекло в верхнее положение с помощью электродвигателя.
5. Переместите болт в крайнее положение показываемое стрелкой и затяните.
6. Опустите стекло и удалите прутик с креплениями.

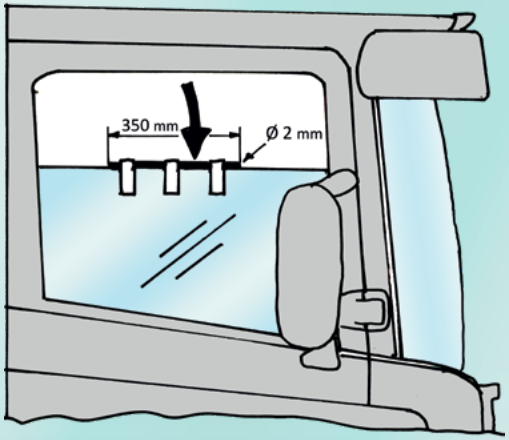

318220

Motor → window winder, left

ScR

2572352
2303350
1442292
1366761
560097

- Overheat protection.
- Improved bimetal components.



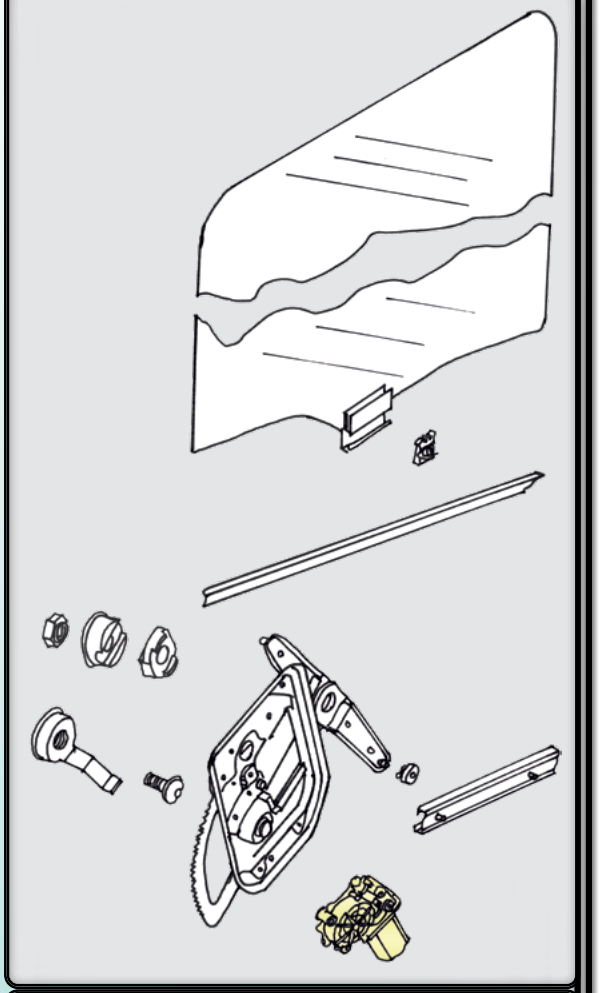

GPR	04/2004 - 2018
94 - 164	06/1995 - 01/2005

Suitable winder: HD 318210



kg 0,91

318221

Motor → window winder, right

ScR

2572363
2303355
1442293
1366762
560098

- Overheat protection.
- Improved bimetal components.

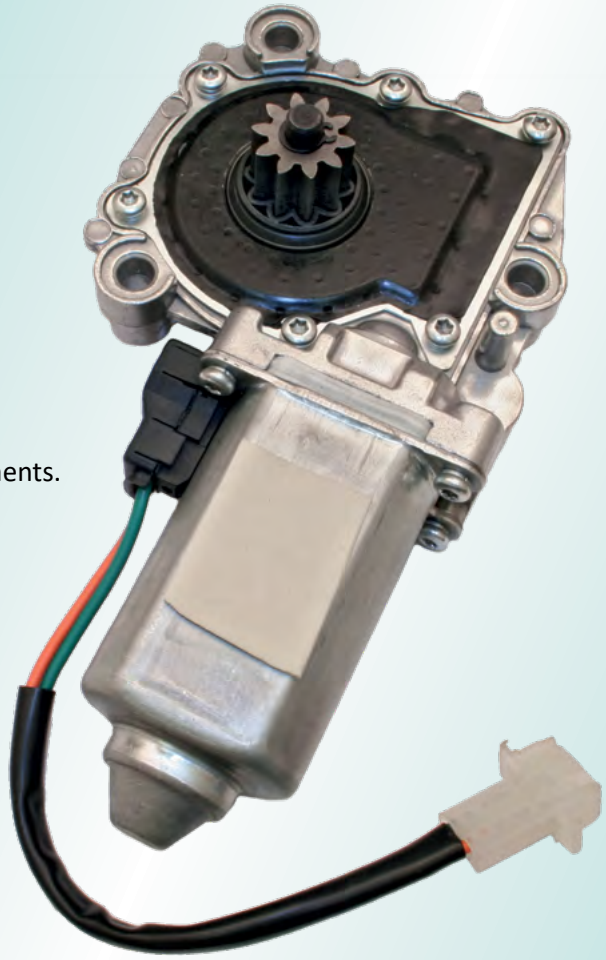

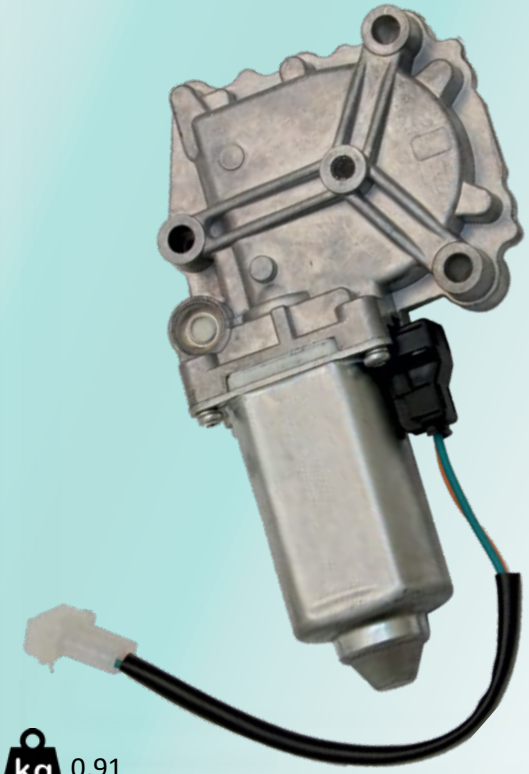

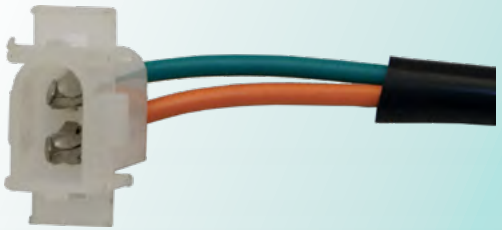

kg 0,91

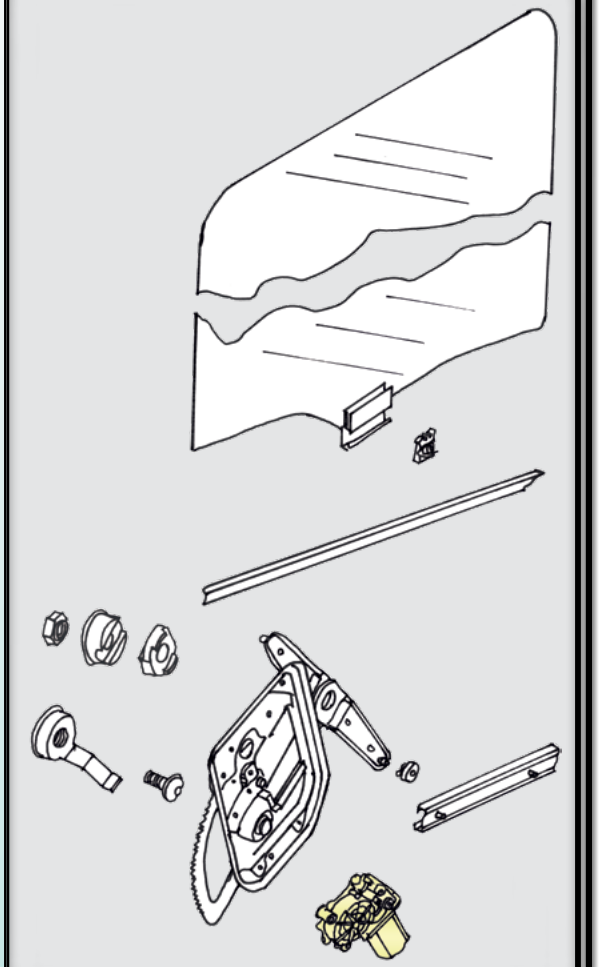

GPR	04/2004 - 2018
94 - 164	06/1995 - 01/2005

Suitable winder: HD 318211



318430

Pump for windscreen

ScR 1722690

Material: Plastic







With extra parts just like Scania

kg 0,15

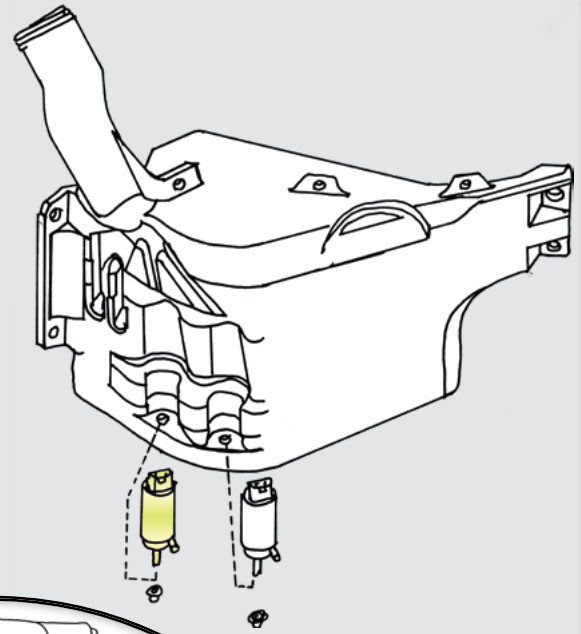

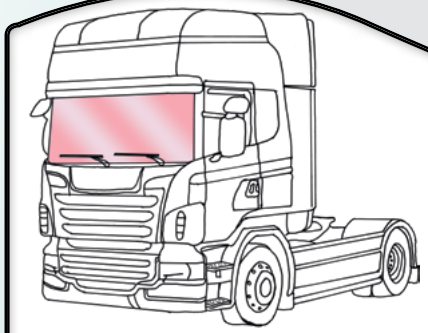

LGPRS	08/2016→			
GPR	03/2009 - 2018			With level sensor
	2047054→	5226379→	9142034→	3647798→
PR	→03/2009	→2047053		With level sensor

318434

Pump for windscreen / head light washer

ScR **1548504**

Material: Plastic





kg 0,14

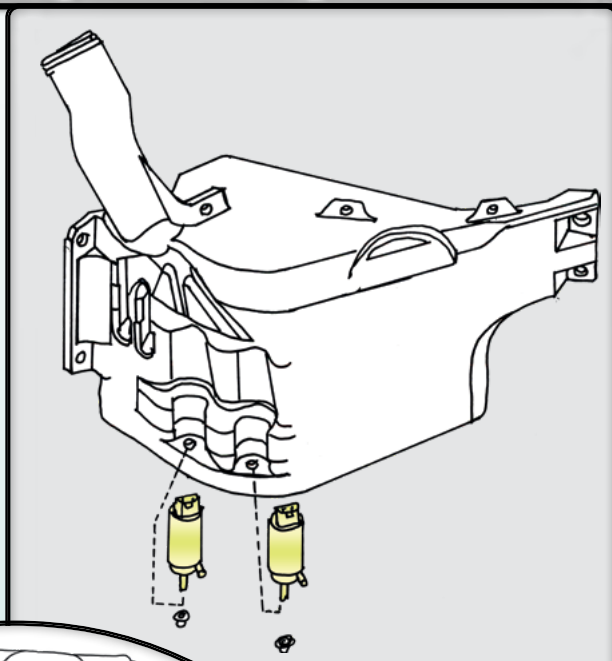

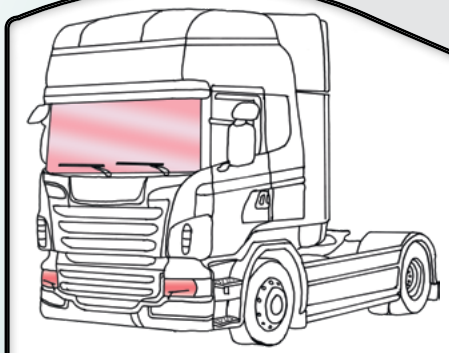

PR →03/2009 Without level sensor

→2047053 →5226378 →9142033 →3647797

94 - 164 06/1995 - 12/2004

318449

Motor, 5-pole

LHD RHD

ScR

1922229
1859562
1943657
1922234
1765185







New HD-structure:
HD-wiper motor has a new improved structure, which is developed after hours of testing in most extreme conditions.

Новая HD структура:
HD-мотор дворников имеет новую улучшенную структуру, которая является результатом многих часов тестирования в самых невообразимых условиях работы.

kg 1,6

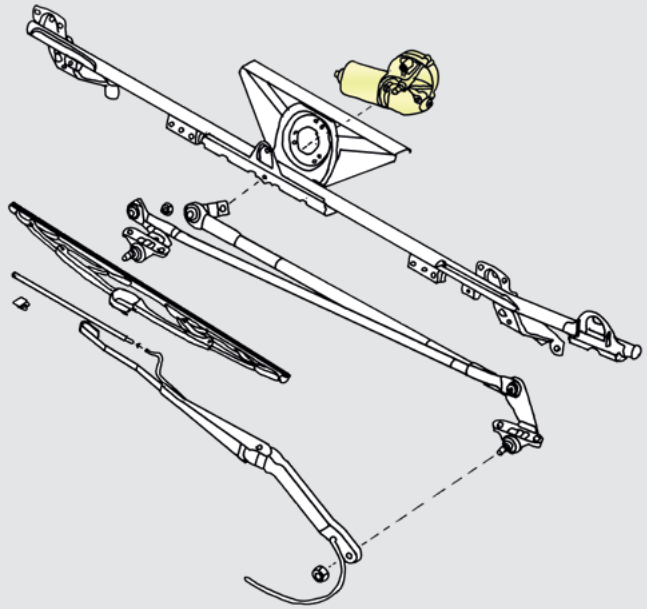

GPR

2028544→ 5180861→ 9122729→ 3617503→	07/2007 - 2018

318448

Motor, 5-pole

LHD RHD

ScR

2348384
1858661
1392755

+1360371
+1355396
+1355395
+1342966

↓

1318506 (5-pole)



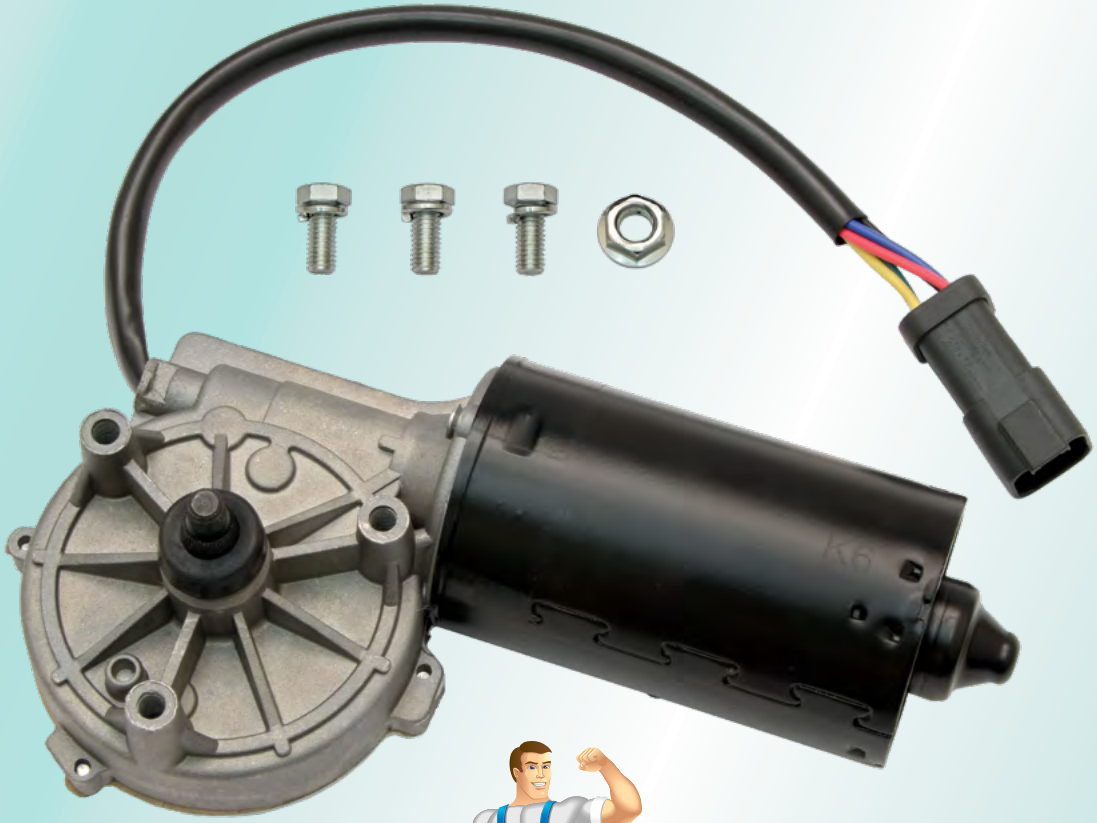



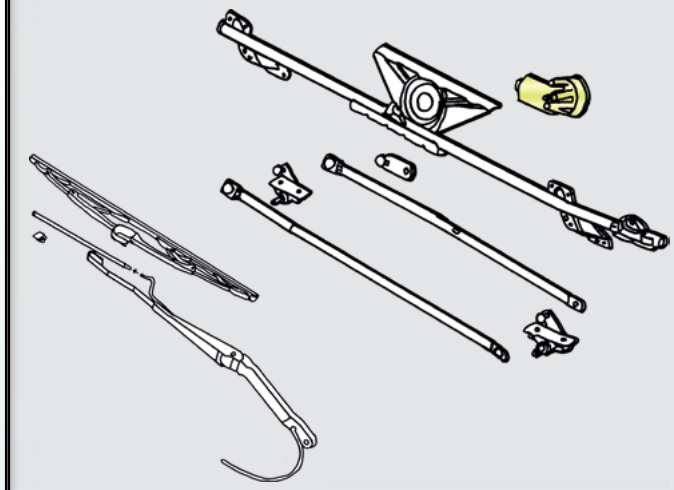

PR

→2028543
→5180860
→9122728
→3617502

→07/2007

94, 114, 124, 144, 164

→2009616
→5121637
→9092530
→3617502

→05/2005

New HD-structure:
HD-wiper motor has a new improved structure, which is developed after hours of testing in most extreme conditions.

Новая HD структура:
HD-мотор дворников имеет новую улучшенную структуру, которая является результатом многих часов тестирования в самых невообразимых условиях работы.

kg 1,8

318450

Link between bearings

ScR
1525890
1358288

LHD RHD

870 mm



kg 0,62

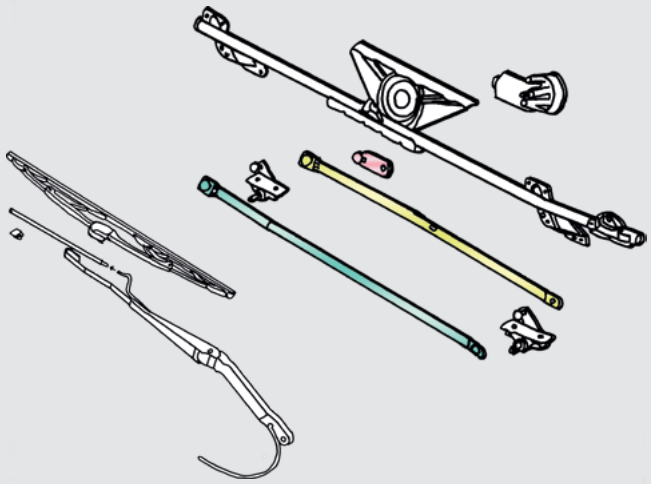

PR

→2028543 →5180860 →9122728 →3617502	→07/2007

94 - 164

→2009616 →5121637 →9092530 →3617502	→05/2005

318451

Link motor → left bearing

ScR
1525888
1358289

LHD RHD → ScR 1525889

765 mm



kg 0,56

318454

Link from motor

ScR 1525887
1358291

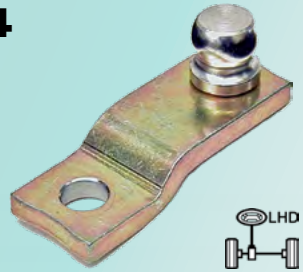

LHD RHD

kg 0,1

318452

Bearing

LHD RHD

kg 0,47

ScR

1525891
1337957

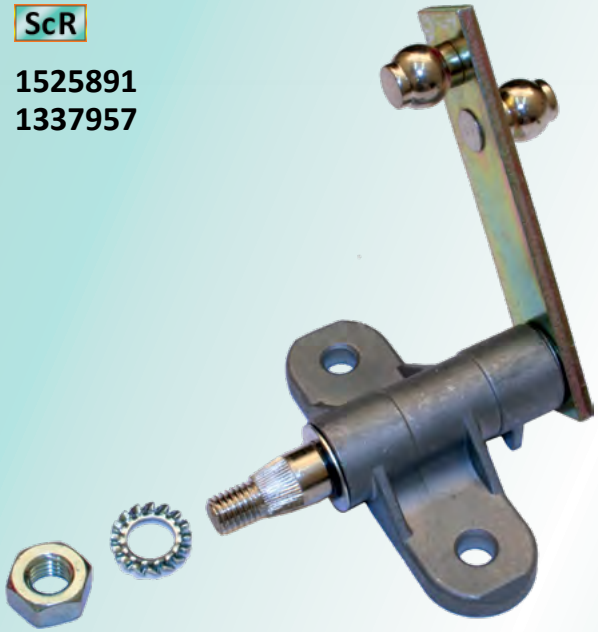

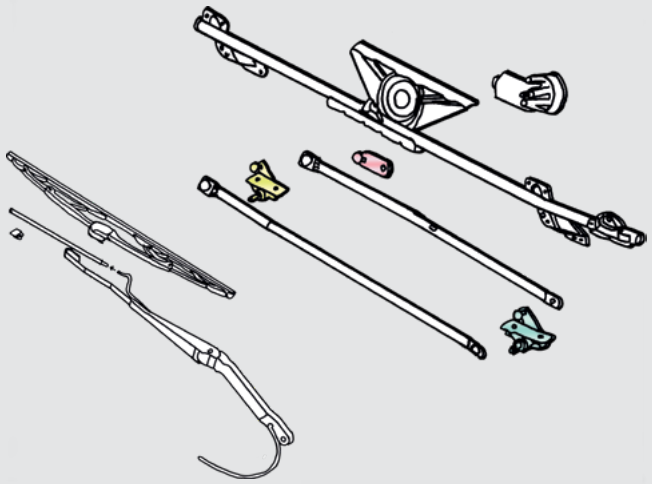

PR

→2028543
→5180860
→9122728
→3617502

→07/2007

94 - 164

→2009616
→5121637
→9092530
→3617502

→05/2005

318453

Bearing

LHD RHD

kg 0,45

ScR

1525892
1337958



318454

Link from motor

ScR 1525887
1358291

kg 0,1

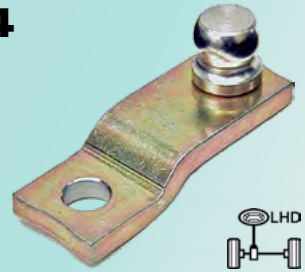

LHD RHD

318455

Wiper arm with nozzle kit

ScR

1864620 + ½ x **1800278**
1751403
1543076
1431177
1358285
1380034



kg 0,73

GPR 04/2004 - 2018
94 - 164 06/1995 - 12/2004

LHD

RHD = ScR 1864621 (1751404)

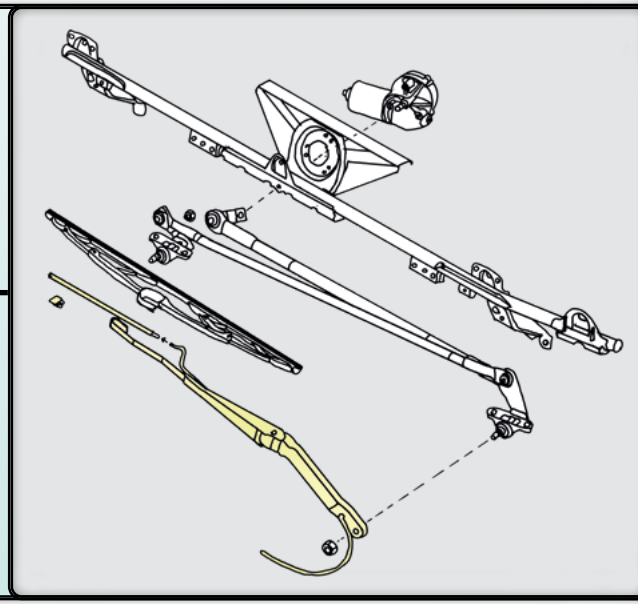

318457

Nozzle kit

ScR

1800278 ½
1545589 ½

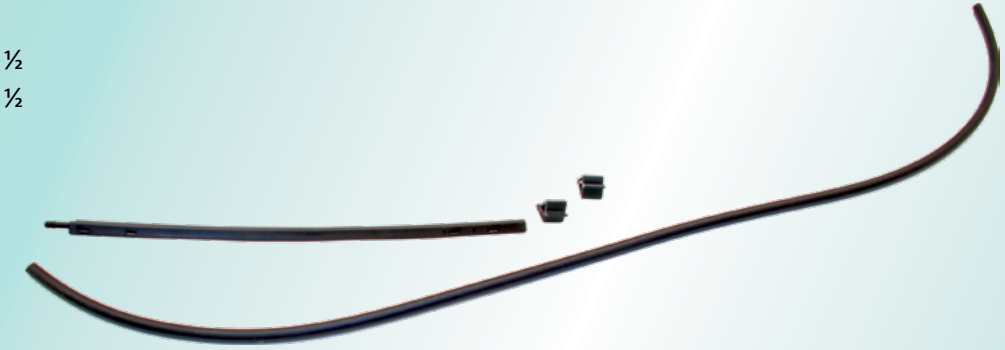

kg 0,05

GPR 04/2004 - 2018
94 - 164 06/1995 - 12/2004

LHD RHD

318456

Wiper blade 700 mm / 28"



T8 / 13,5 / 9x4 mm

N4 / 13,5 / 16,2 mm

ScR

2371926	with nozzle kit	HD 318457
2376325	with nozzle kit	HD 318457
1541106	with nozzle kit	HD 318457
1431178		
1380036		
1358287		
1780246	sa	
1450076	sa	

VoR

82485683
84035985
20826596
20537744
3944817
1606291
20826592
20537743
8189186





Scania: GPR, 94 - 164
Volvo: FL 7, FL 10
MB: Actros
MAN: TGA TGL TGM TGS TGX
Renault: Magnum

Suits with nozzle kit HD 318457 also:

Scania:	GPRS	08/2016 →
Volvo FH (4)		09/2012→
MB Actros	MP4	10/2011→ E 5/6
MB Antos		09/2012→

Reference numbers:

SWF	**132705** with nozzle
SWF	**132701** **132702**
Valeo	**728830**
Valeo	**TIR 703N**
Bosch	**3 397 018 170**
Hella	**SXW 862 059 -001**
Trico	**TX 700**

kg 0,37

HD wiper blade metal parts are made of Galvanized steel sheet and are coated by Dupont powder, which has a very good corrosion resistance and durability. The rubber parts are made of highest grade natural rubber and are coated with fluorine lubricant.
Their performance is excellent in winter conditions.

The fluorine lubricant coated rubber:

-reduces noise against the glass
-does not leave black stains on the windshield
-prevents the blade from freezing → -65°C
-extends blade lifetime

Корпус HD щетки дворников сделан из гальванизированных листов стали и покрыт пудрой Dupont, обладающей очень хорошей коррозийной стойкостью и повышающей срок службы детали. Резиновые части изготовлены из высшего сорта натурального каучука и имеют фторсодержащее смазочное покрытие.
Они отлично функционируют в зимних уловиях.

Фторсодержащее смазочное покрытие:

- уменьшает уровень шума
- не оставляет черных разводов на стекле
- противостоит замерзанию → -65°C
- действует весь срок службы щетки

318473

Old number: **118456**

Wiper blade 650 mm / 26"



T8 / 13,5 / 9x4 mm

N4 / 13,5 / 16,2 mm

VoR

84035947
20826591
20537740
8189631
8143709

Reference numbers:

SWF	**132650**
Valeo	**728827**
Valeo	**TIR 650N**
Bosch	**3 397 018 963**

Volvo:	FH, FM, FMX
MB:	Ateco, Axor
MAN:	TGA TGL TGM TGS TGX
Iveco:	Stralis, Trakker
Iveco:	Eurocargo, Eurotech

HD wiper blade metal parts are made of Galvanized steel sheet and are coated by Dupont powder, which has a very good corrosion resistance and durability. The rubber parts are made of highest grade natural rubber and are coated with fluorine lubricant.
Their performance is excellent in winter conditions.

The fluorine lubricant coated rubber:

-reduces noise against the glass
-does not leave black stains on the windshield
-prevents the blade from freezing → -65°C
-extends blade lifetime

Корпус HD щетки дворников сделан из гальванизированных листов стали и покрыт пудрой Dupont, обладающей очень хорошей коррозийной стойкостью и повышающей срок службы детали. Резиновые части изготовлены из высшего сорта натурального каучука и имеют фторсодержащее смазочное покрытие.
Они отлично функционируют в зимних уловиях.

Фторсодержащее смазочное покрытие:

- уменьшает уровень шума
- не оставляет черных разводов на стекле
- противостоит замерзанию → -65°C
- действует весь срок службы щетки

kg 0,34

318478

Wiper blade 1000 mm / 40"

Reference numbers:

Bosch	**3 397 018 199 N100**
SWF	**132000**
Valeo	**728834**
Valeo	**TIR 1000N**
Doga	**P100**

HD wiper blade metal parts are made of Galvanized steel sheet and are coated by Dupont powder, which has a very good corrosion resistance and durability. The rubber parts are made of highest grade natural rubber and are coated with fluorine lubricant.
Their performance is excellent in winter conditions.

The fluorine lubricant coated rubber:

-reduces noise against the glass
-does not leave black stains on the windshield
-prevents the blade from freezing → -65°C
-extends blade lifetime



kg 0,64

318479

Wiper blade 1000 mm / 40"

Reference numbers:

Bosch	**3 397 018 198 N101**
SWF	**132001**
Valeo	**728835**
Valeo	**TIR 1001N**
Trico	**TX1001**

Корпус HD щетки дворников сделан из гальванизированных листов стали и покрыт пудрой Dupont, обладающей очень хорошей коррозийной стойкостью и повышающей срок службы детали. Резиновые части изготовлены из высшего сорта натурального каучука и имеют фторсодержащее смазочное покрытие.
Они отлично функционируют в зимних уловиях.

Фторсодержащее смазочное покрытие:

- уменьшает уровень шума
- не оставляет черных разводов на стекле
- противостоит замерзанию → -65°C
- действует весь срок службы щетки



kg 0,70

318250

Lock bracket

ScR

1815227
1722438

Thickness of painted steel: 2,4 mm
Axle diameter: 8,8 mm

Material: Steel





kg 0,21

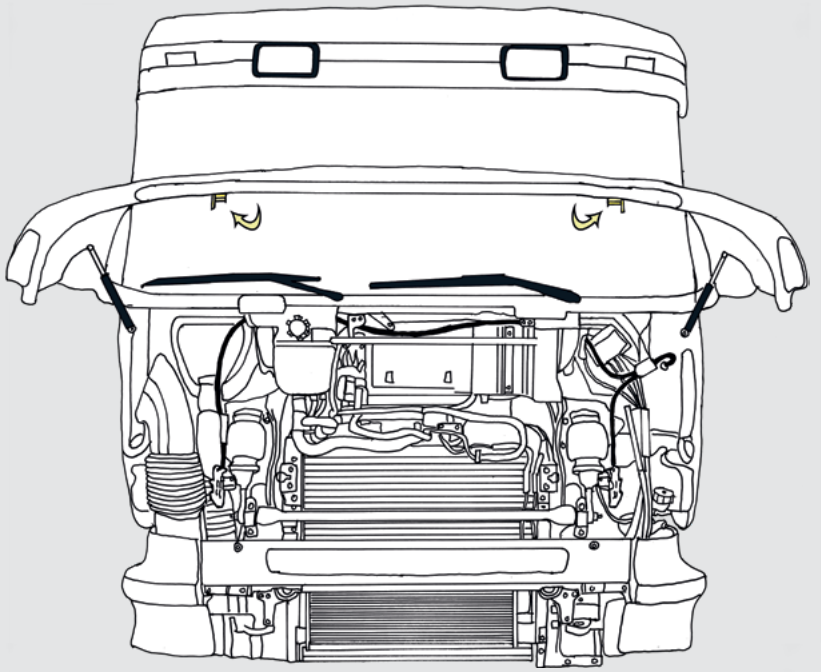

GPR

04/2004 - 2018

LHD RHD

318700

Bushing kit

ScR -

Developed by HD

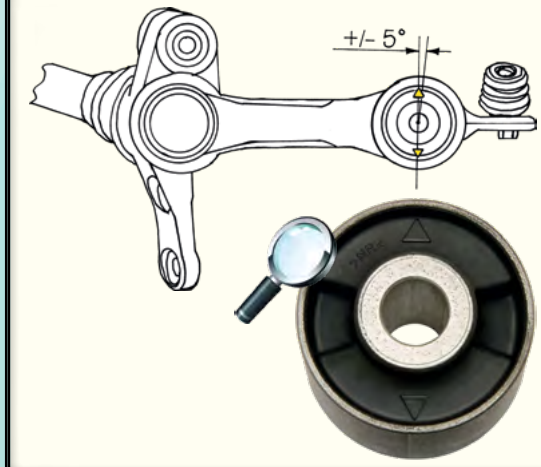

ScR
2250372
1394544
2157762
2129313

kg 0,7

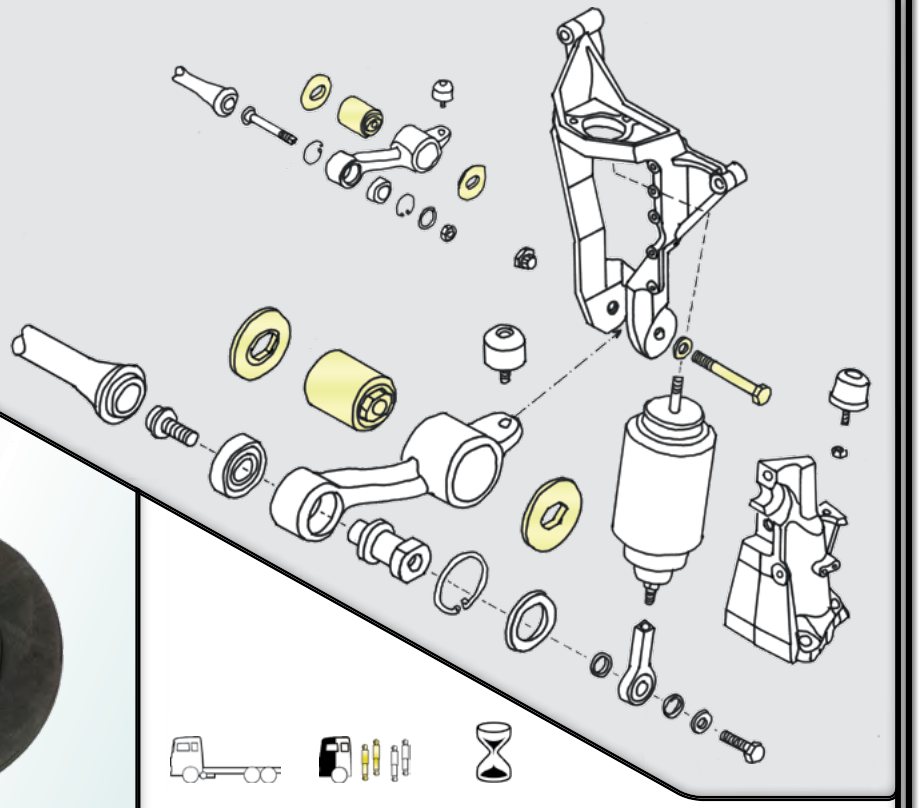

ScR
2183266
1385170

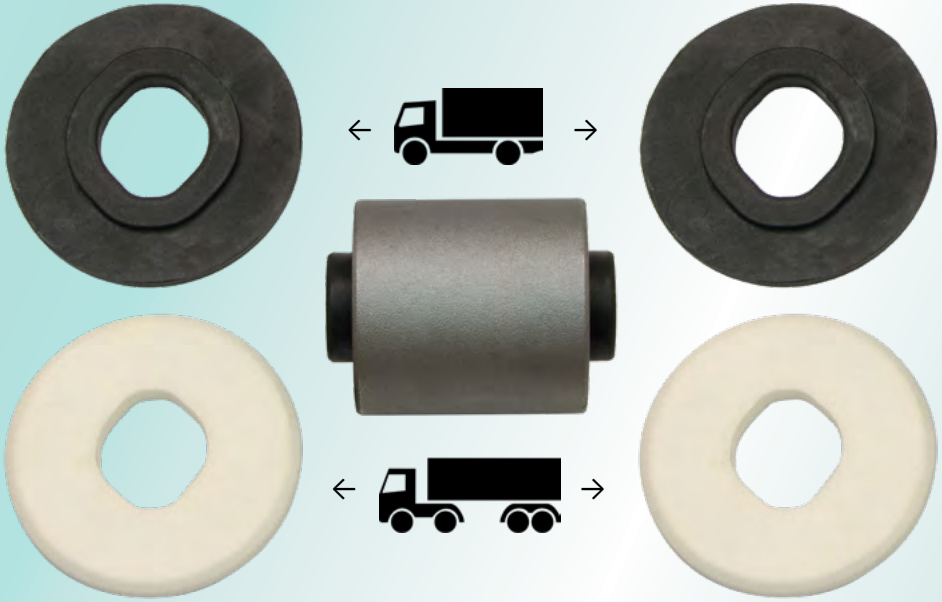

ScR
2183267
1782290



M16 x 2,0 x 120 mm

ScR 1394816



Ø 17/29,8 mm
3 mm

ScR 1775176

GPR 04/2004 - 2018
94, 114, 124, 144, 164 06/1995 - 12/2004

OE Scania kits:

ScR **2323493** → GPR
2 x 2250372 bushing & 4 x 2183266 side washer

ScR **2323494** → R
2 x 2250372 bushing & 4 x 2183267 side washer

2102698→ 5362935→ 9189502→ 3832892→
08/2014→

318717

Repair kit for torsion bar

ScR

1742449
1539498

2 x 318717 = 1742449



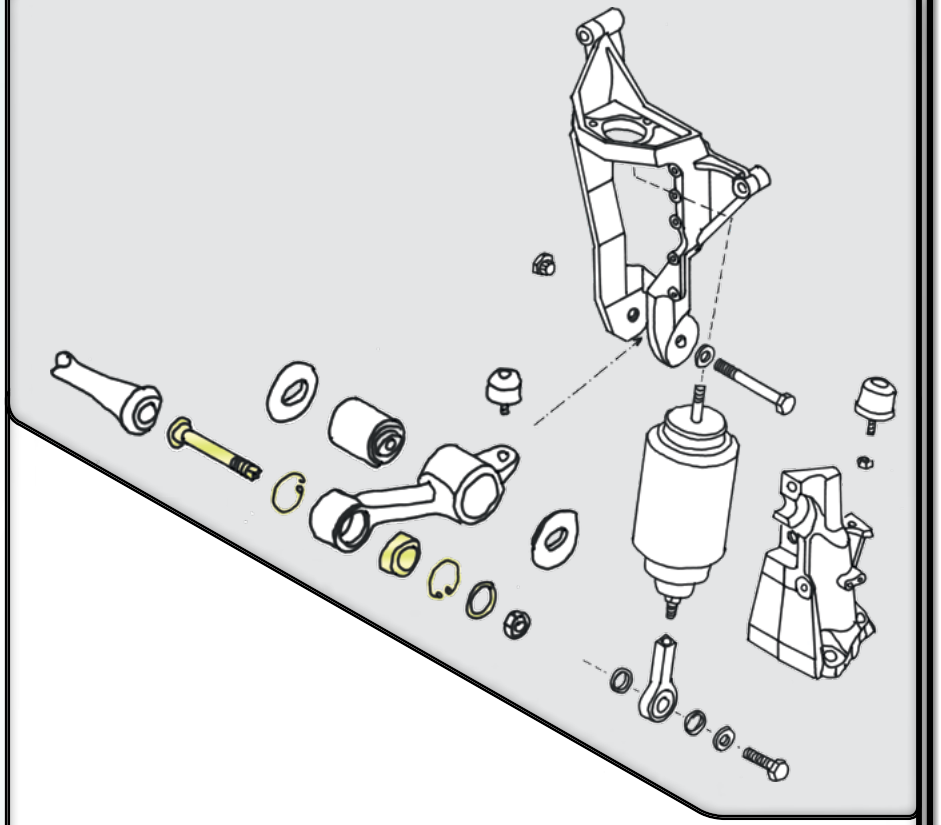

P		→03/2005	ScR 1747170, 1742448, 1416172
R		→03/2005	ScR 1747046, 1742447, 1444325
94 - 124	CP	→12/2004	ScR 1747170, 1742448, 1416172
94 - 164	CR	→12/2004	ScR 1747046, 1742447, 1444325

→2007953, →5122294, →9099216, →3571997

kg 0,71

Kit for newer anti-roll bars → ScR 318716

318716

Repair kit → torsion bar

ScR 1755638

2 x 318716 = 1755638

ScR 1768269

ScR 1324713





ScR 804831
Ø 52,2 x 56,2 x 37,9 mm
Retaining ring



ScR 1324712
Ø 36 x 52 x 7 mm
NBR seal

kg 0,54

Kit for older anti-roll bars → **ScR** 318717

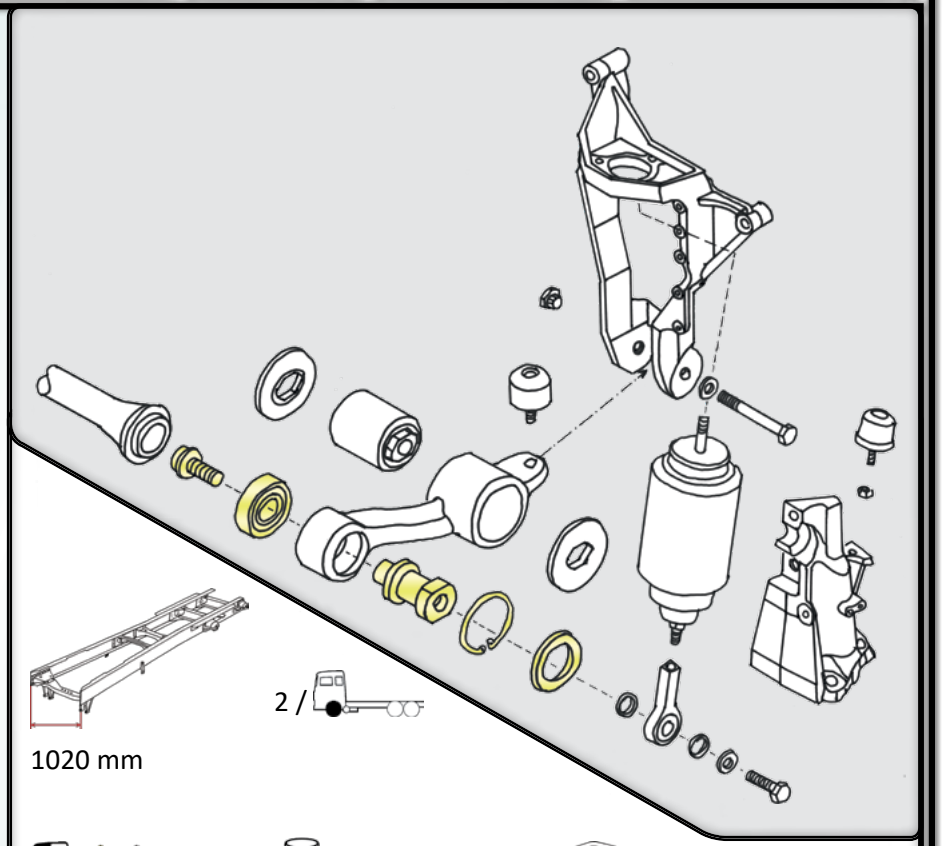

2 /

1020 mm

		ScR
G	04/2008 - 2018	1768270, 1745315 2109838, 1776611 extra heady duty 1776610 sla
P	04/2005 - 2018	1768271, 1745316 2109838, 1776611 extra heady duty 1776610 sla
R	04/2005 - 2018	1768270, 1745315 2109838, 1776611 extra heady duty 1776610 sla
94 - 164	1994 - 2008	1768270, 1745315, 1747046 1768271, 1745316

318721

Bump stop → Cabin suspension, front

ScR

1349810
1899632

HD-material:
EPDM-rubber
-50°C - +150°C

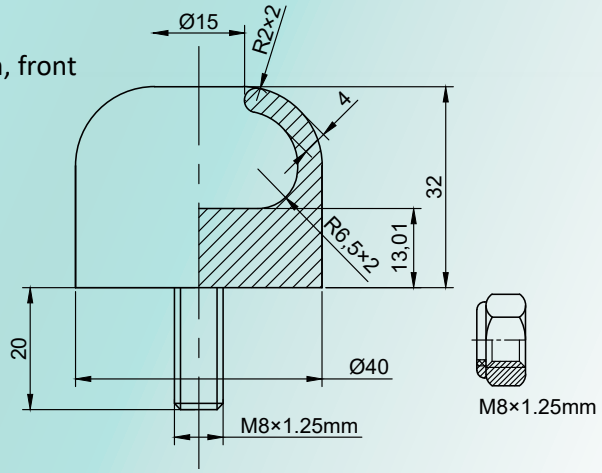

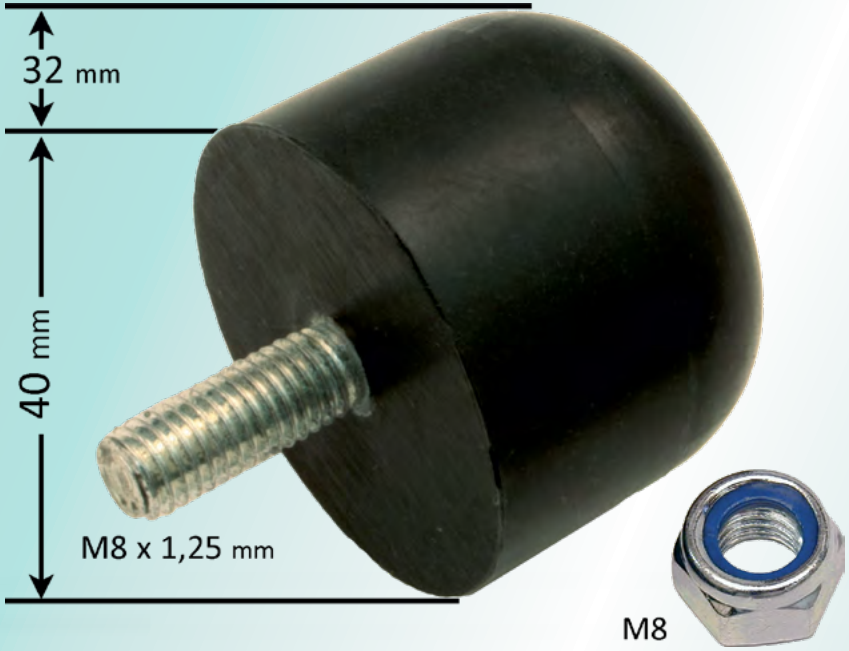

kg 0,07

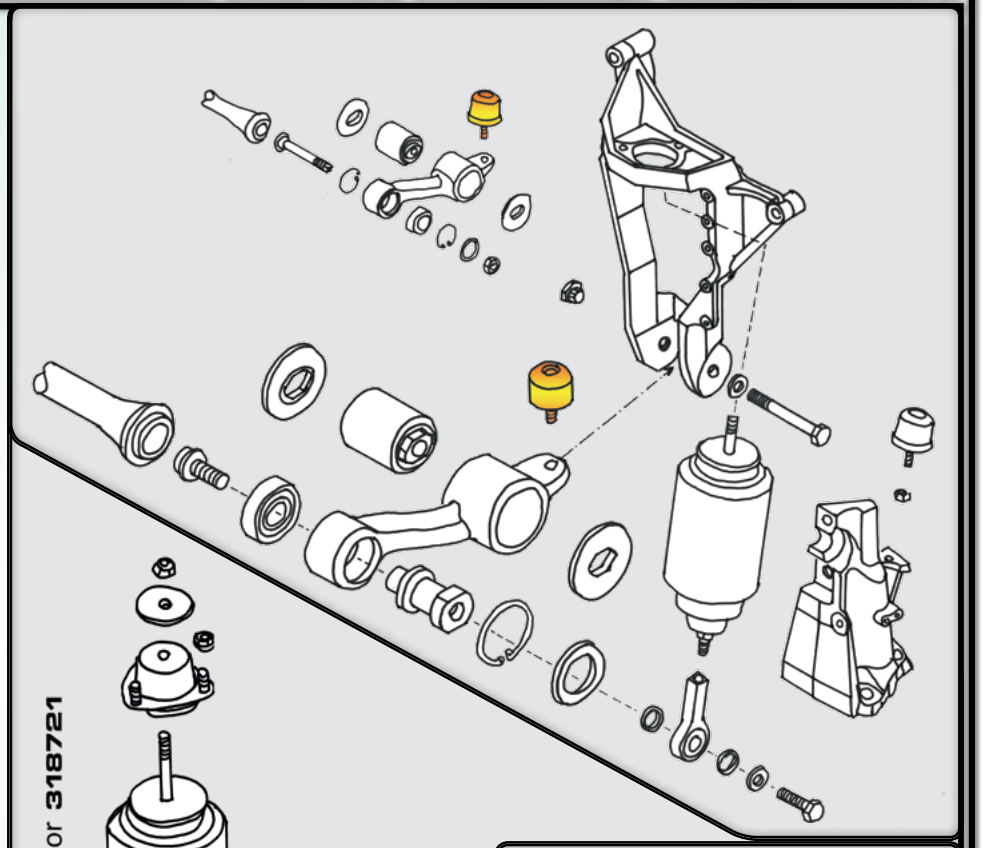

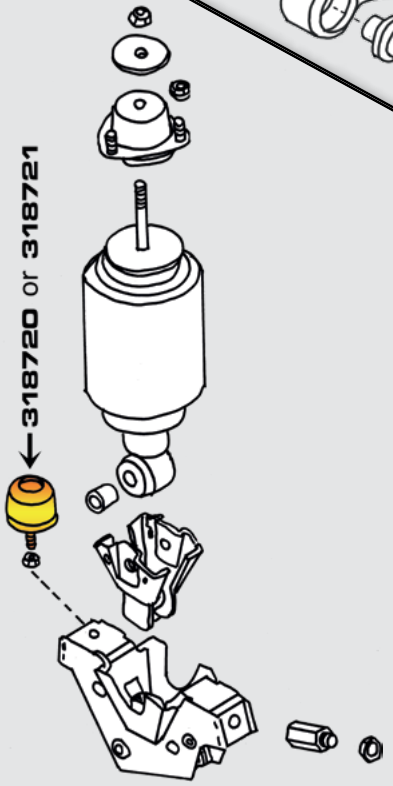

Suitable for many different suspension configurations.

GPR	04/2004 - 2018
94 - 164	06/1995 - 12/2004

318720

Bump stop → Cabin suspension, front

ScR

2470166	40 mm
2154867	46 mm
1923654	
1349805	

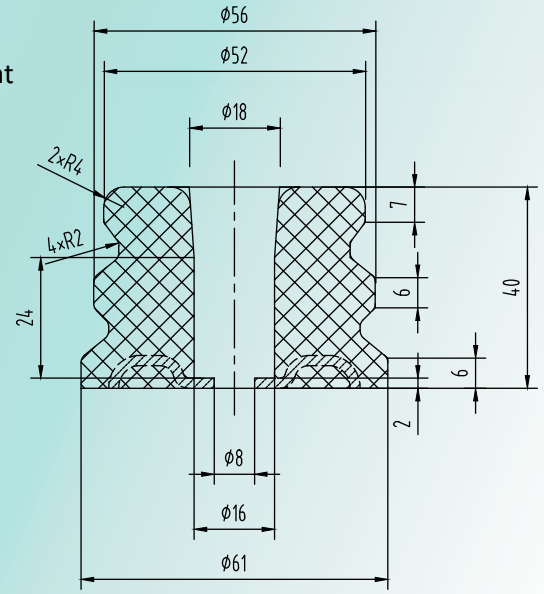

HD-material:
EPDM-rubber
-50°C - +150°C



M8 x 1,25 x 25 mm

M08

kg 0,15

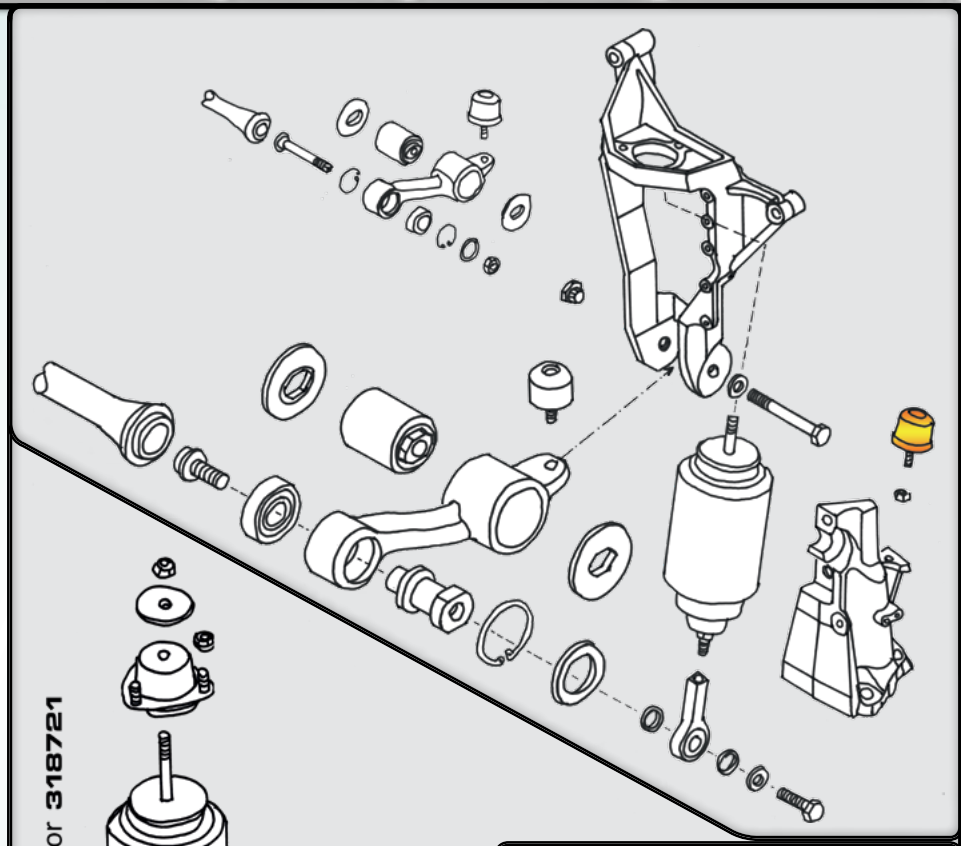

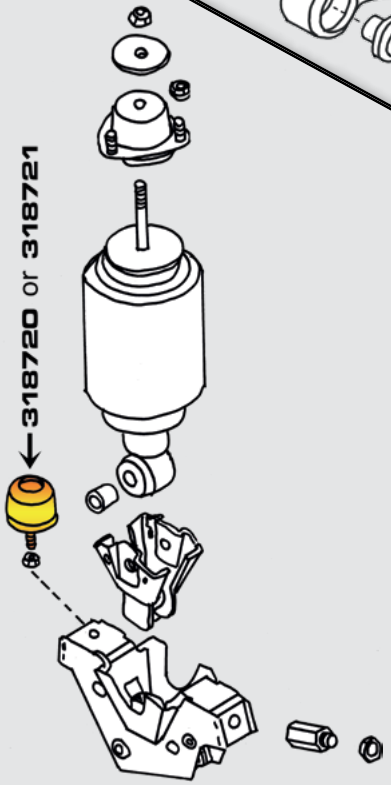

Suitable for many different suspension configurations.

GPR	04/2004 - 2018
94 - 164	06/1995 - 12/2004

318770

Rotating head with bolt

ScR 2171717

2109767 + 2025680

Replaces:

HD

318760

ScR

2171712
1744210
1504160
1443114
1364293

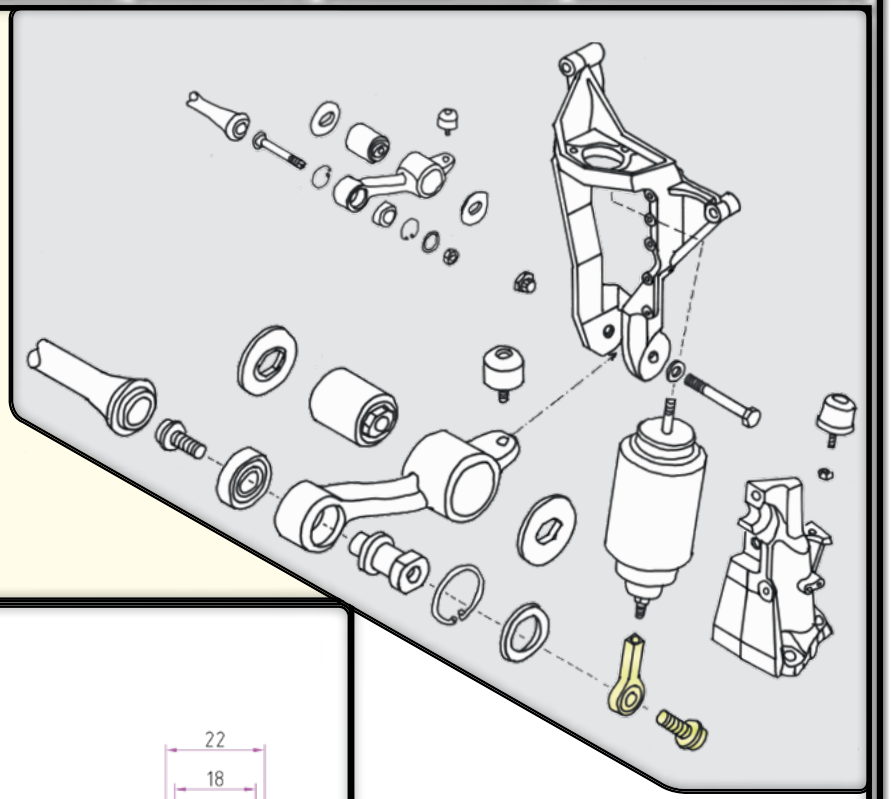



ScR 2109767



ScR 2025680

M16 x 2,0 x 40 mm

kg 0,27

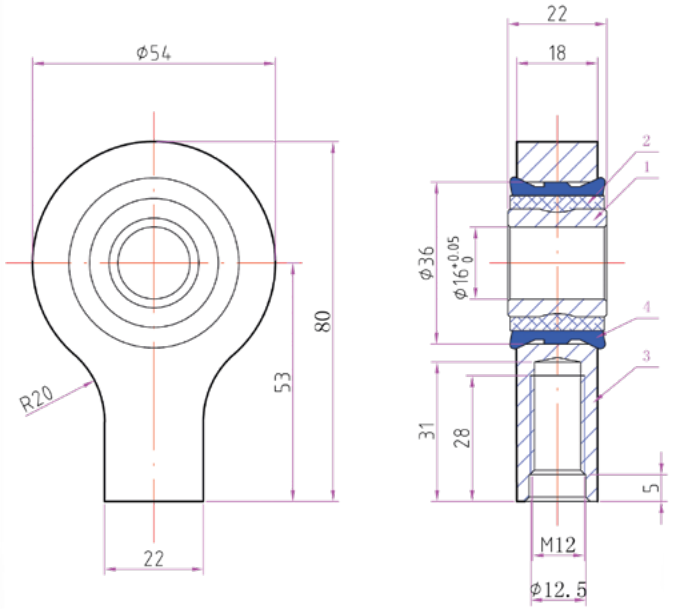

P	CP	09/2004 - 2018
94-164	CP/CR/CT	06/1995-12/2004
114-164	CT	09/1995-12/2004

Materials:

Body	(3): Aluminium
Bushing	(1): Steel
Ring	(2): Nylon
Seal	(4): SBR rubber

318775

Rotating head with bolt

ScR 2171715

2094316 + 2025680

Replaces:

HD

318765

ScR

2171713
1744211
1426202

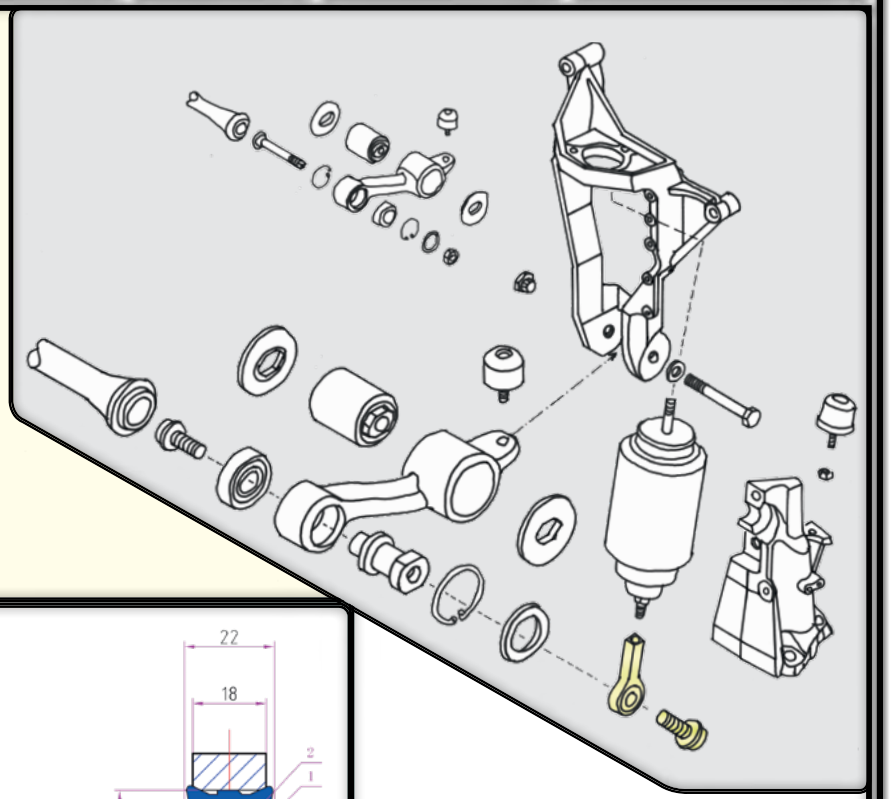



ScR 2094316



ScR 2025680

M16 x 2,0 x 40 mm

kg 0,31

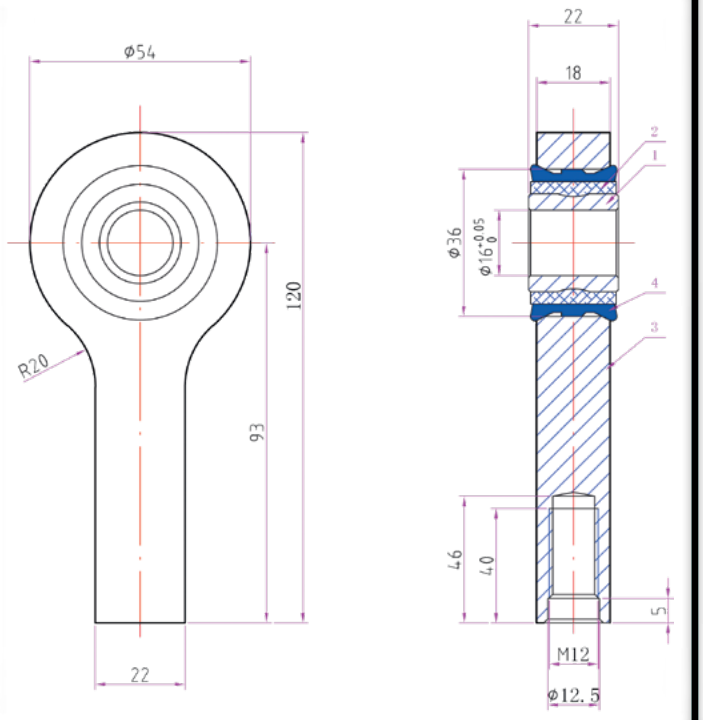

R	CR 16/19	2004 - 2018
G		2008 - 2018

Materials:

Body	(3): Aluminium
Bushing	(1): Steel
Ring	(2): Nylon
Seal	(4): SBR rubber

318597

Ball pin → Cabin suspension

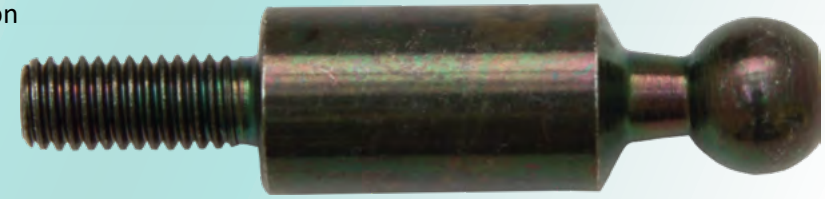

ScR

1524624
1439826

GPR 2004 → 09/2013

CP14 CG/CP/CR 16/19 + Crew cab

→2090504 →5332800 →9179156 →3846666

Info only:

Ball pin → CG14 ScR 1524623, 1372522

Ball pin → CP14 / CR16 High ScR 1854147, 1747668

Material:
Steel SAE 1045

kg 0,015

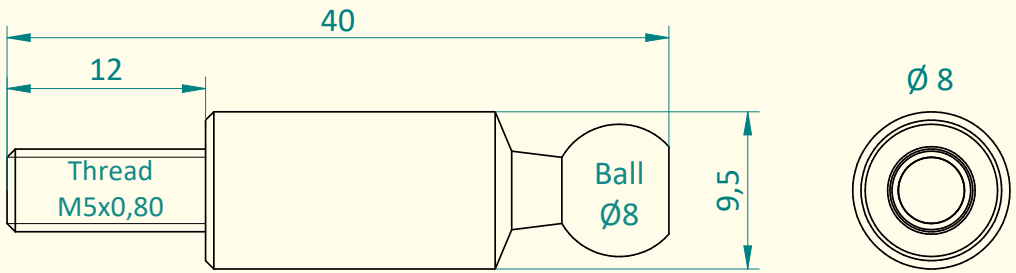

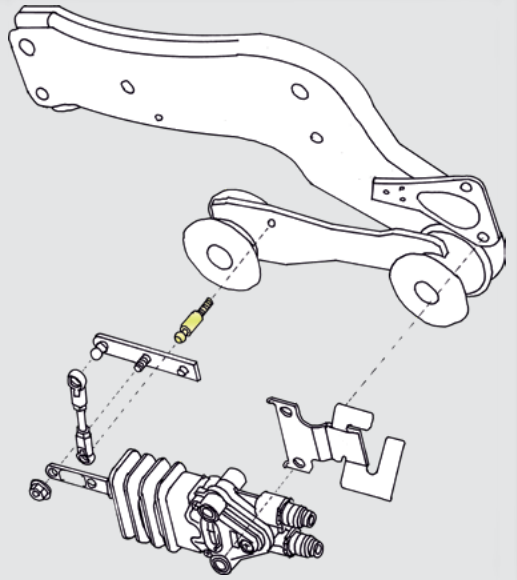

318596

Ball pin

ScR

2387355
1524623
1372522



kg ?

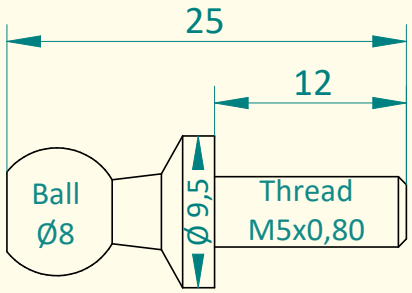

LPGRS 09/2016→

318560

Sensor with fittings → Cabin level

ScR 2093357

ScR Kit references:

2262871
2262873
2263456

ScR 2454421

Reference numbers:

Wabco **464 007 814 0**
Wabco **464 007 034 0**

Materials:

Valve body: Aluminium
Fittings: Brass

Fittings info:

HD 315000 →

Replaces Raufoss reference:
931 40 010
Color code: white

Threads: M10 x 1,0 mm

kg 0,51



→ ScR 2093357



With these fittings HD 318560 replaces ScR 2093357

→ ScR 2454421



With these fittings HD 318560 replaces ScR 2454421

LPGRS 08/2016→

GPR 05/2013 - 2018

2087765→ sss 5324358→ snl
9176848→ san 3836972→ sla

CG 14/16/19 CR 16/19 crew cab

CG 14/16/19 CR 16/19 crew cab CP 14/16

318729

Installation kit → Cabin level sensor

ScR

1374691 x 1
1391686 x 1
1343144 x 3
M10x1,0 mm x 1

VoR

980080 x 1
981478 x 1
981174 x 3
M10x1,0 mm x 1



Material: Brass

→ Tube Ø 6 mm

Threads: M10 x 1,0 mm

kg 0,16

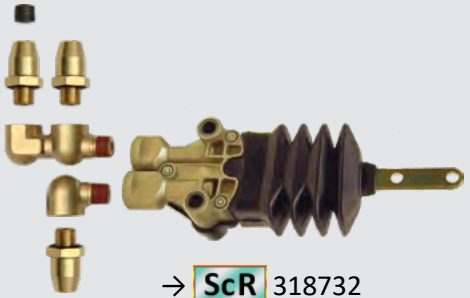

→ ScR 318732
→ VoR 118730
→ VoR 118731

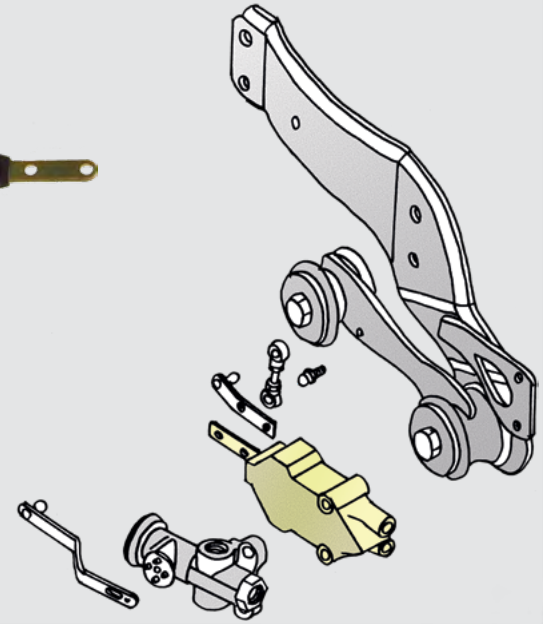

GPR →05/2013

→2087764 →5324357 →9176847 →3836971

94 - 164 1994 - 2008

FH	09/2005 - 09/2012
FH 12/16	1995 - 09/2005
FM	09/2005 - 09/2012
FM 9/12	09/2003 - 09/2005
FM 7/10/12	1998 - 09/2003

318732

Sensor → Cabin level

ScR

1430545
1399776
1372512
2093357 (with fittings)

ManR **N2.50999-0136**

Renault R **5021170191**

DAF R **1504925**

Reference numbers:

Wabco **464 007 010 0**



M10 x 1,0 mm

M10 x 1,0 mm

kg 0,35

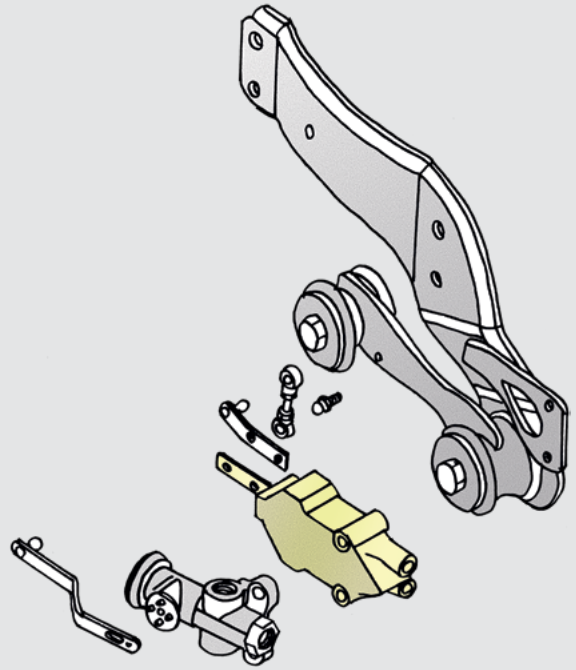

GPR

→2087764 →05/2013

→5324357, →9176847, →3836971

94, 114, 124, 144, 164

94, 114, 124, 144, 164

94, 114, 124, 144, 164

→1243899 →4400139 →9036061 →3508953

1280018→ 4471116→ 9069755→ 3533536→

Newer valve

HD 318560



318561

Sensor → Cabin level

ScR **2093356**

ScR Kits:

2262867
2263455

Contains:
- Valve
- Fittings

Ei ole mallia kuvattavaksi

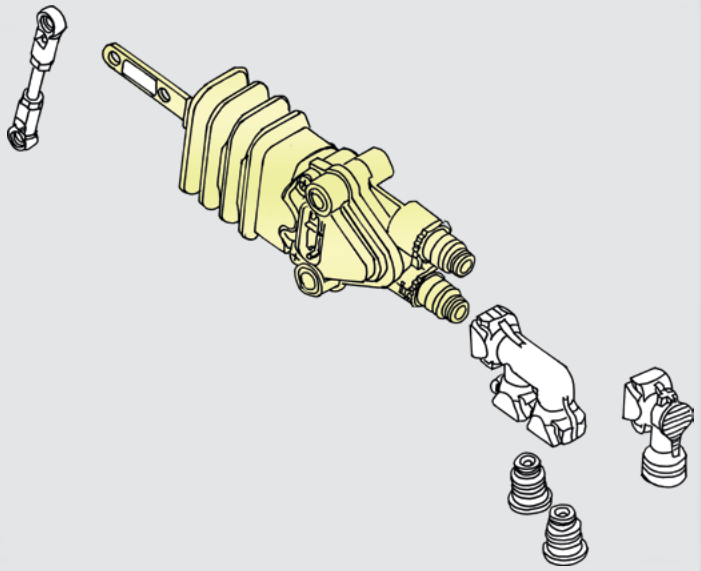

GP CG, CP 05/2013 - 2018

2087765→ 5324358→ 9176848→ 3836972→

RHD 1020 mm

GR CG, CR 05/2013 - 2018

2087765→ 5324358→ 9176848→ 3836972→

Older valve → HD 318732



kg ?

318571

ScR 2171710
2016078

Lever → Sensor valve, Front



kg 0,08 Material: Steel

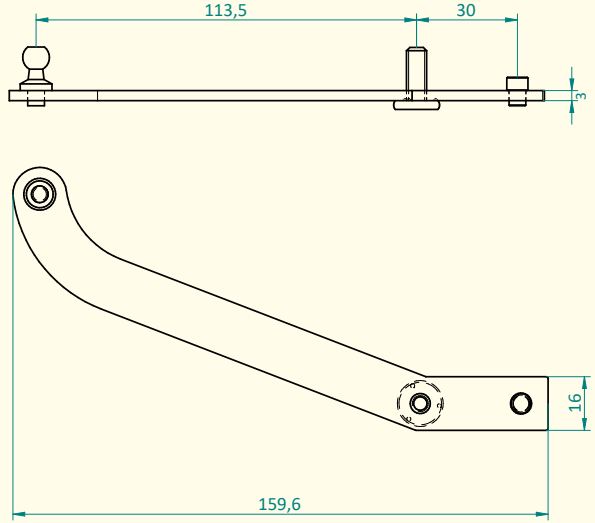

GR LHD 2004 → 10/2016

→5444875 →9215714 →3898171

1020 mm Chassis front end width

318578

ScR 2475757

Lever → Sensor valve, Front

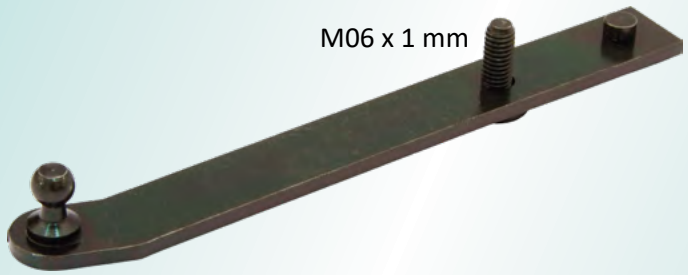

kg 0,07 Material: Steel

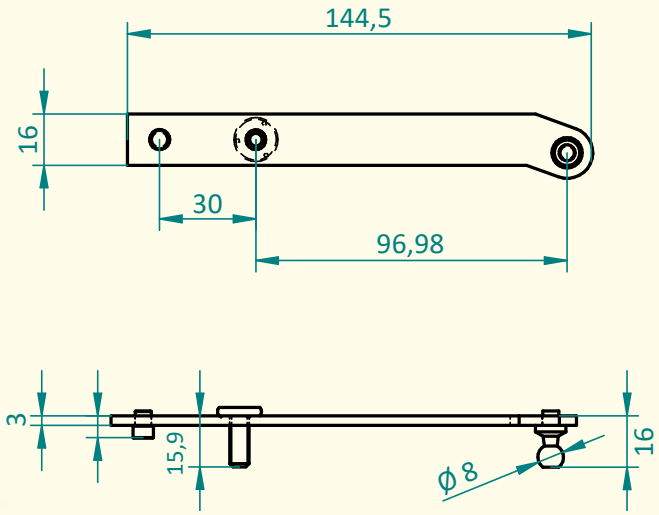

GR LHD 10/2016→

5444876→ 9215715→ 3898172→

1020 mm Chassis front end width

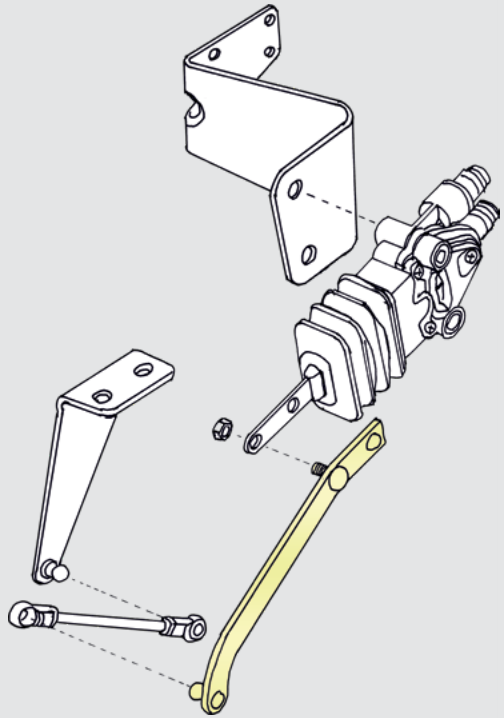

318572

Lever → Sensor valve, Rear

ScR 1546492 1523568



kg 0,03 Material: Steel

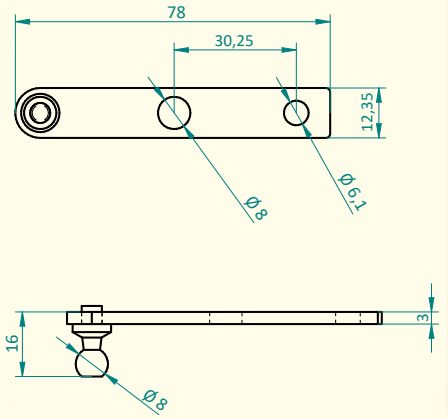

GPR 2004 - 05/2013

CP/CG 14/16/19 CR 16/19

→2087764
→5324357
→9176847
→3836972

318573

Lever → Sensor valve, Rear

ScR 2171711



kg 0,04 Material: Steel

This part not available

GPR 05/2013 - 09/2013

CP/CG 14/16/19 CR 16/19

2087765 - 2090504
5324358 - 5332800
9176848 - 9179156
3836972 - 3846666

318574

Lever → Sensor valve, Rear

ScR 2209329



kg 0,02 Material: Steel

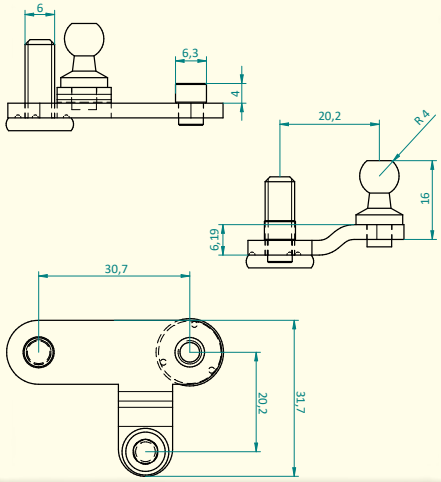

GPR 09/2013 - 2018

CP/CG 14/16/19 CR 16/19

2090505→
5332801→
9179157→
3846667→

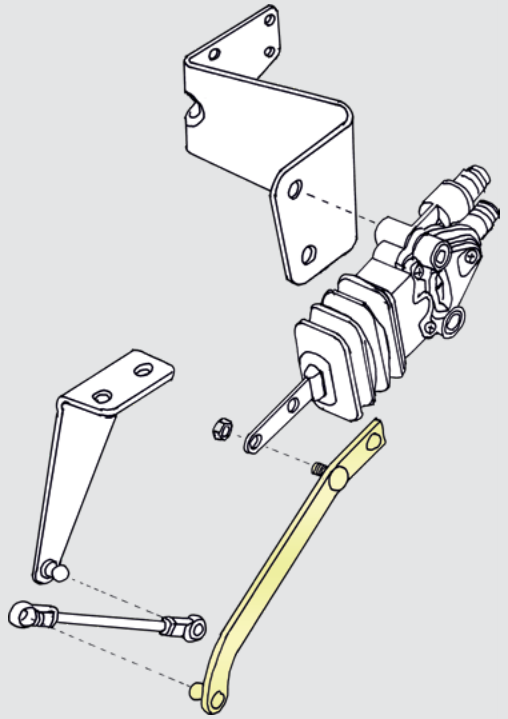

318590

Bracket → Sensor valve, Front

ScR 1867370



kg 0,13 Material: Steel SAE 1006/1008

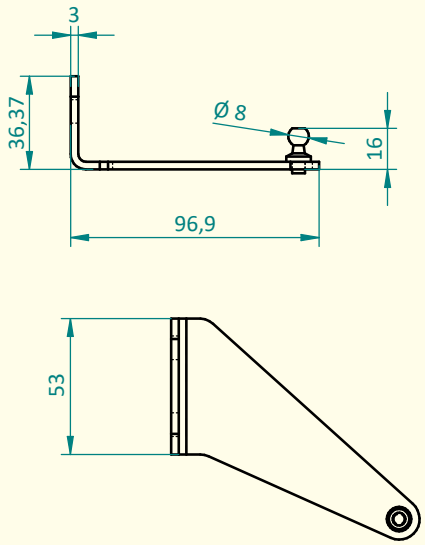

GR 2004 → 10/2016

→5444875 →9215714 →3898171

Chassis width: CG 1020 mm CG/CR 1140 mm

318591

ScR 2446920

Bracket → Sensor valve, Front

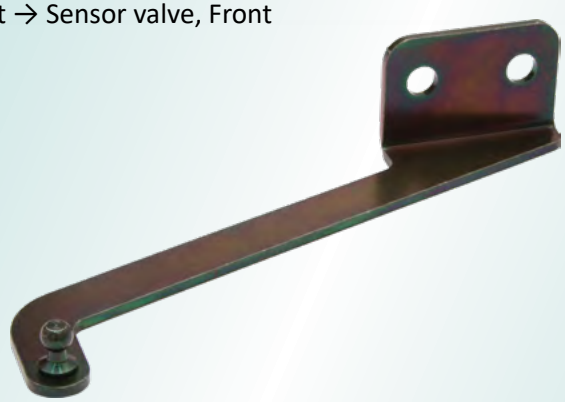

kg 0,13 Material: Steel SAE 1006/1008

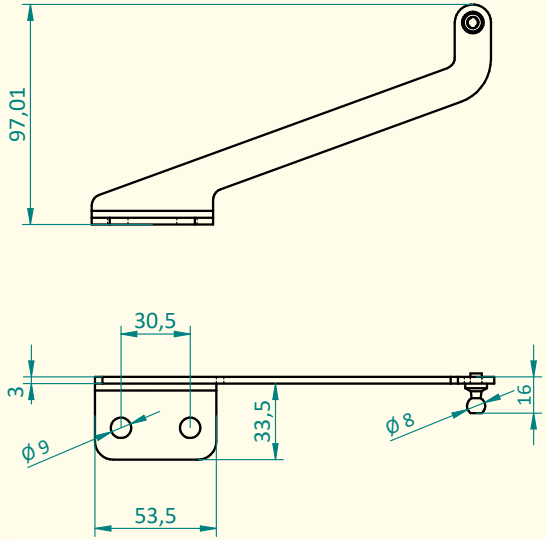

GR 10/2016 → 2018

5444876→ 9215715→ 3898172→

Chassis width: CG 1020 mm CG/CR 1140 mm

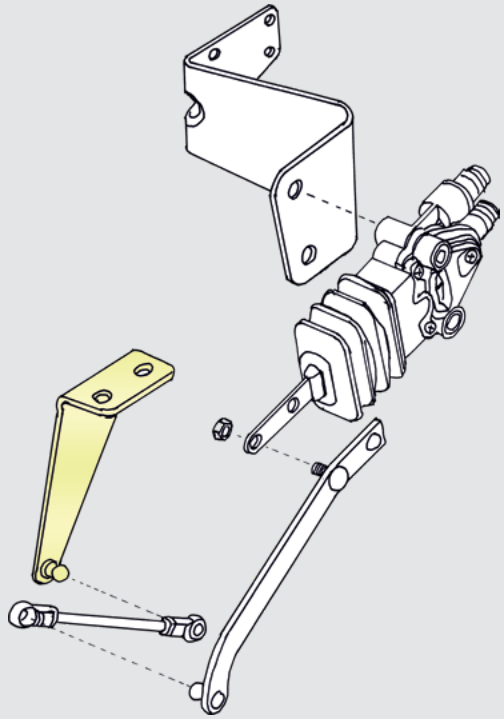

318581

Bracket → Front cab level sensor

ScR **1788244**

Ball: Ø 8 mm

2 x holes Ø 9,3 mm

Material:
Steel

Coating:
Black paint

kg 0,08

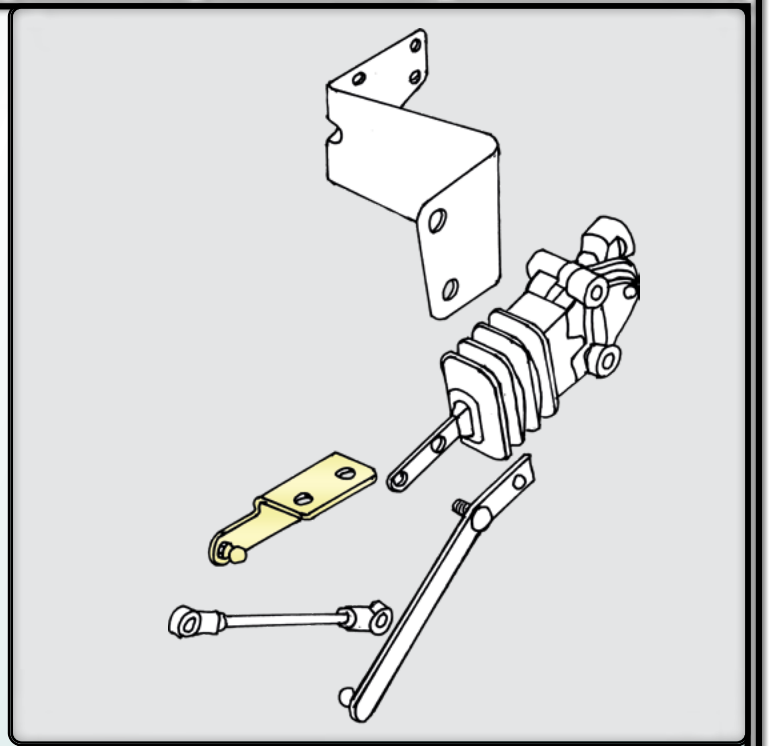

R CR 2004 → 10/2016
→5444875 →9215714 →3898171
1020 mm, 1140 mm Chassis front end width
LHD

G CG 2007 → 10/2016
→5444875 →9215714 →3898171
1140 mm Chassis front end width
LHD

318575

Bracket → Front cab level sensor

ScR **1865971**

2 x Threads: M08 x 1,25 mm

Material:
Steel

Coating:
Black paint

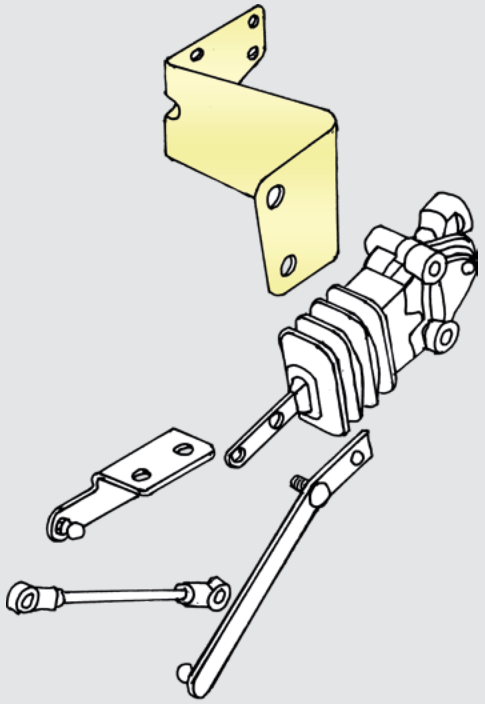

R	2004 → 10/2016	CR
G	2007 → 10/2016	CG

→5444875 →9215714 →3898171

0,33

318734

Link 150 mm

ScR

2000089
1386423



2 /

kg 0,02

318735

Link 80 mm

ScR

2000090
1386424



2-4 /

kg 0,01

318736

Link 75 mm

70 mm ScR 1875809

65 mm ScR 1372510

ScR

2000091
1875809
1413151
1372510



2 /

kg 0,01

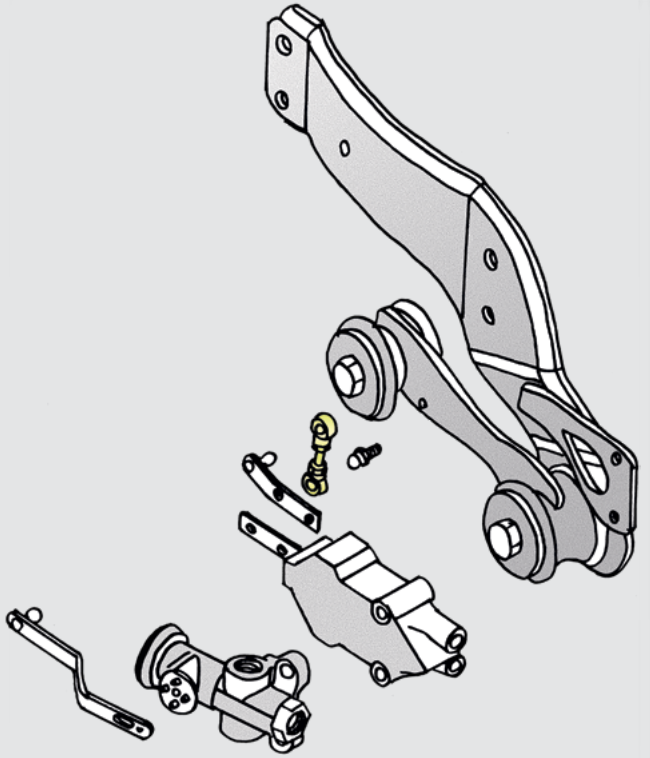

GPR 2004 - 2018

94, 114, 124, 144, 164

318550

Intermediate rod 153 mm CR 9/2016 →

ScR **2472351**

Rod length:
153 mm (without heads)

Rod material:
Steel

Threads:
M05 x 0,8 mm
18/44 mm



Heads:
Short + long

Heads material:
Plastic

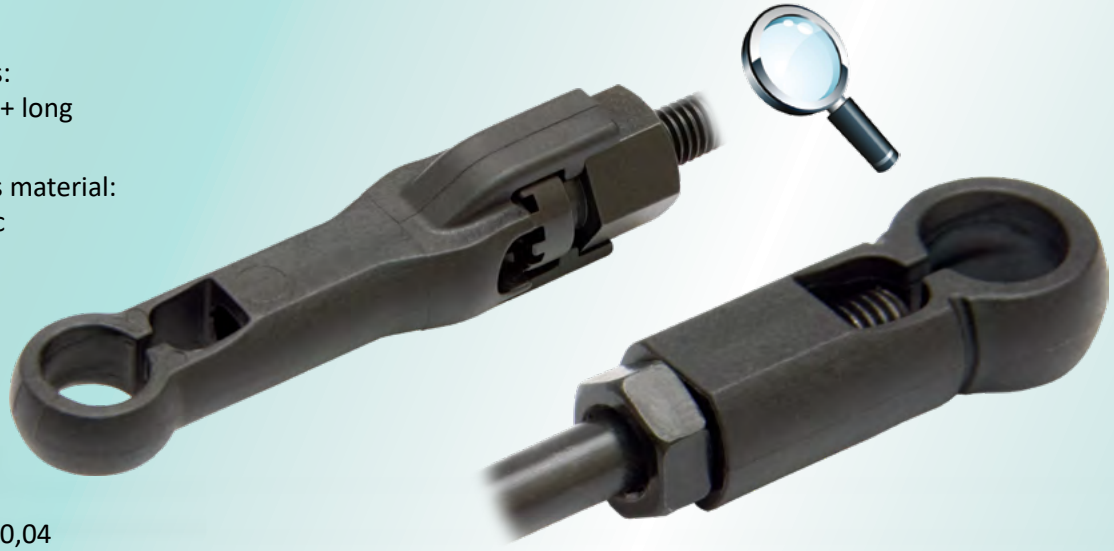

kg 0,04

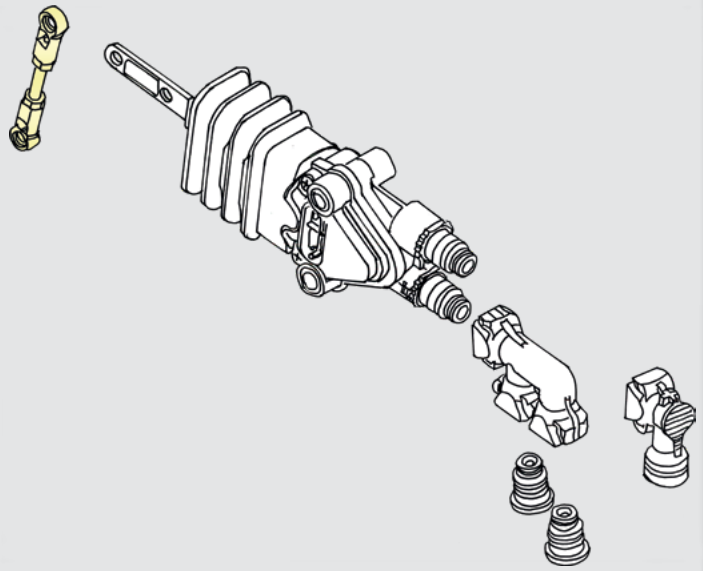

R	09/2016 →	CR	

LPGRS	09/2016 →	CLPGRS	

318551

Intermediate rod 304 mm CS 9/2016 →

ScR **2485416**



Rod length:
304 mm (without heads)

Rod material:
Steel

Threads:
M05 x 0,8 mm
18/45 mm

Heads:
Short + long

Heads material:
Plastic

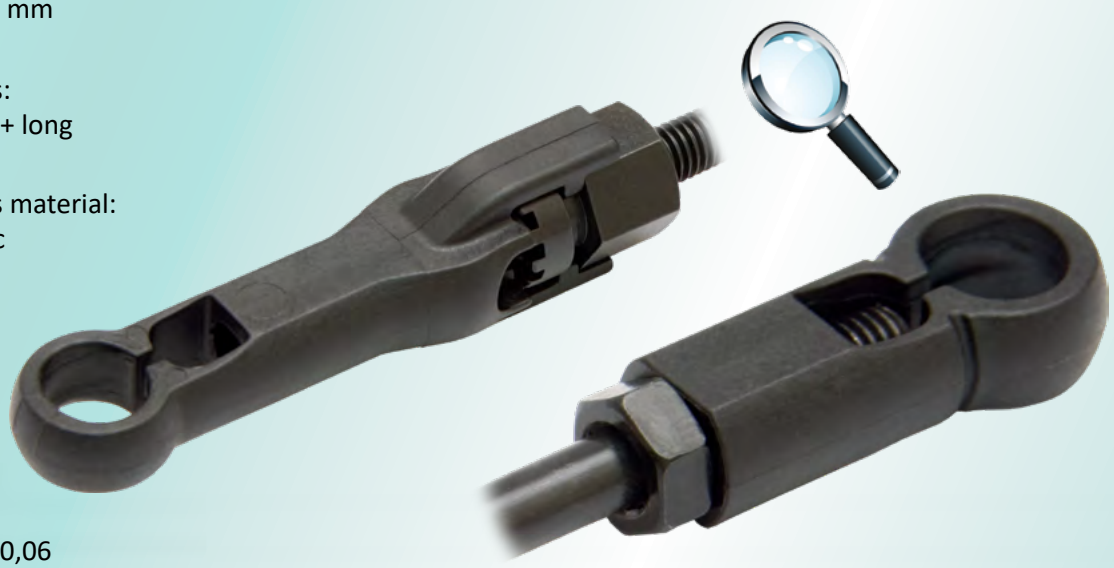

kg 0,06

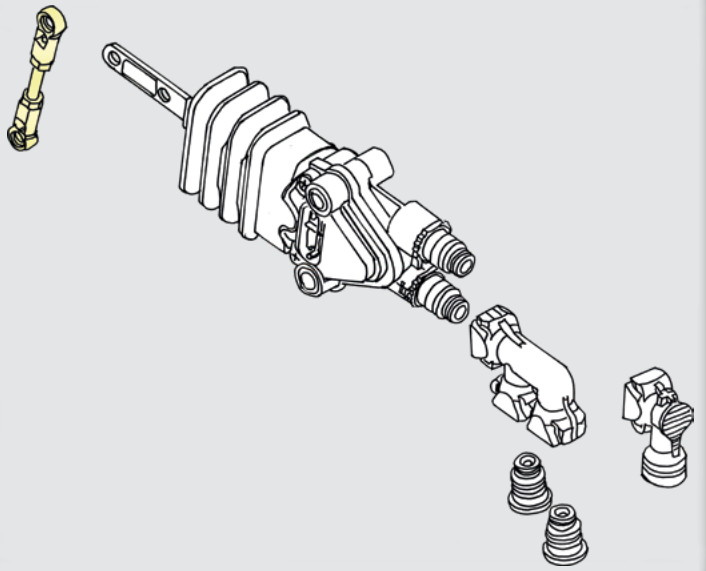

S	09/2016 →	CS	

318552

Intermediate rod 89 mm CG 9/2016 →

ScR **2472348**

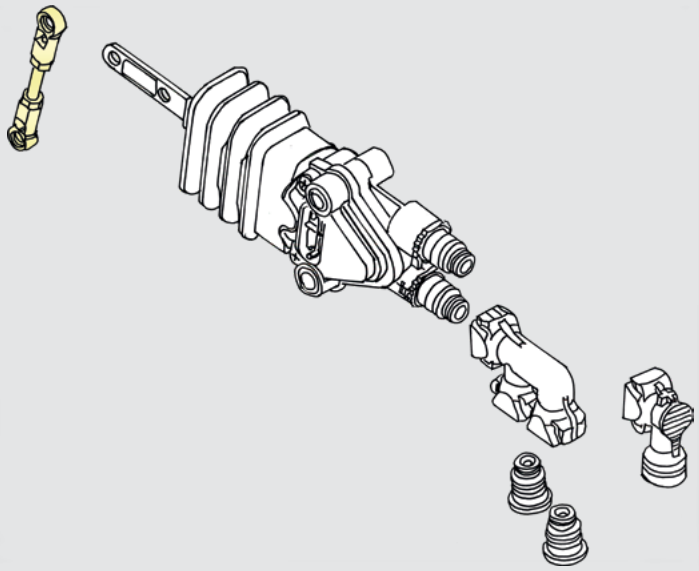

Rod length:
89 mm (without heads)

Rod material:
Steel

Threads:
M05 x 0,8 mm
18/45 mm

Heads:
Short + long

Heads material:
Plastic



kg 0,03

G	09/2016 →	CG	

318553

Intermediate rod 65 mm CL/CP 9/2016 →

ScR **2540855**

Rod length:
65 mm (without heads)

Rod material:
Steel

Threads:
M05 x 0,8 mm
Full thread

Heads:
Short + long

Heads material:
Plastic



kg 0,02

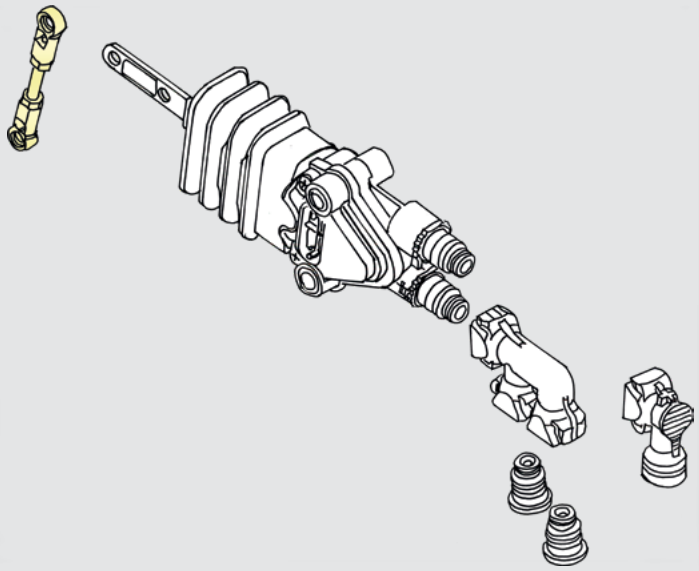

L P	09/2016 →	CP CL	

318565

Intermediate rod 50 mm CP →2018

ScR

1875805
1524614

Rod length:
50 mm (without heads)

Rod material:
Steel

Threads:
M05 x 0,8 mm
20 mm LHT
20 mm RHT

Heads:
Cup

Heads material:
Steel



kg 0,03

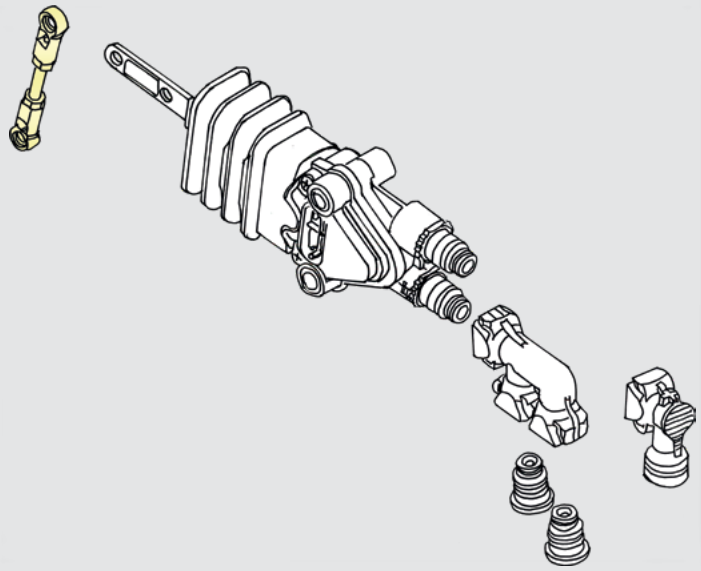

P	05/2013 - 2018	CP	
	2087765→ 5324358→ 9176848→		

Latin America produced vehicles:

P	04/2007 - 2018	CP	
G	08/2013 - 2018	CG	RHD

Chassis front end width 1020 mm

318566

Intermediate rod 198 mm CG/CP/CR →2018

ScR **2246112**

Rod length:
198 mm (without heads)

Rod material:
Steel

Threads:
M05 x 0,8 mm
20 mm LHT
20 mm RHT

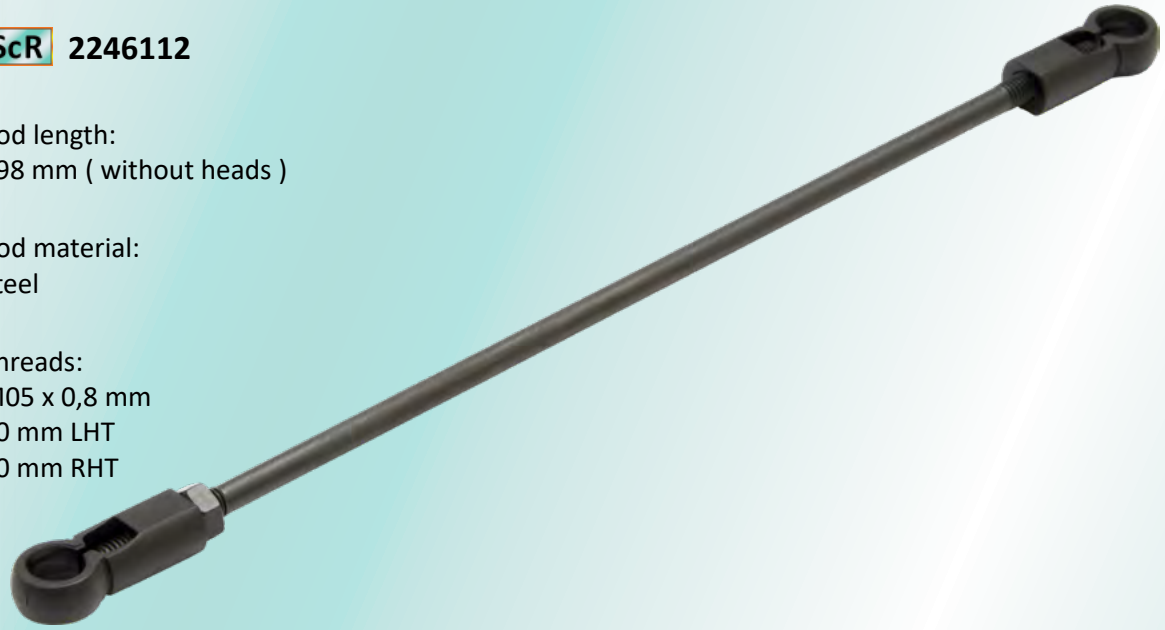

Heads:
Short

Heads material:
Plastic



kg 0,04

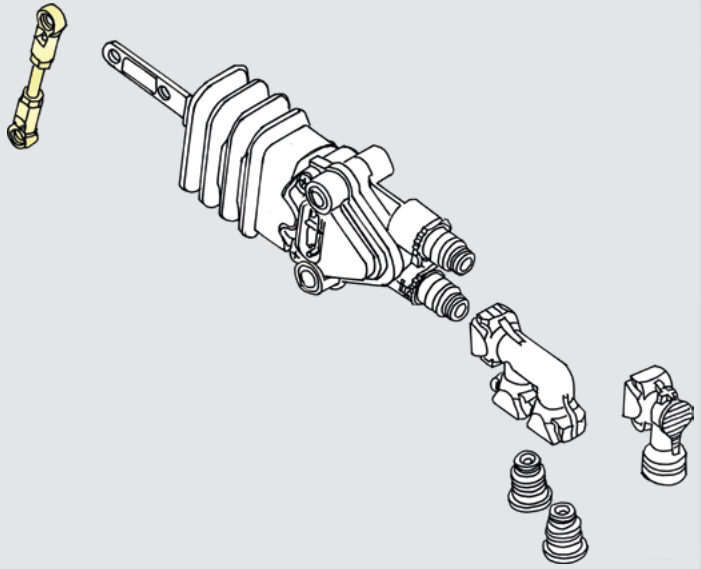

G	09/2013 - 2018	CG 14/16/19
P	09/2013 - 2018	CP 14/16
R	09/2013 - 2018	CR 16/19
Crew cab	09/2013 - 2018	

2090505→
5332801→
9179157→
3846667→

318567

Intermediate rod 198 mm CG/CP/CR →2018

ScR

2266344
2186666

Rod length:
198 mm (without heads)

Rod material:
Steel



Threads:
M05 x 0,8 mm
20 mm LHT
20 mm RHT

Heads:
Cup

Heads material:
Steel



kg 0,05

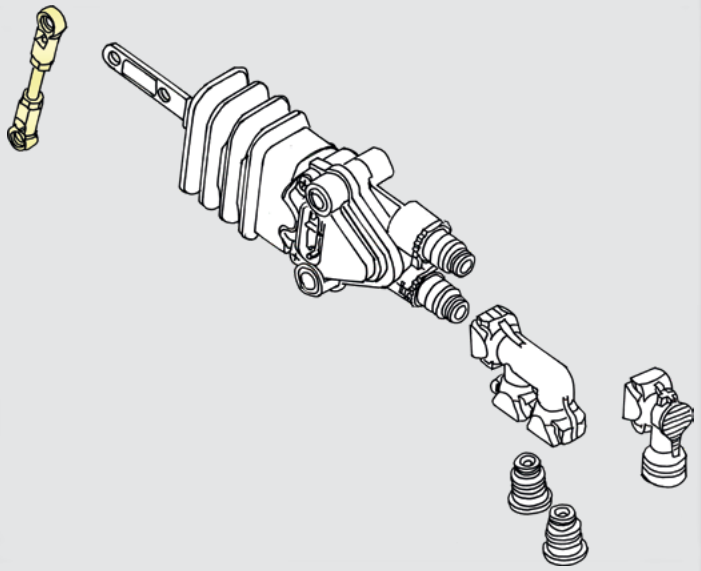

G	09/2013 - 2018	CG 14/16/19
P	09/2013 - 2018	CP 14/16
R	09/2013 - 2018	CR 16/19

2090505→
5332801→
9179157→
3846667→

318568

Intermediate rod 168 mm CG/CR 10/2016-2018

ScR **2446927**

Rod length:
168 mm (without heads)

Rod material:
Steel



Threads:
M05 x 0,8 mm
20 mm LHT
20 mm RHT

Heads:
Short

Heads material:
Plastic



kg 0,03

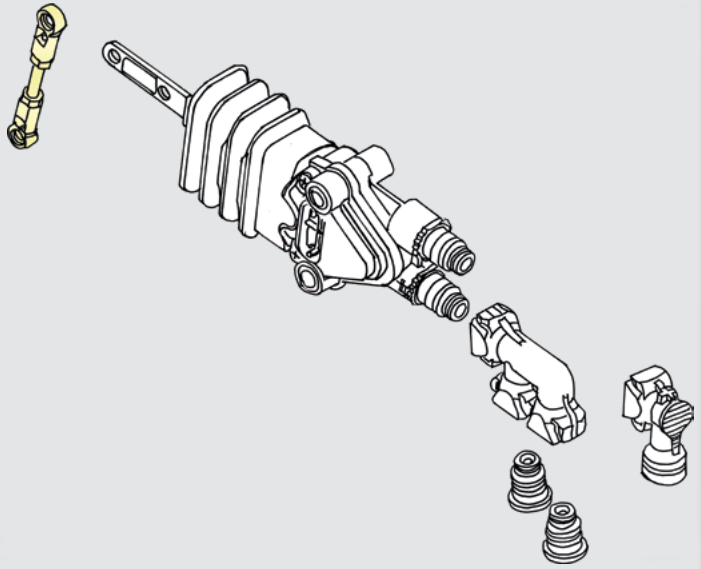

GR	10/2016 → 2018	CG / CR	
2130382→	5444876→	9215715→	

318708

Link → Cabin suspension, REAR

ScR

1781929
1343131



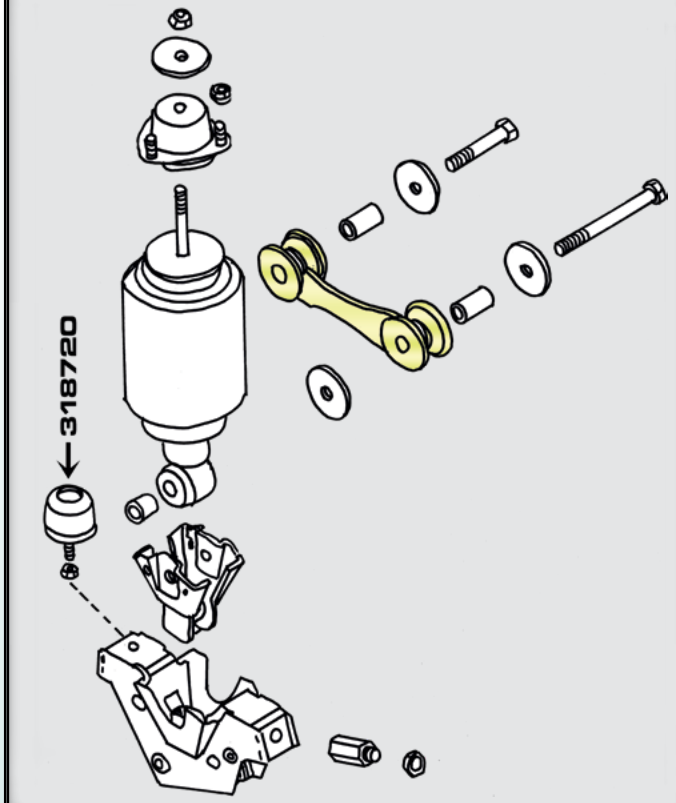

Kit → HD 318703



Material:
Painted steel

kg 0,55

GPR 04/2004 - 2018
94 - 164 06/1995 - 12/2004

318703

Link kit → Cabin suspension, REAR

HD own design

ScR

ScR **1343135**

40 mm Ø 14/22 mm

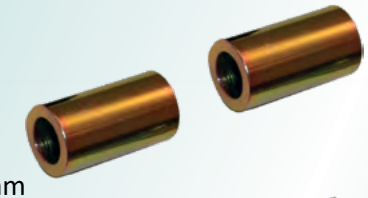

ScR **814912**

M14 x 2,0 x 80 mm



ScR **814919**

M14 x 2,0 x 150 mm

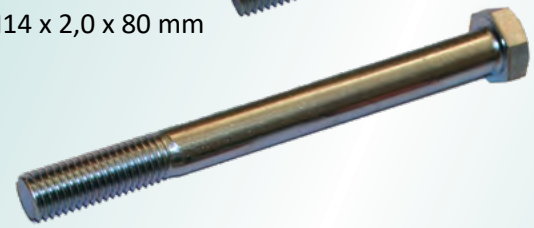

ScR **1324793**

Ø 14/60 mm 5 mm



ScR **1894408** **1481245** **1343134**

OE material: Yellow polyurethane

S = 20,5 mm Material: EPDM-rubber A58 +/-3 shore -50°C - +150°C



kg 0,95

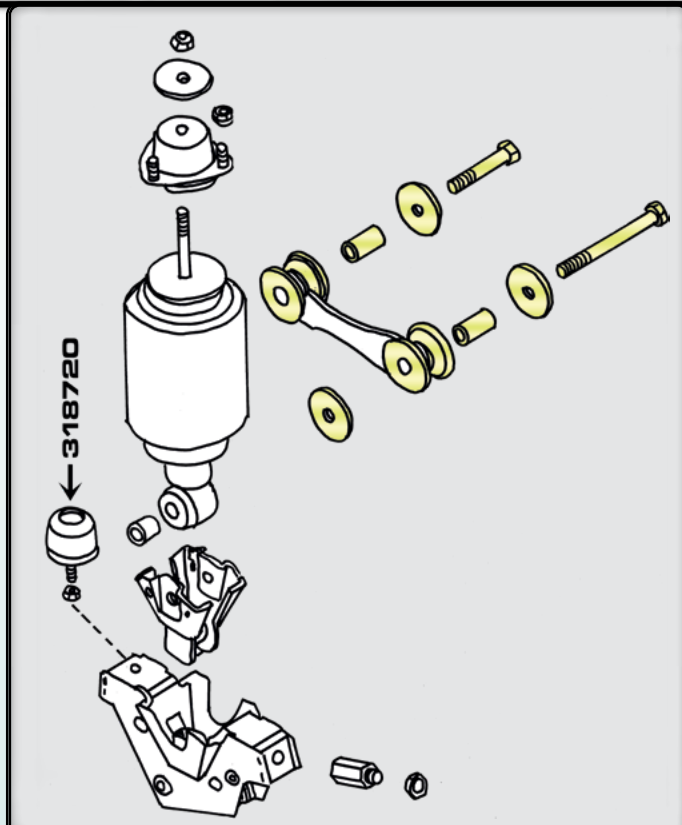

GPR	04/2004 - 2018
94 - 164	06/1995 - 12/2004

318786

Wire

ScR 1926077

1888669 + 1888673
1745181 + 1777336

2 wires are replaced by 1 **HD** - wire.

410 mm
280 mm
2100 mm

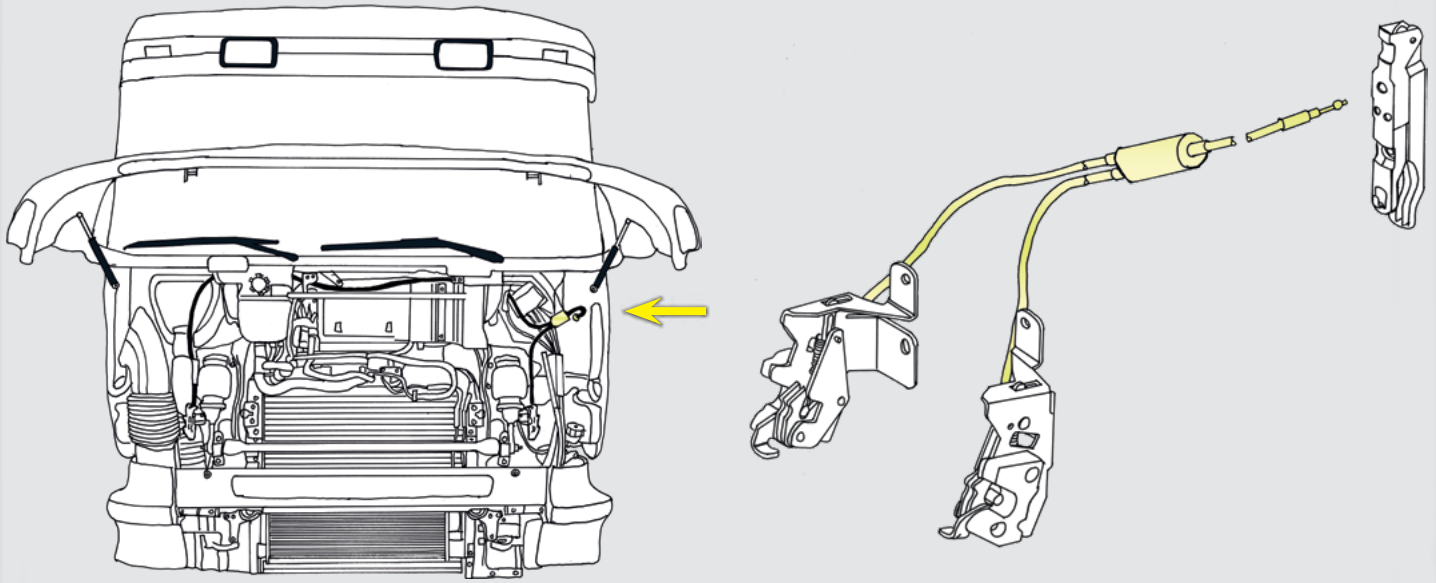

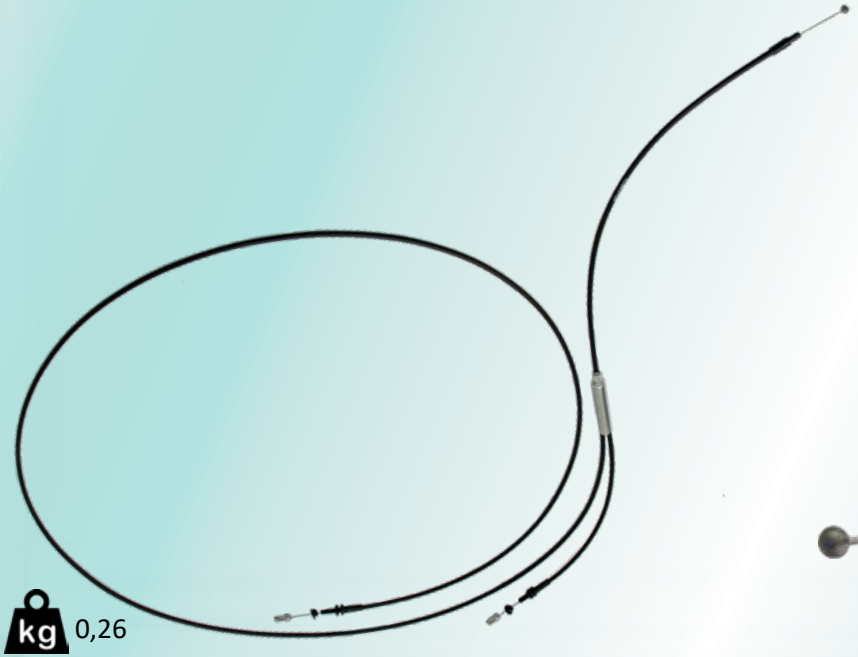

Opening handle:
HD 318788



R	CR	04/2004 - 2018	LHD
2000402→	5103487→	9092987→	351125→
G	CG	04/2008 - 2018	LHD
2030058→	5216107→	3619596→	



kg 0,26

318787

Wire

ScR 1926079

1888670 + 1888672
1777332 + 1777335

2 wires are replaced by 1 **HD** - wire.

290 mm → 300 mm / 1820 mm

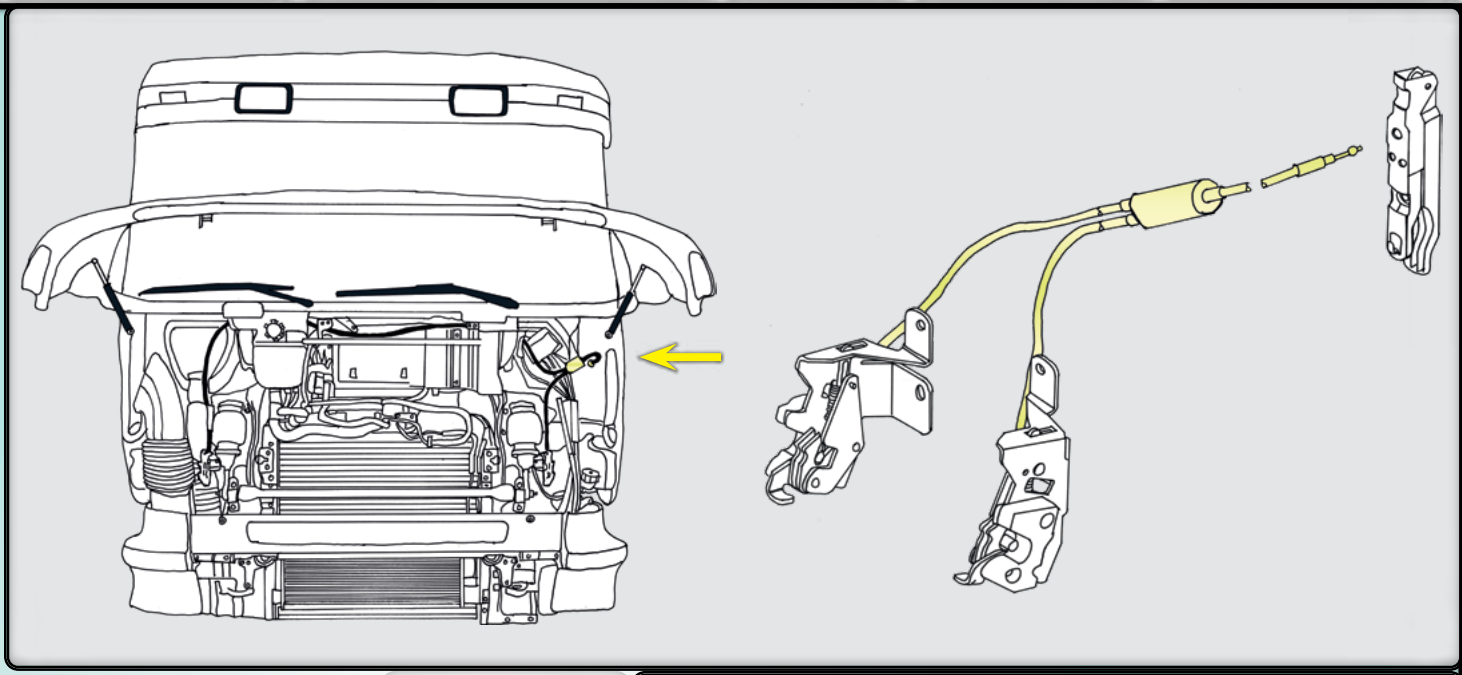

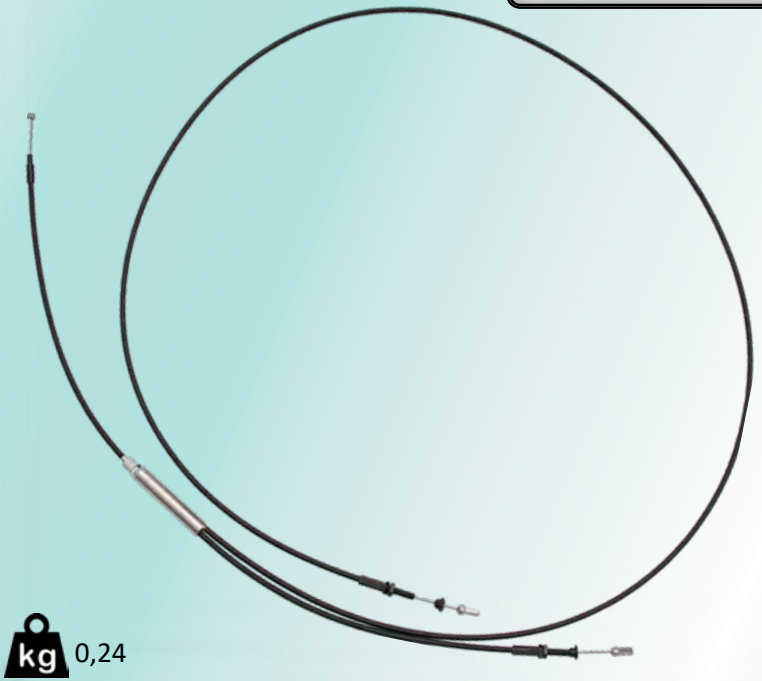

kg 0,24

Opening handle:
HD 318788



P | CP | 09/2004 - 2018 | LHD

2003440→ 5112186→ 9098165→ 3618316→



318788

Opening handle

ScR

1767631
1431334

Material: Plastic



kg 0,11

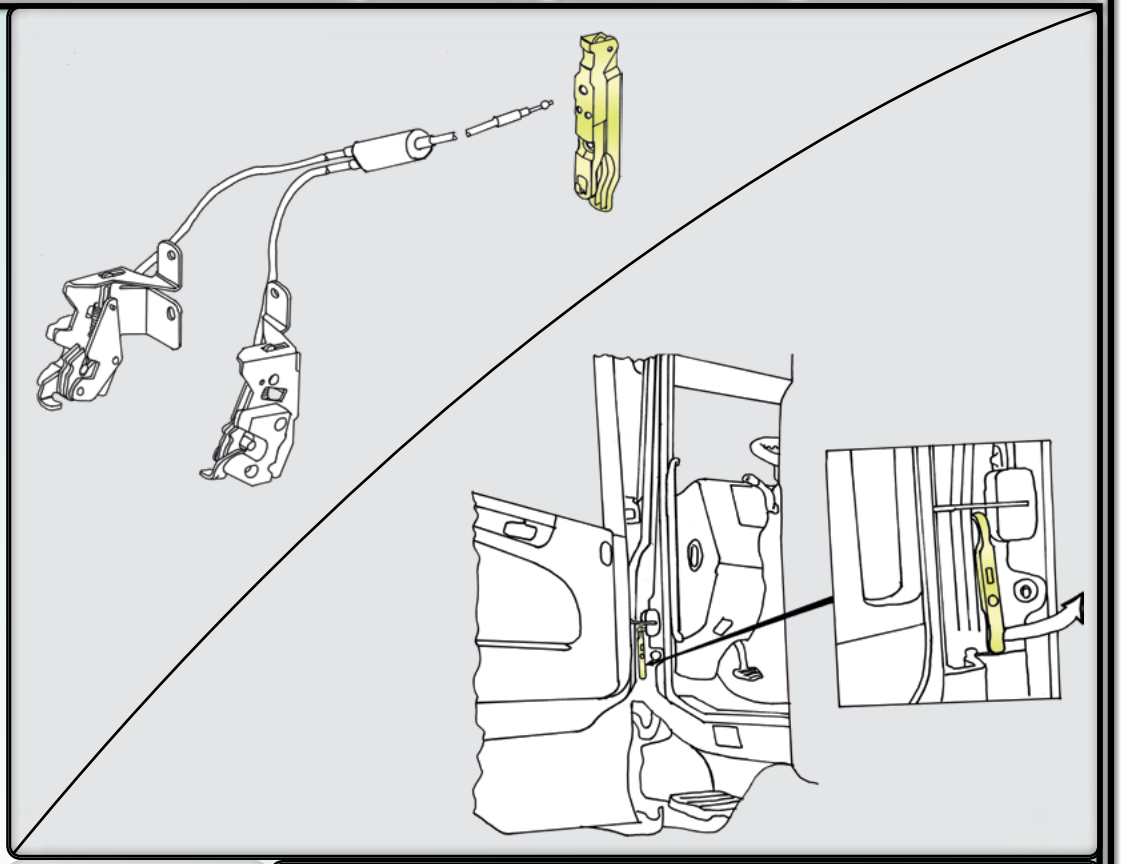

CG/CR wire:
HD 318786



CP wire:
HD 318787



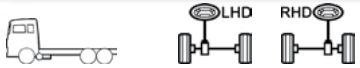

GPR 04/2004 - 2018

94, 114, 124, 144, 164 CR/CT 02/2000 - 12/2004

1257631→ 4427279→ 9049831→ 3515439→

94, 114, 124, 144, 164 CP 09/1997→

1233805→ 4382184→ 9027006→ 3500089→

318871

Cabin tilt stop

ScR 1496211



kg 2,83

R CR 04/2004 - 2018

1020 mm

318872

Cabin tilt stop

ScR

1865815
1777729



kg 2,66

G CG 09/2007 - 2018

1020 mm

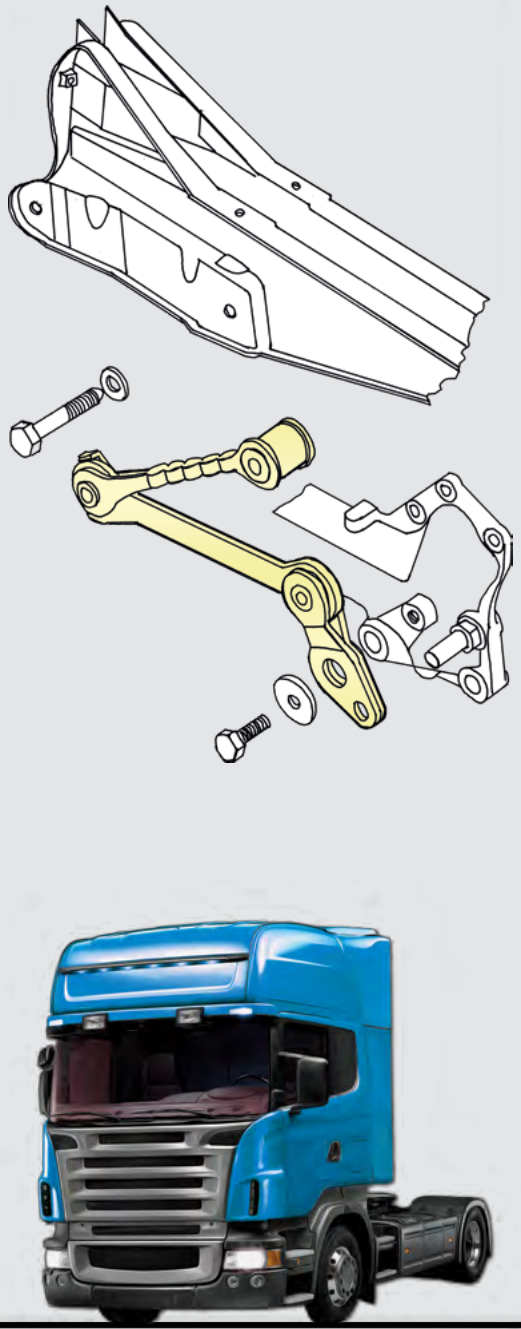

318790

Bonnet lock

ScR

1800469
1720615

Material:
- Steel
- Plastic

Opening handle:
HD 318788



Wire:
HD 318786



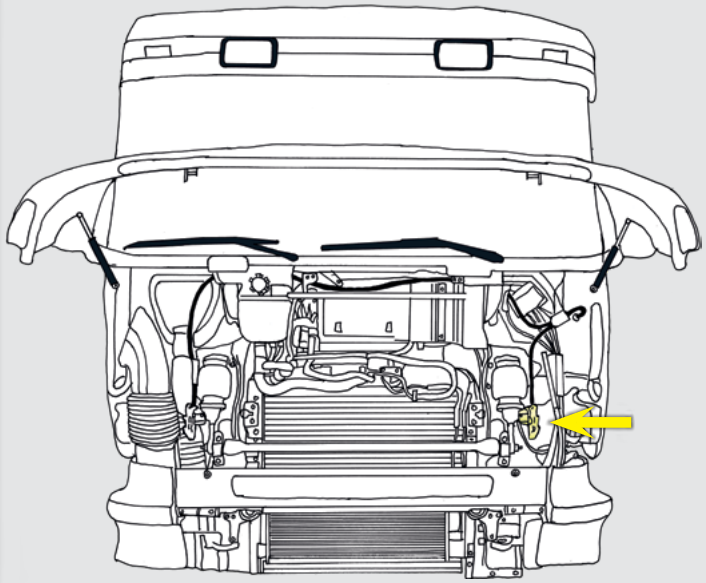

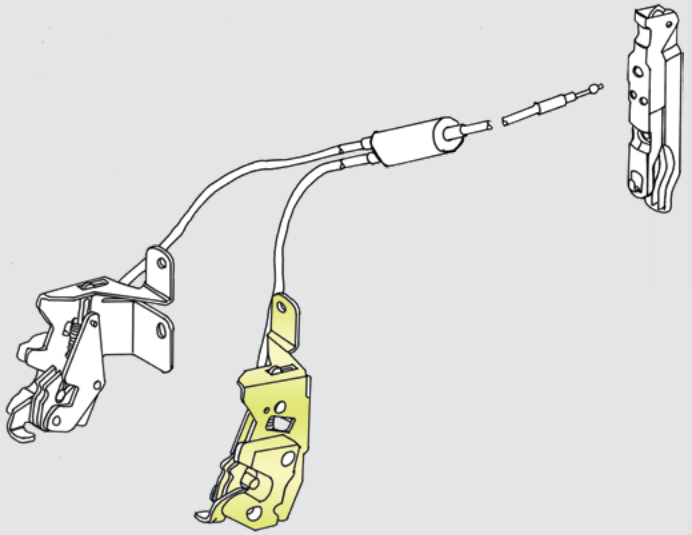





kg 0,59

R	CR	1020 mm	→09/2009
→2049067	→5229856	→9143692	→3652126
G	CG	1020 mm	
2030058 - 2048042			04/2008 - 06/2009
5216107 - 5227895			11/2008 - 06/2009
3622683 - 3652126			04/2008 - 10/2009

LHD RHD

Before facelift

318791

Bonnet lock

ScR

1800470
1720616

Material:
- Steel
- Plastic

Opening handle:
HD 318788



Wire:
HD 318786



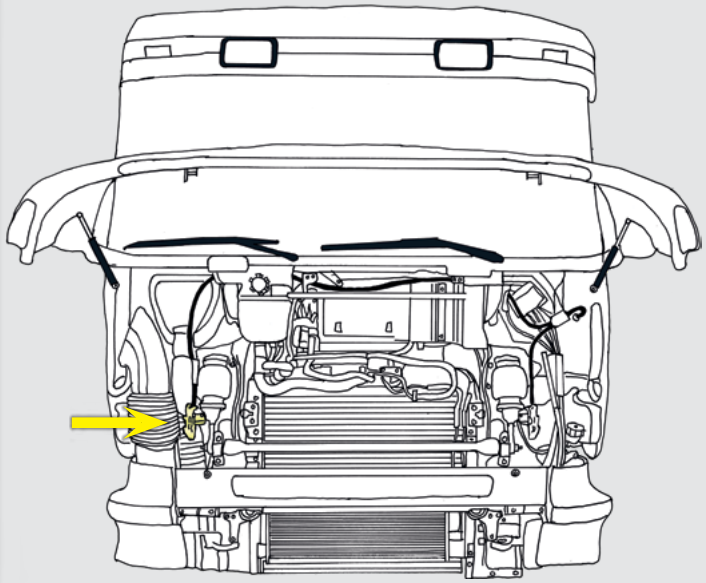

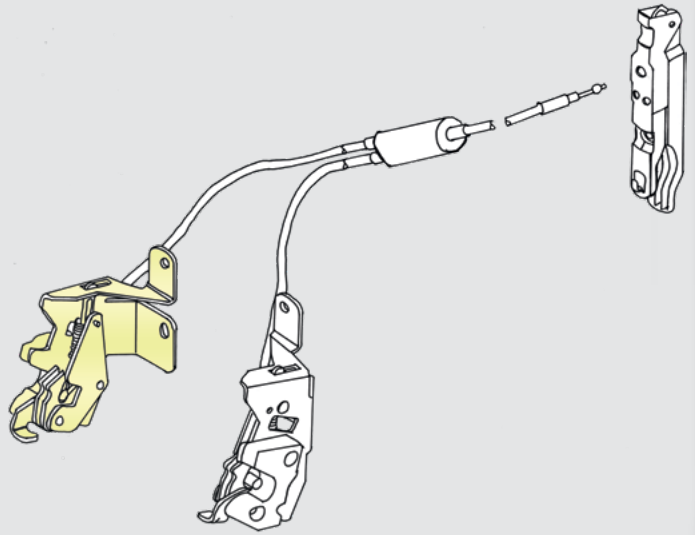





kg 0,56

R	CR	1020 mm	→09/2009

→2049067 →5229856 →9143692 →3652126

G	CG	1020 mm

2030058 - 2048042	04/2008 - 06/2009
5216107 - 5227895	11/2008 - 06/2009
3622683 - 3652126	04/2008 - 10/2009

LHD

Before facelift

318792

Bonnet lock

ScR 1902355

Material:
- Steel
- Plastic

Opening handle:
HD 318788



Wire:
HD 318786



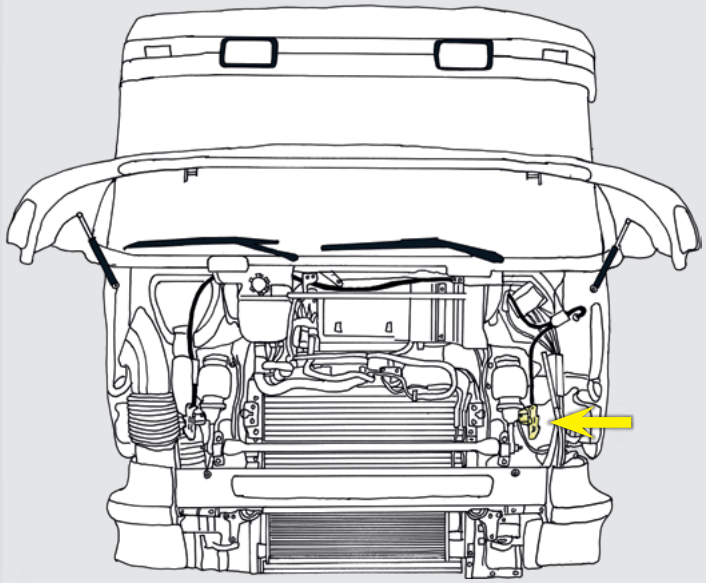

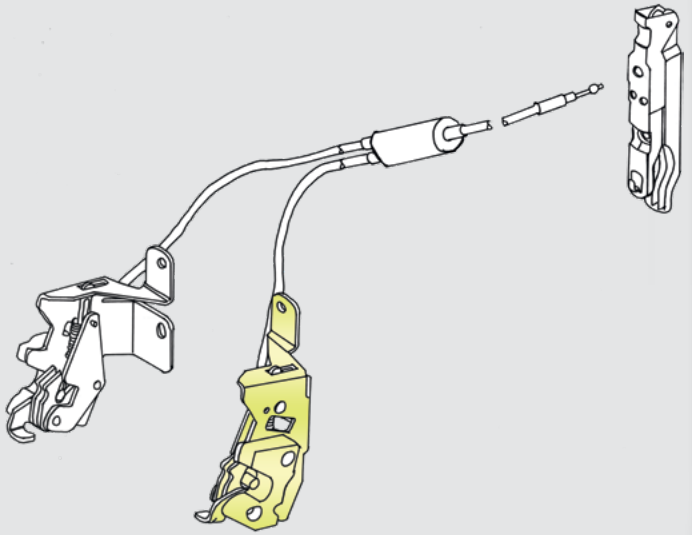





kg 0,62

R	CR	1020 mm	09/2009 - 2018
2049068→	5229857→	9143693→	3652127→
G	CG	1020 mm	07/2009 - 2018
2048043→	5227896→	9142769→	3652127→

LHD RHD

After facelift

318793

Bonnet lock

ScR 1902356

Material:
- Steel
- Plastic

Opening handle:
HD 318788



Wire:
HD 318786



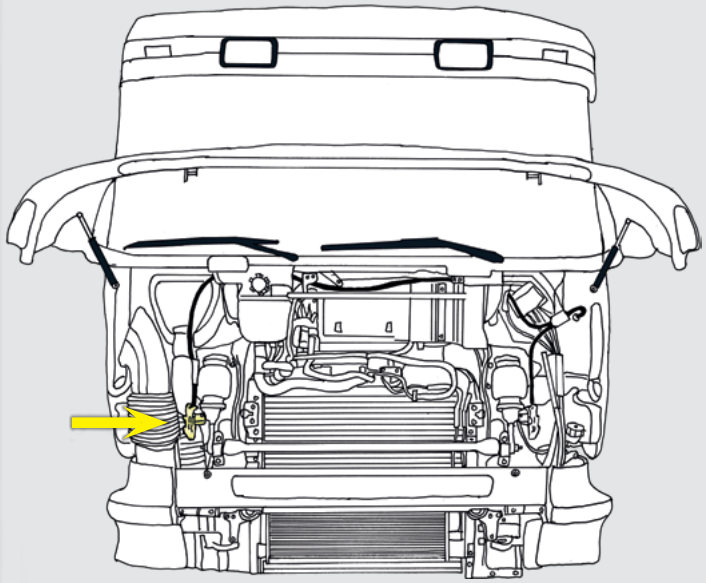

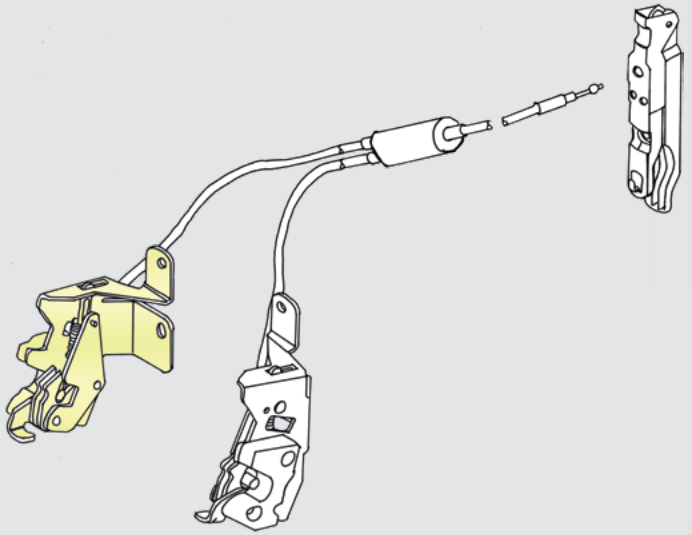



kg 0,59

R	CR	1020 mm	09/2009 - 2018
2049068→	5229857→	9143693→	3652127→
G	CG	1020 mm	07/2009 - 2018
2048043→	5227896→	9142769→	3652127→

LHD

After facelift

318794

Bonnet lock

ScR 1800467

Material:
- Steel
- Plastic

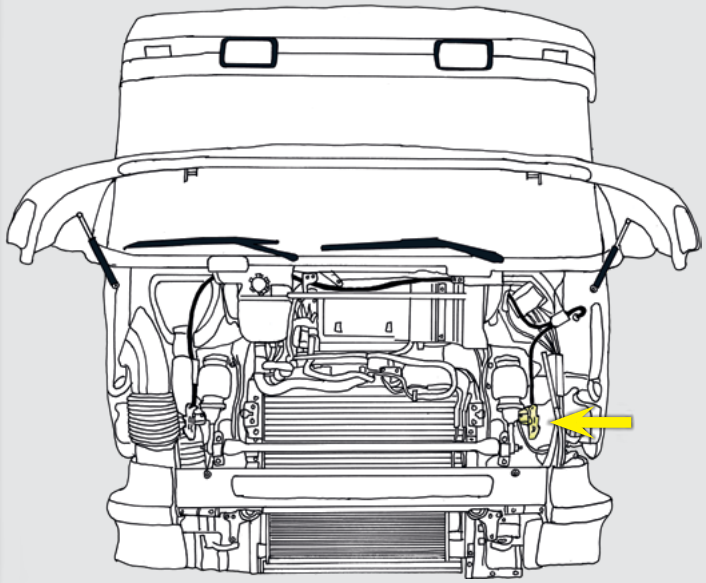

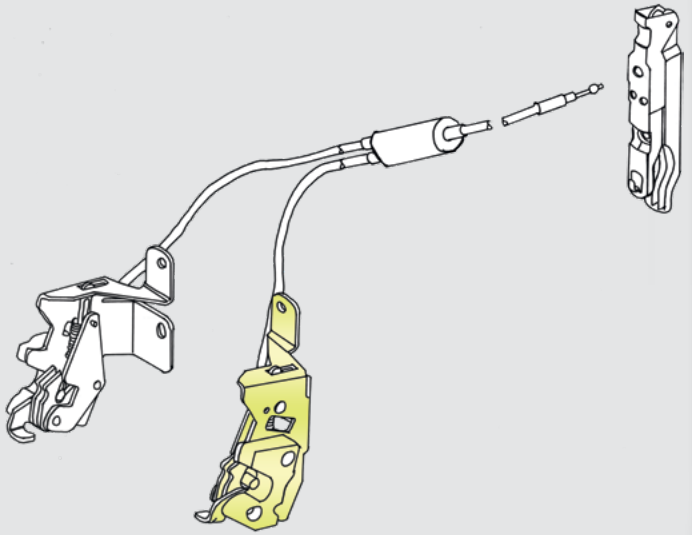





kg 0,53

Opening handle:
HD 318788



Wire:
HD 318787



P	CP	1020 mm	03/2007 - 2018

2025385→ 5171873→ 9119292→ 3604452→

LHD RHD

318795

Bonnet lock

ScR 1800468

Material:
- Steel
- Plastic

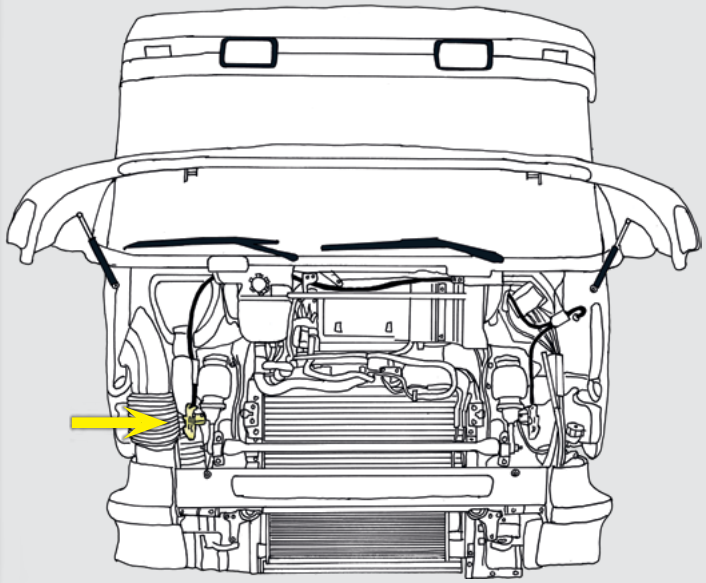

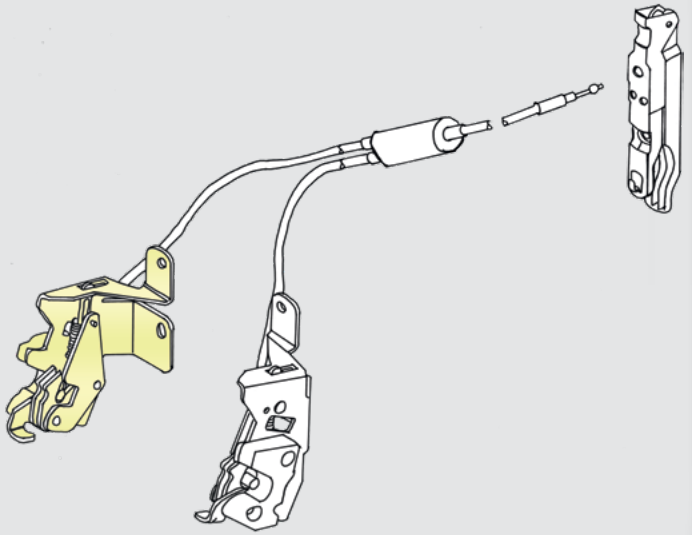





kg 0,51

Opening handle:
HD 318788



Wire:
HD 318787








P | CP | 1020 mm | 03/2007 - 2018



2025385→ 5171873→ 9119292→ 3604452→




318798

Bonnet lock

ScR 1925340

Material:
- Steel
- Plastic

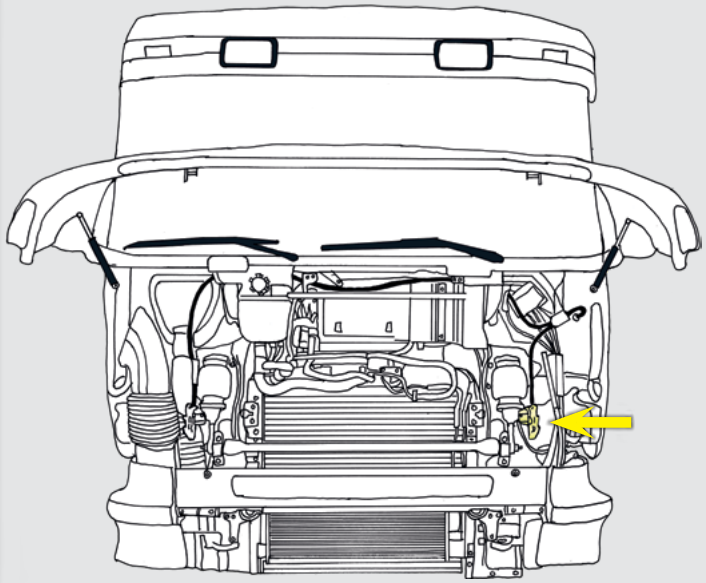

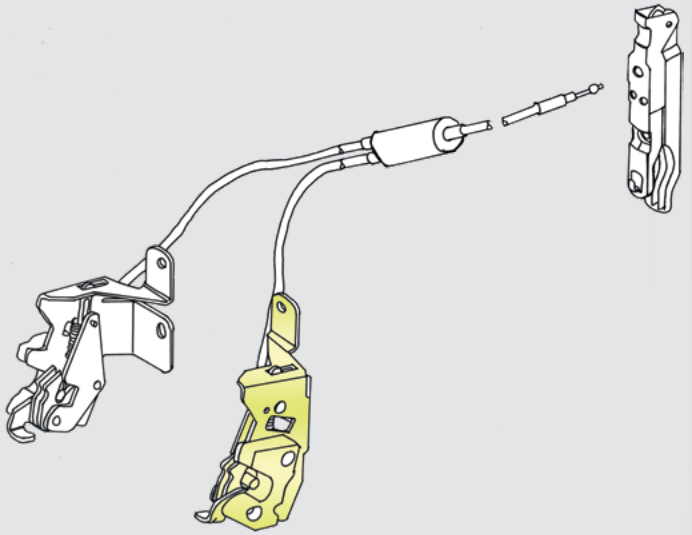





kg 0,57

Opening handle:
HD 318788



Wire:
HD 318786



R	CR	1140 mm	06/2009 - 2018
G	CG	1140 mm	06/2009 - 2018

2047960→ 5227704→ 9142673→ 3649325→

LHD RHD

318799

Bonnet lock

ScR 1925341

Material:
- Steel
- Plastic

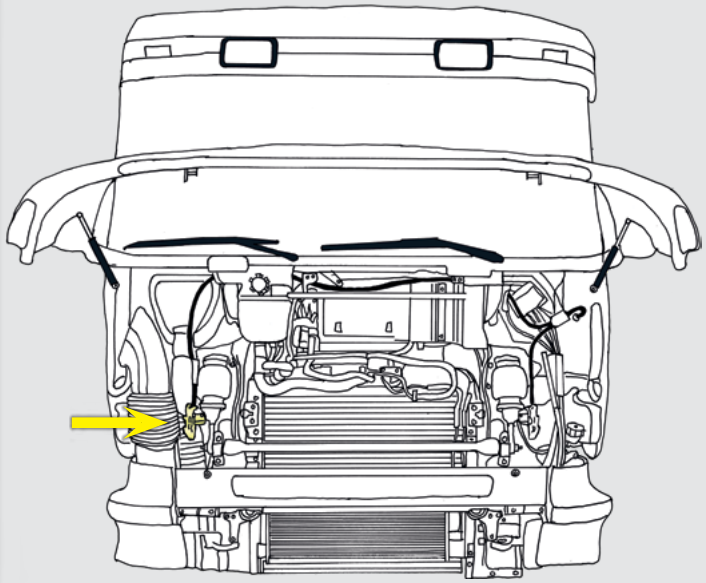

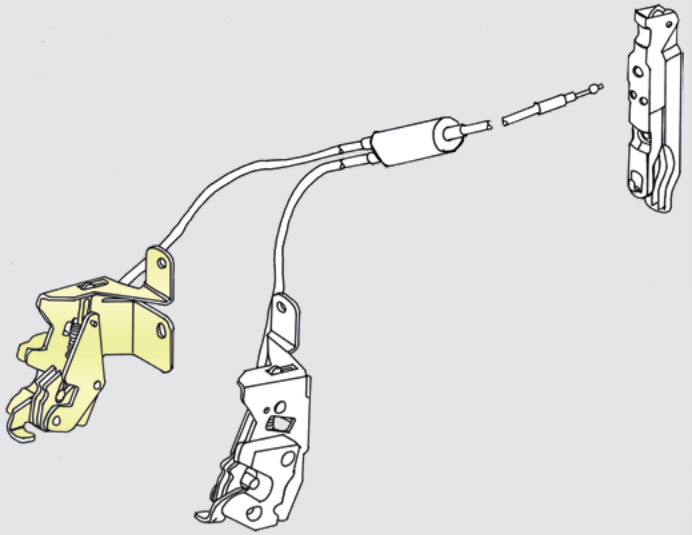





kg 0,55

Opening handle:
HD 318788



Wire:
HD 318786



R	CR	1140 mm	06/2009 - 2018
G	CG	1140 mm	06/2009 - 2018

2047960→ 5227704→ 9142673→ 3649325→

LHD

318940

ScR

Heat exchanger

453 x 157 x 32 mm

Material: Aluminum

1846702
1437263
1421760



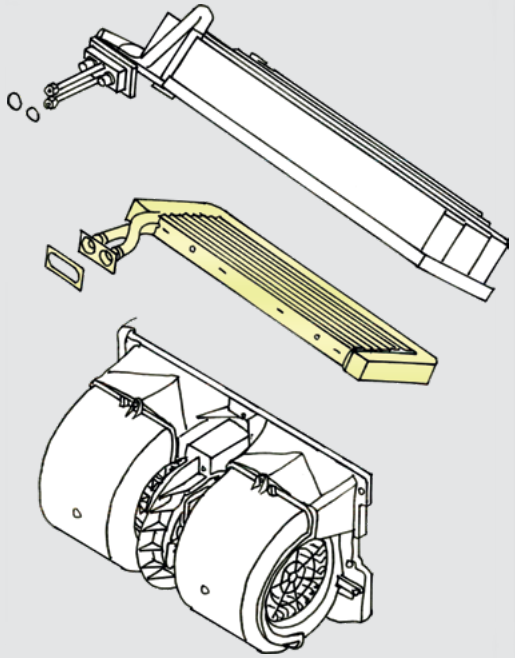

GPR

→	
→2046174	→02/2009
→5224880	
→9141334	
→3644064	

94, 114, 124, 144, 164

All 06/1995 - 12/2004

HVAC2. 2036226→ 02/2008→

Heating, ventilation and air conditioning, generation 2.
Обогрев, вентиляция и кондиционирование, 2 поколение.

1,3

318941

Heat exchanger

415 x 184 x 27 mm

ScR

2251191
2148428
2125525
1772717





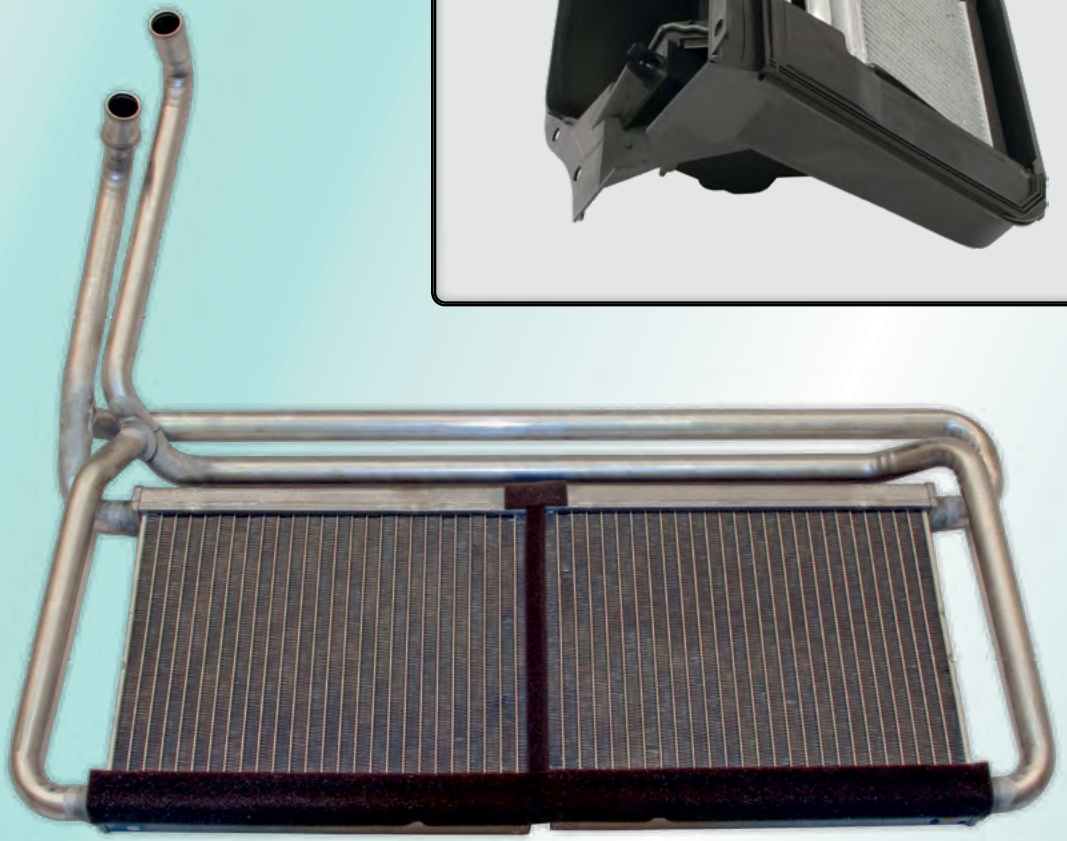

2,26

GPR 02/2009 - 2018

2046175→
5224881→
9141335→
3644065→

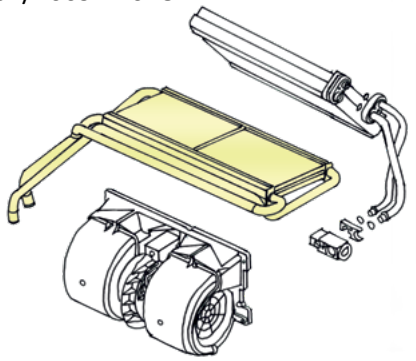

HVAC2. 2036226→ 02/2008→

Heating, ventilation and air conditioning, generation 2.
Обогрев, вентиляция и кондиционирование, 2 поколение.

318943

Heat exchanger

301 x 160 x 20 mm

ScR **2301598**

Material: Aluminum

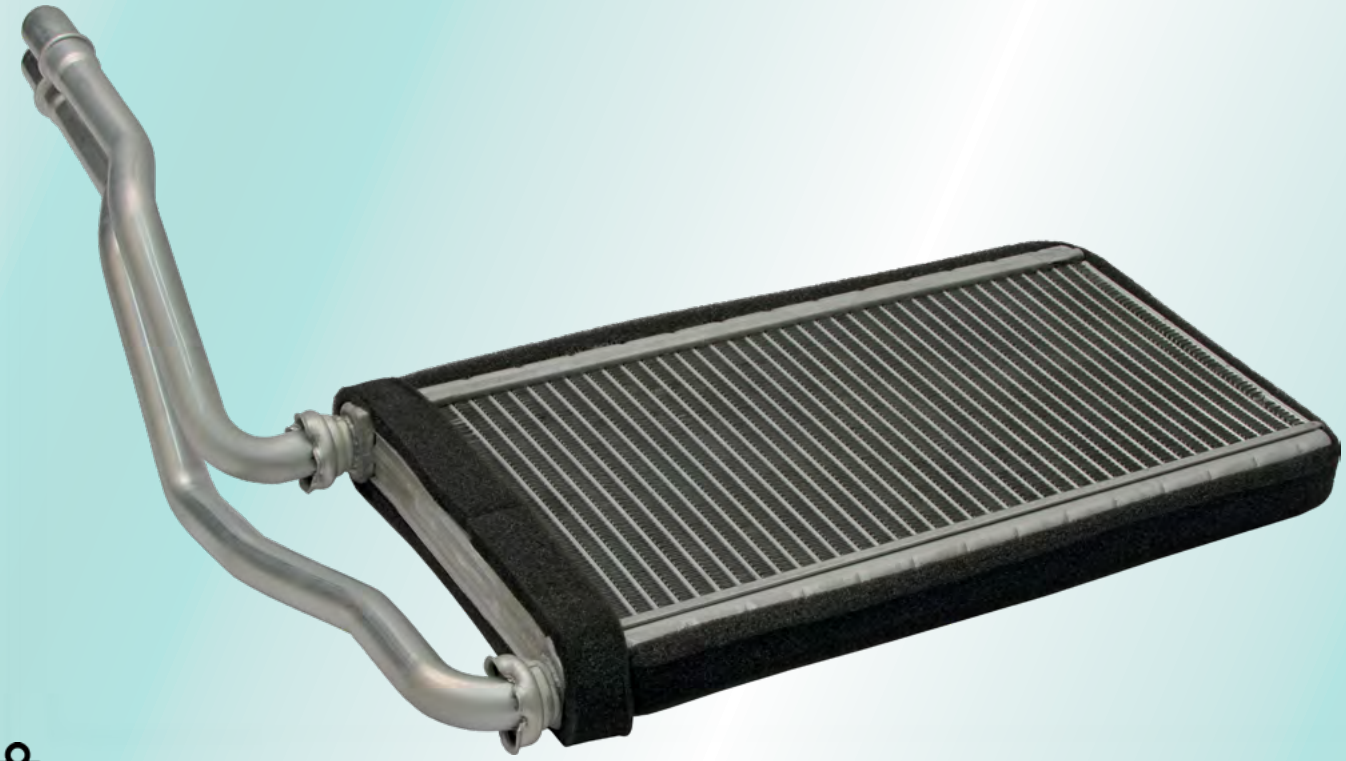

kg 0,77

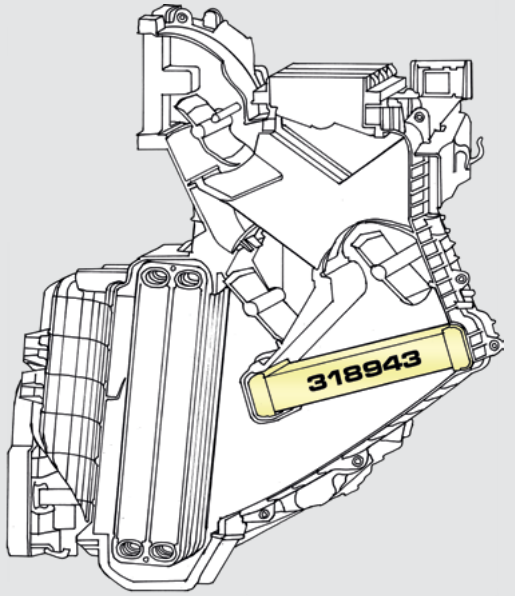

LPGRS 08/2016→

318919

Seal → Cab air filter LPGRS

ScR **2303900**

Material:
Self adhensive foam rubber

Length: 1250 mm



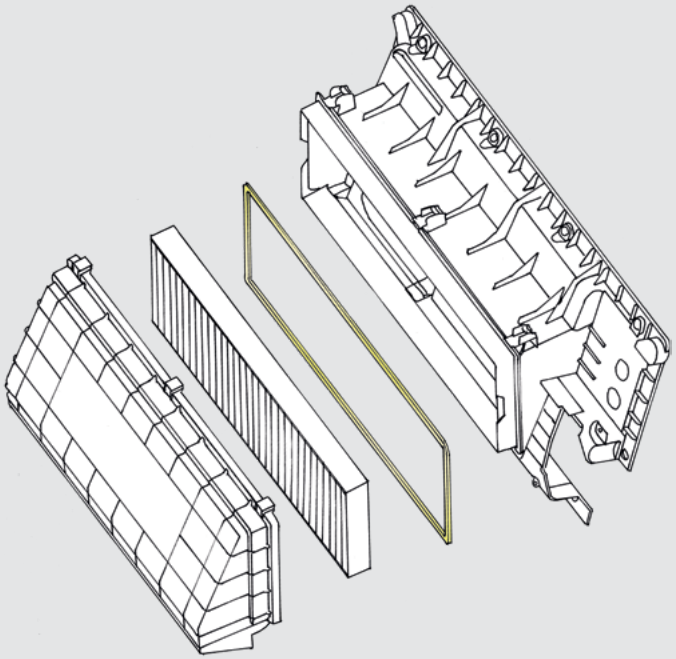

LPGRS 09/2016→

HVAC = Heating, Ventilation and Air Conditioning

kg ?

Seal → Cab air filters:

318915 Scr 2095029 Polyester
318916 Scr 2095030 Polyester with activated carbon particles
318917 Scr 2655428 2095028 Extra Heavy Duty (not available)

318915

Cab air filter

ScR **2095029**

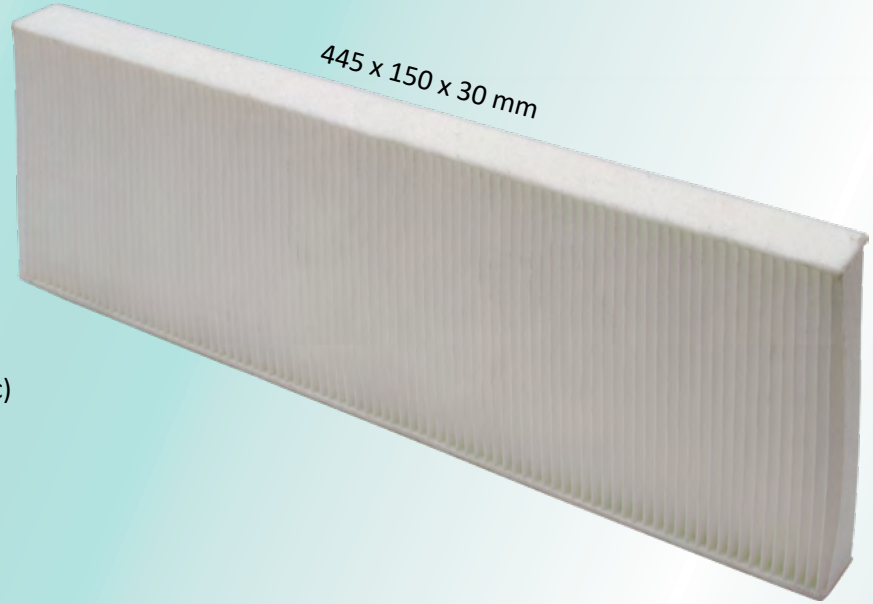

Material:
Polyester (non-woven fabric)

kg 0,23

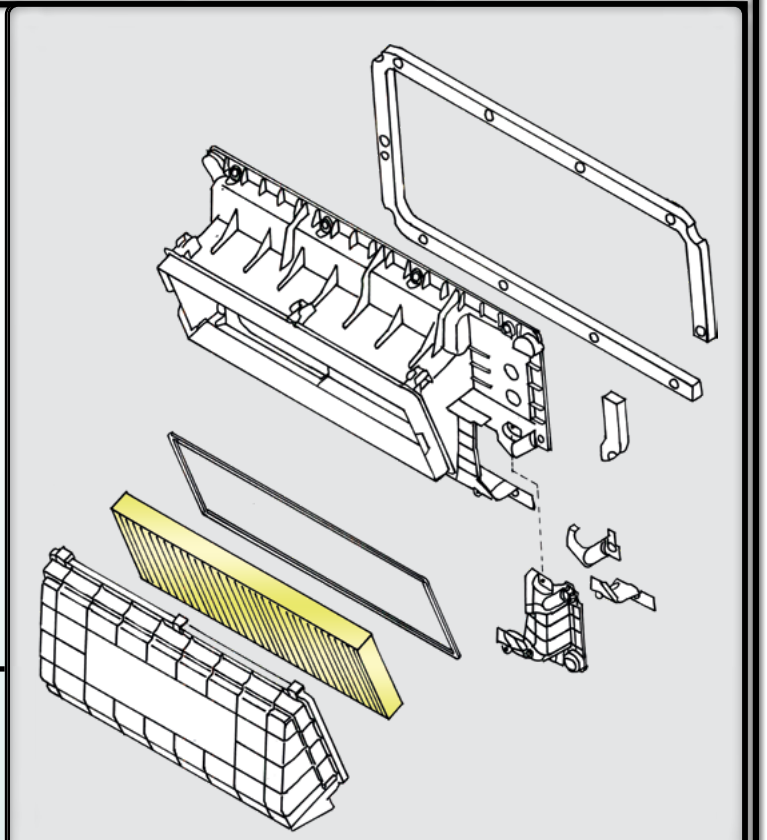

318916

Cab air filter

ScR **2095030**

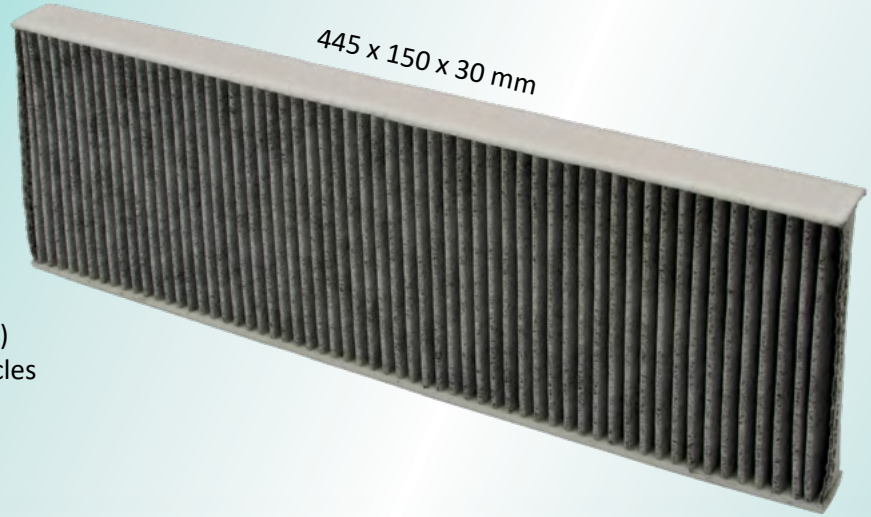

Material:
Polyester (non-woven fabric)
with **activated carbon** particles

kg 0,48

LPGRS 09/2016 →

318914

Cab air filter
Outside

ScR

1913500
1770813

Material:
Polyester (non-woven fabric)

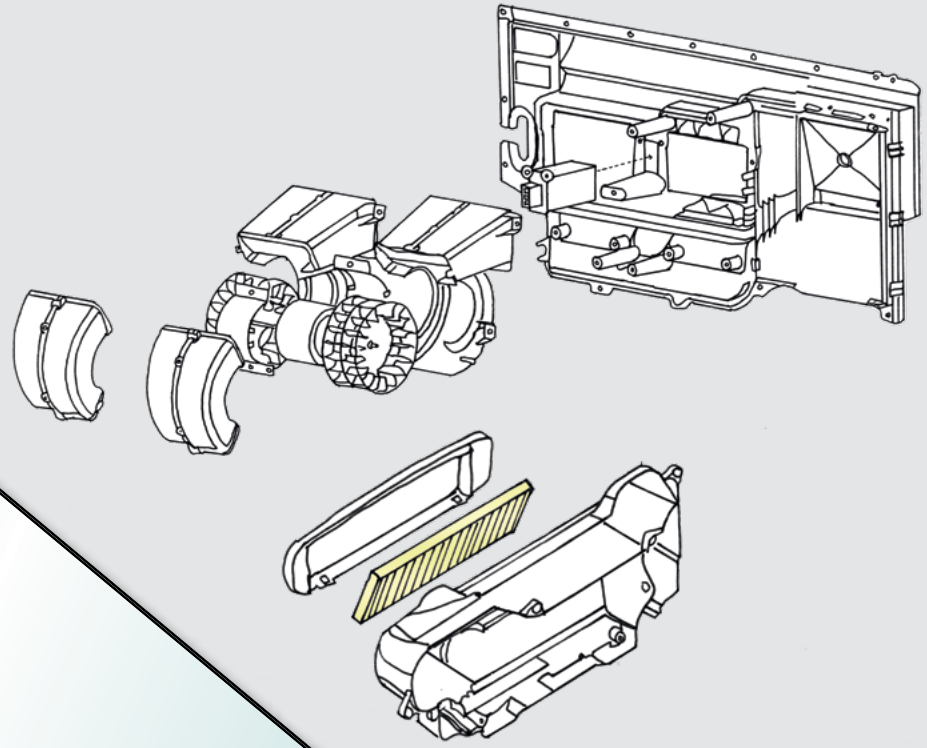

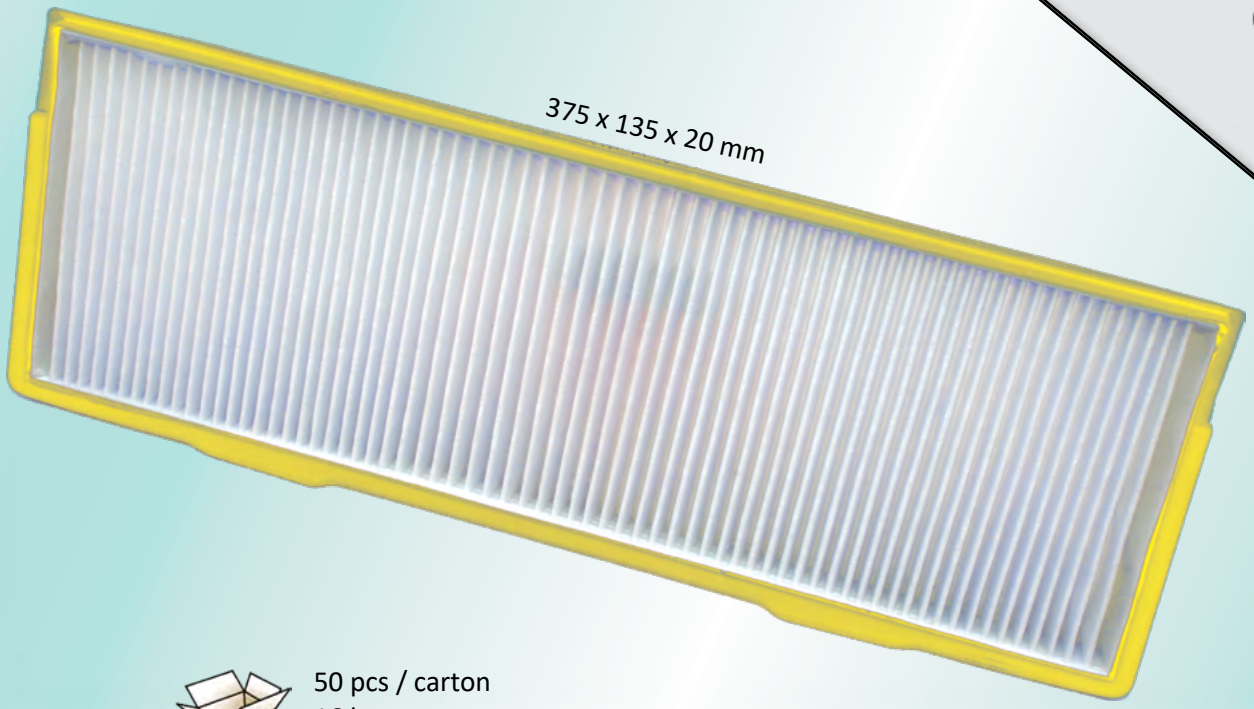

50 pcs / carton
16 kg
0,055 m3

kg 0,17

GPR

2036226→
5200028→
9130724→
3621169→

02/2008 - 2018

318922

Brushless fan motor assy 24v



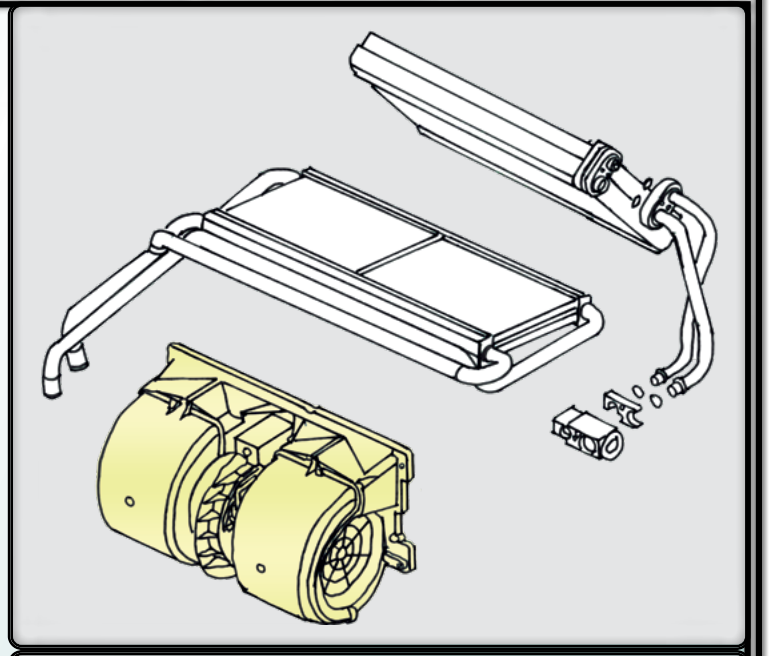

ScR

1750450	assy
1739686	assy
2195206	motor
1854876	motor



GPR 04/2004 - 2018



kg 2,93

318620

Bump stop → Cabin anti-roll bar, front

ScR **2393800**

Material: EPDM rubber

Dimensions: 70 x 39 x 25,5 mm

Threads: M8 x 1,25 x 13,5 mm

Hole: Ø 20 mm



kg 0,1

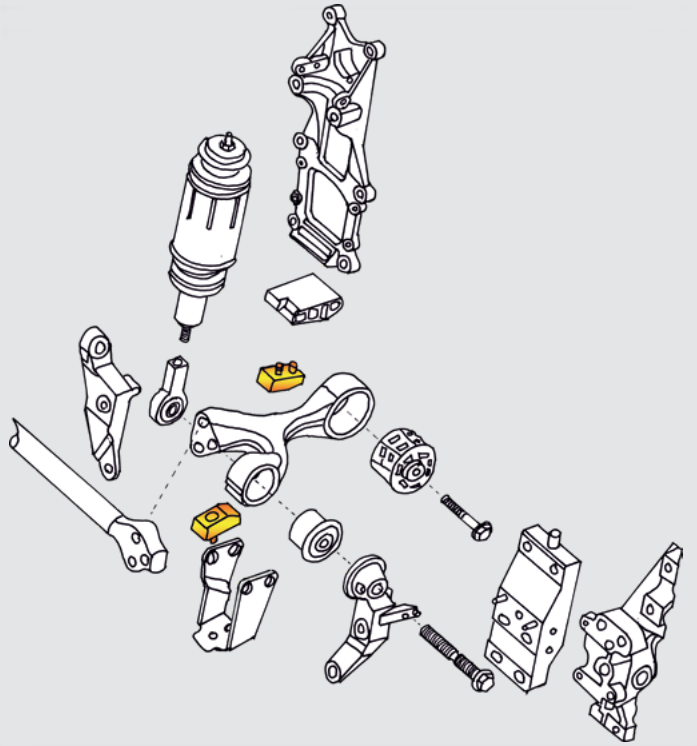

LPGRS | 08/2016→ | 4 /

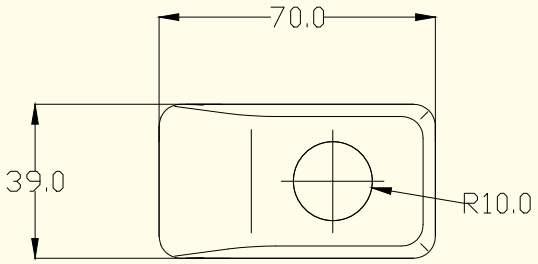

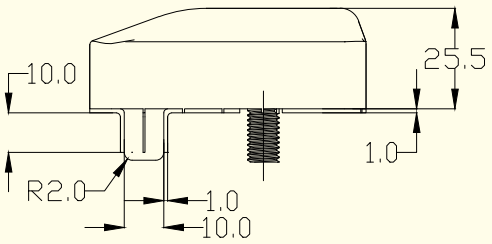

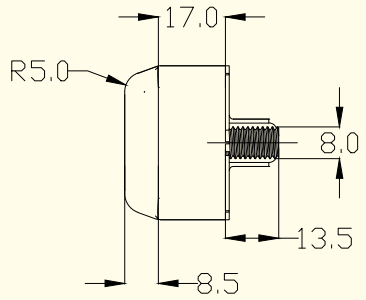

318610

Bushing (smaller) → Torsion bar, front

ScR **2308635**

Ø 18,6 / 41,2 / 60,3 / 79,4 mm

kg ?



318614

Special flange shaft → Torsion bar, front

ScR **2583449 2411901**

Threads: M18 x 2,5 mm

kg ?



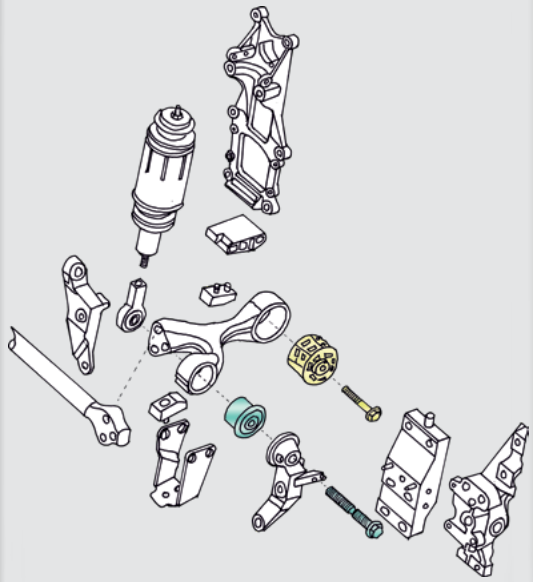

318612

Bushing (bigger) → Torsion bar, front

ScR **2545537 2330320**

Ø 16,5 / 80,4 - 83,6 / 90,1 - 93,6 mm
(Oval bushing)

kg ?



LPGRS 08/2016→

318613

Special flange shaft → Torsion bar, front

ScR **2454376**

Threads: M16 x 2,0 mm

kg ?



318618

Rotating head

ScR **2285718**

Materials:
- Aluminium
- Steel
- Rubber

Threads: M12 x 1,75 mm
Length: 89,5 mm

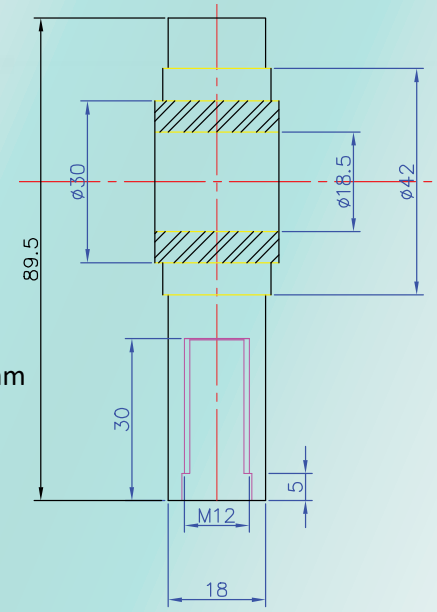



kg 0,21

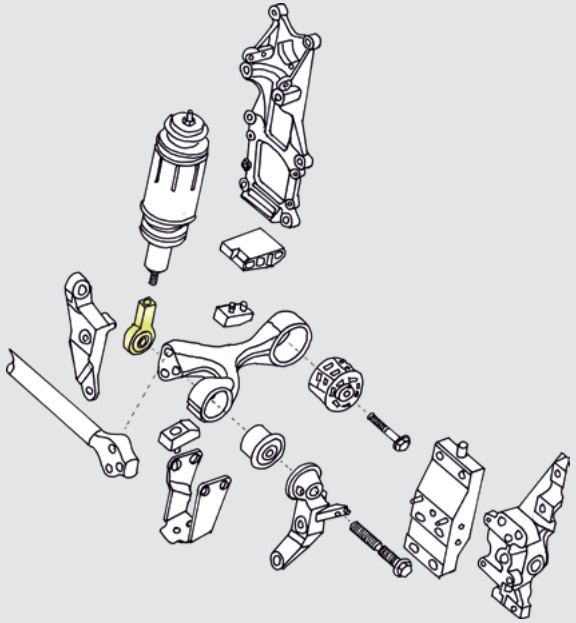

318619

Rotating head

ScR **2285717**

Materials:
- Aluminium
- Steel
- Rubber

Threads: M12 x 1,75 mm
Length: 114,5 mm

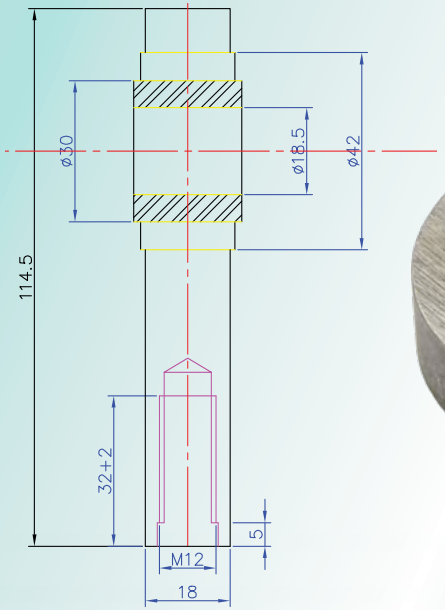

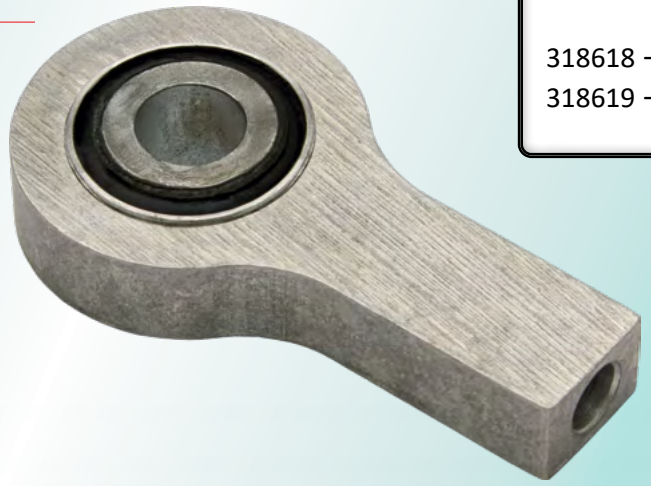

kg 0,24

LPGRS 08/2016→

318618 → LPRS
318619 → G

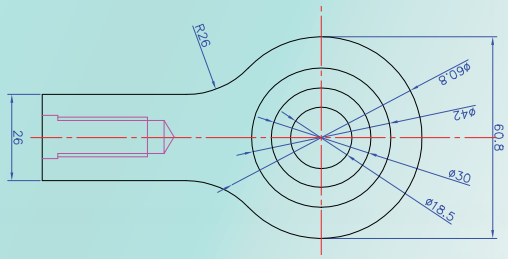

318630

Link kit → Cabin

Kit without crossbar: HD 318632

ScR

2773897
2402499

2773896
2402500

This kis is our own creation and replaces all above mentioned Scania-references. It also includes extra parts.



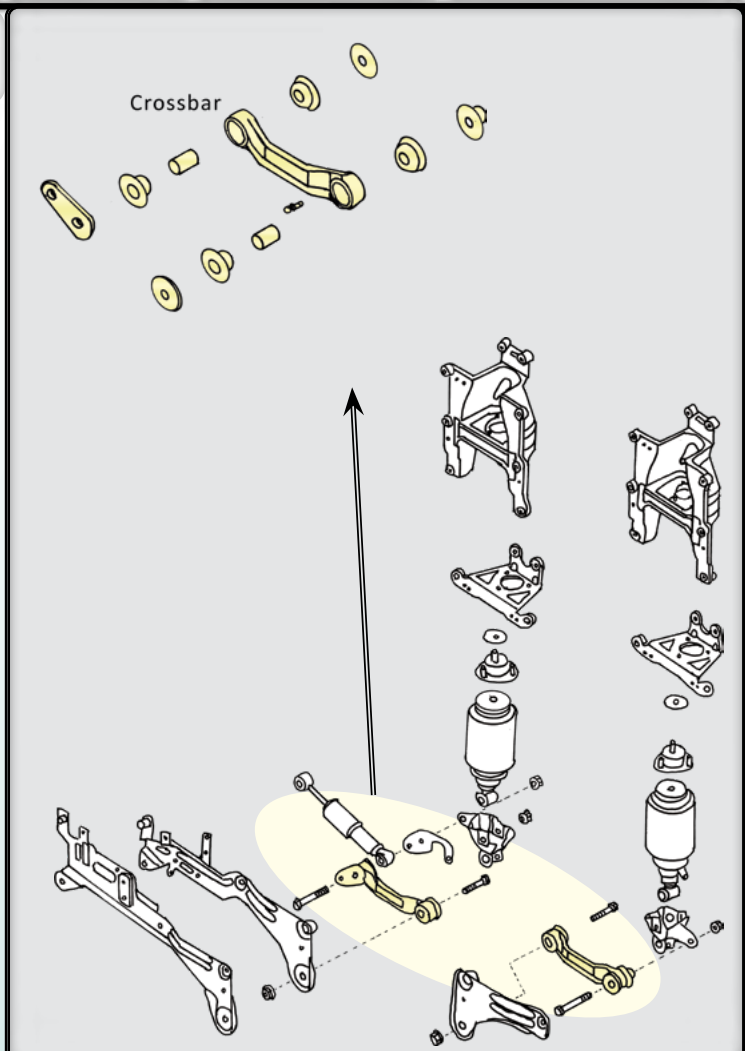

kg 2

LPGRS

08/2016→

CL 20
CP 14/17/20/28/31
CG 14/17/20
CR 17/20
CS

2 /

318632

Repair link kit → Cabin

Kit with crossbar: HD 318630

ScR

2773897
2402499

2773896
2402500

This kis is our own creation and replaces all above mentioned Scania-references, except the crossbar.
It also includes extra parts.



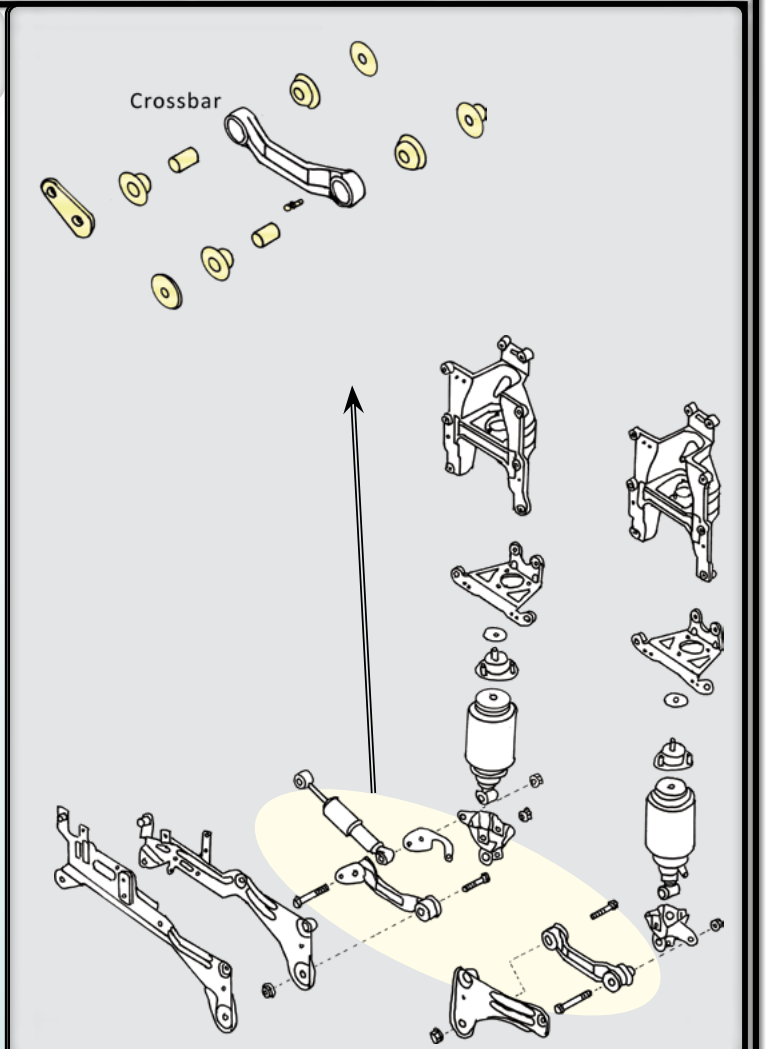

kg 1,27

LPGRS

08/2016→

2 /

CL 20
CP 14/17/20/28/31
CG 14/17/20
CR 17/20
CS

318714

Spacing sleeve → Cabin suspension, Rear

ScR 1519137

Ø 14,5 x 30 x 23 mm

Material: Steel

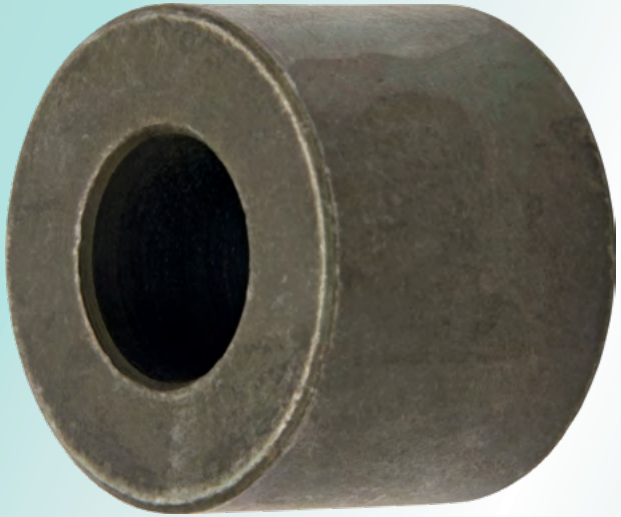

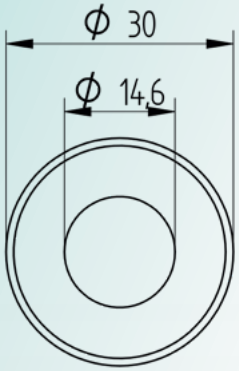

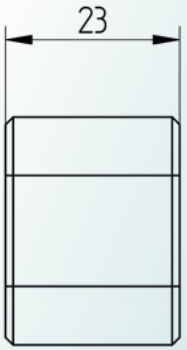

kg 0,1



LPGRS 08/2016 →

- Fuel and exhaust systems
- Brakes

GPR 2003 - 2018

- Engine
- Fuel and exhaust systems
- Gearbox
- Brakes
- Frame
- Cabin

94 - 164 1994 - 2008

- Cabin

318599

Ball pin → Several places in the cab

ScR 1366911

Ball: Ø 10 mm

Threads: Ø M08 x 1,25 mm

Material: Steel

kg ?

→ Several places in the cab



LPGRS	08/2016 →
GPR	2004 - 2018
94 - 164	1994 - 2008

319280

Bracket → Rear plate

ScR **1376224**

Material:
Painted steel

Material thickness:
3,3 mm

Thread:
M08 x 1,25 mm





kg 0,8

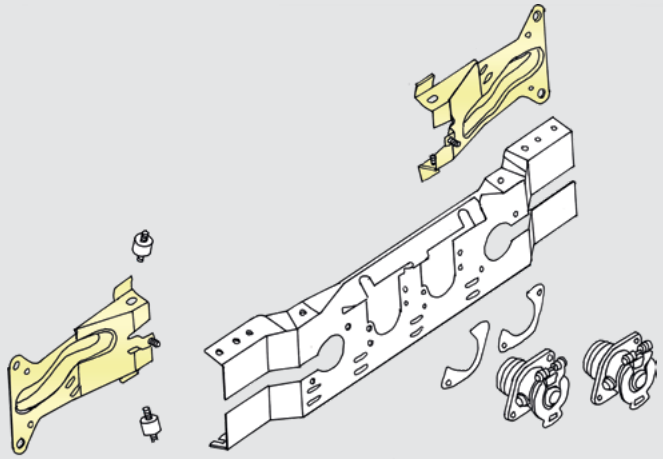

GPR	04/2004 - 2018
CP16, CG16, CR16	
D9, D12, D13	

94 - 164	06/1995 - 12/2004

There are also other bracket possibilities for ↑ models.

319281

Bracket → Rear plate

ScR **1522440**

Material:
Painted steel

Material thickness:
3,3 mm

Thread:
M08 x 1,25 mm



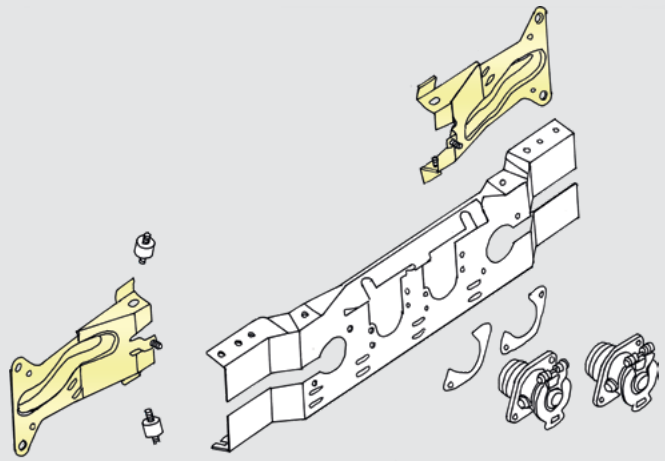

GPR 04/2004 - 2018

CP19, CG19, CR19

CR20, CS20 DC 16

164 06/1995 - 12/2004

kg 0,8

There are also other bracket possibilities for ↑ models.

319290

Rubber strap

ScR

1383858
1377600
1358343

Material:
EPDM-rubber
-40°C → +120°C



kg 0,08

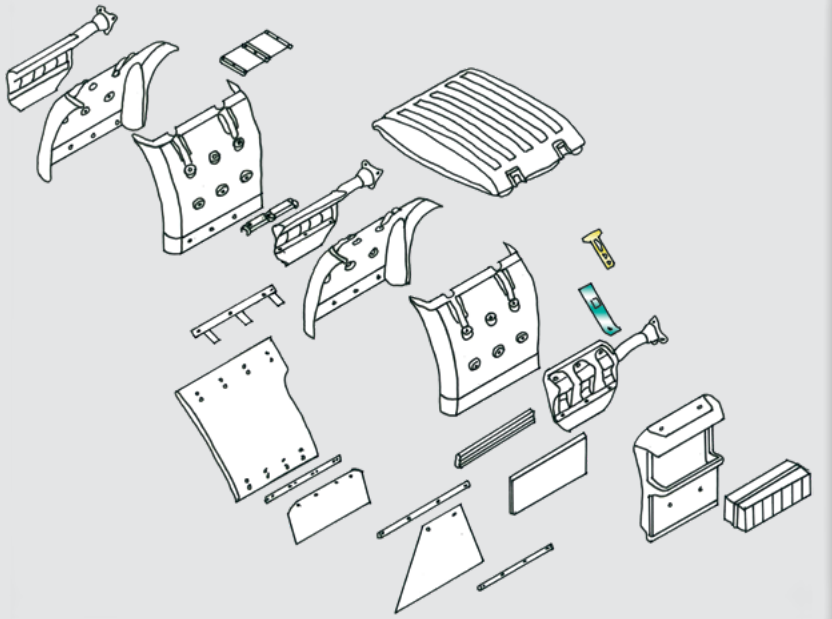

319291

Fastener

ScR

2056867
1383520
1377601

Material: Steel

239 x 40 x 2,2 mm



kg 0,20

LPGRS	9, 13, 16	08/2016 →
GPR	9, 11, 12, 13, 16	2004 - 2018
94 - 164	9, 11, 12, 14, 16	1994 - 2008

319320

373 x 191 x 2,2 mm

Bracket, upper



ScR

2208717
1378188

Material: Steel

kg 1,46

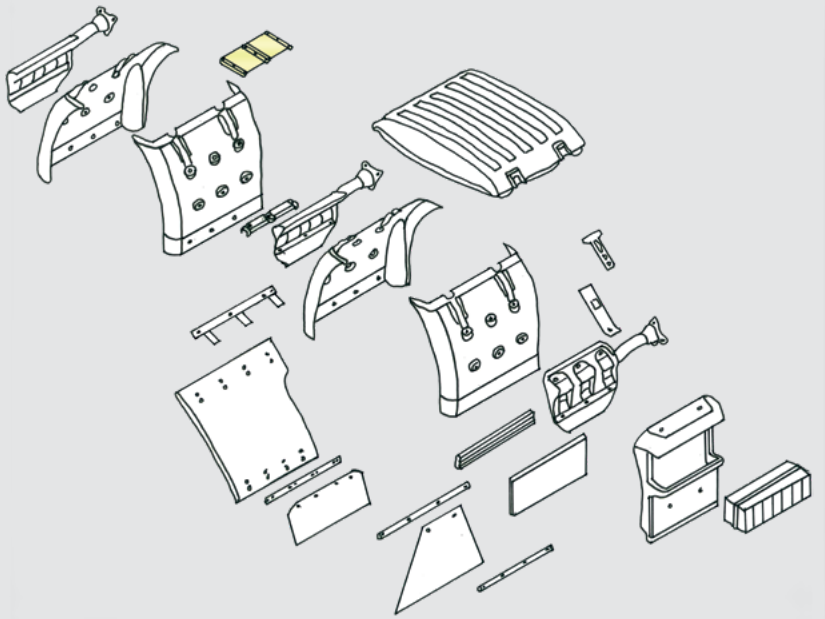

319322

373 x 141 x 2,2 mm

Bracket, upper



ScR

1934505
1378187

Material: Steel

kg 1,12

GPR	04/2004 - 2018
94 - 164	06/1995 - 12/2004

The threadless nuts fixed in the bracket are suitable only for thread-forming screws, which are included in the package.

Безрезьбовые гайки кронштейна подходят только для формирующих резьбу болтов, которые включены в пакет.

319324

Bracket, lower

ScR **1378191**

Material: Steel

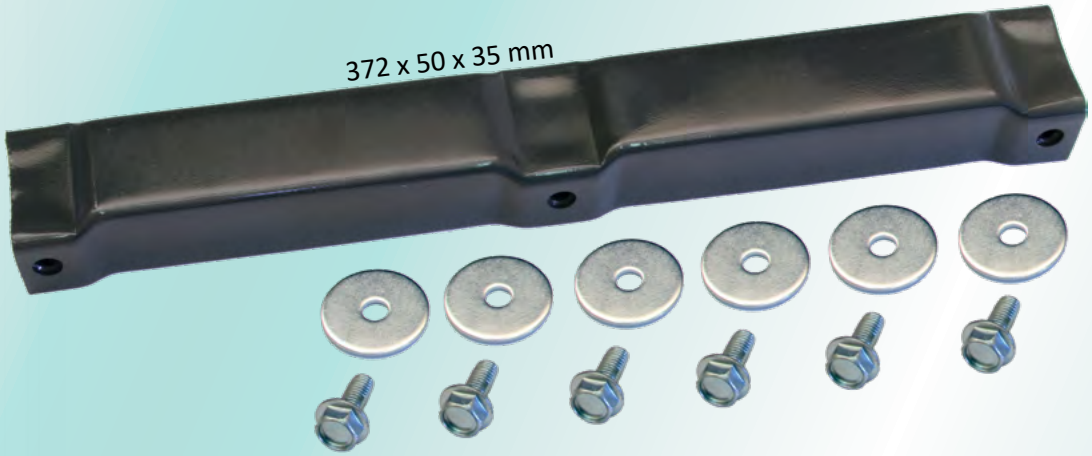

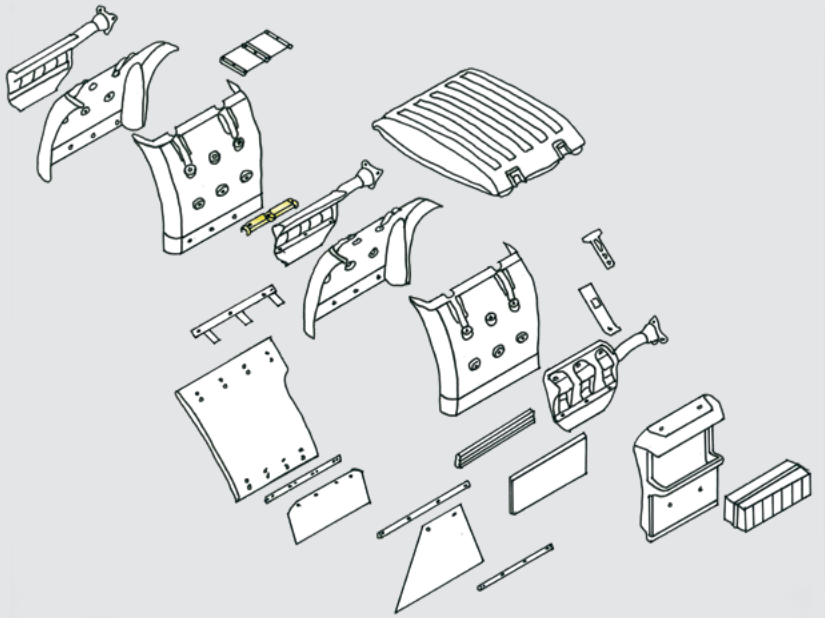

GPR	04/2004 - 2018
94 - 164	06/1995 - 12/2004

The threadless nuts fixed in the bracket are suitable only for thread-forming screws, which are included in the package.

Безрезьбовые гайки кронштейна подходят только для формирующих резьбу болтов, которые включены в пакет.

kg 0,84

319326

Bracket with nuts, LOWER

ScR **1527158**



Material:
Painted steel

Nut threads:
M08 x 1,25 mm

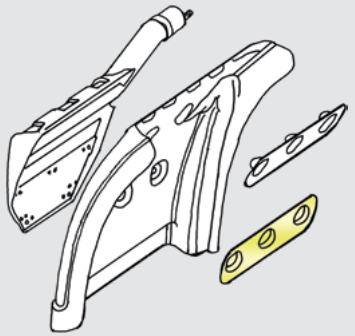

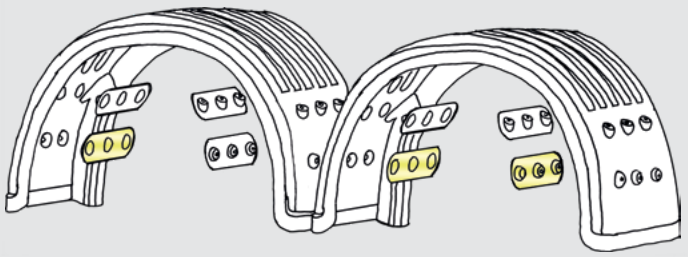

kg 0,74

Upper → 319327, 319329

LPGRS	08/2016 →
GPR	04/2004 - 2018
94 - 164	06/1995 - 12/2004

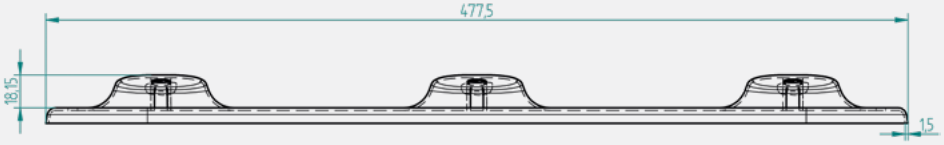

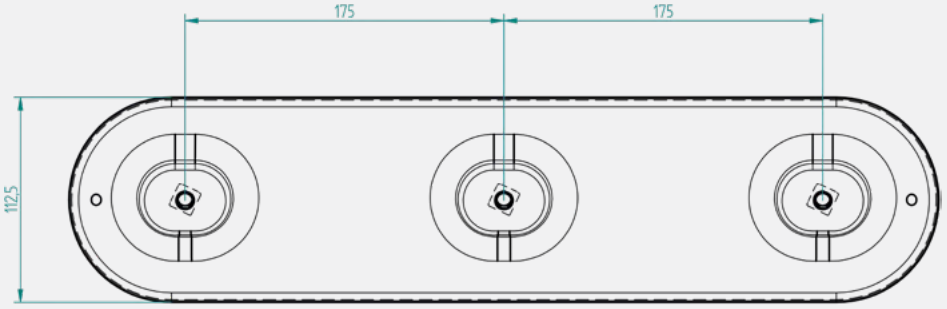

319327

Bracket with nuts, UPPER

ScR 1527159

Material:
Painted steel

Nut threads:
M08 x 1,25 mm



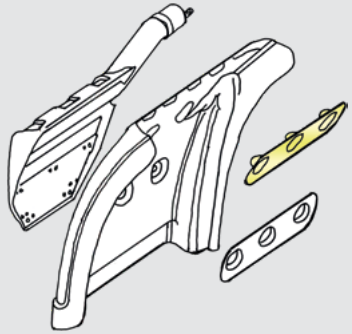

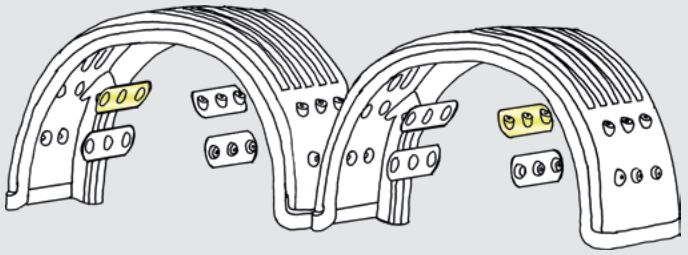

LPGRS	08/2016 →
GPR	04/2004 - 2018
94 - 164	06/1995 - 12/2004

kg 0,76

Lower → 319326

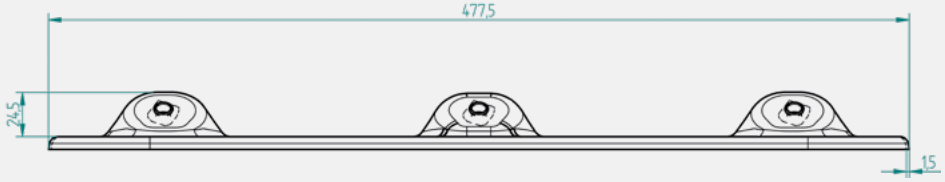

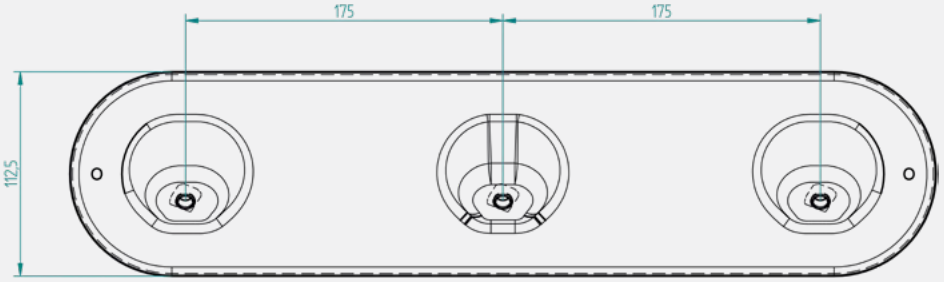

319328

Bracket without nuts, LOWER

ScR 1534239



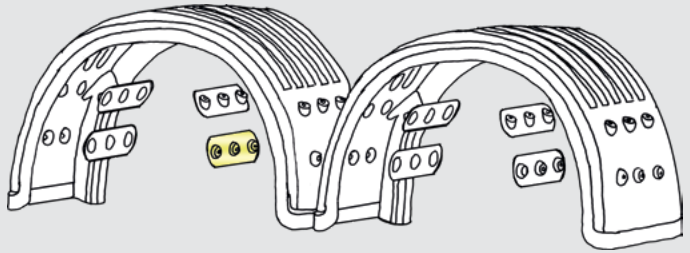

Material:
Painted steel

Holes:
Ø XX mm

kg 0,73

Upper → 319329

LPGRS	08/2016 →
GPR	04/2004 - 2018
94 - 164	06/1995 - 12/2004

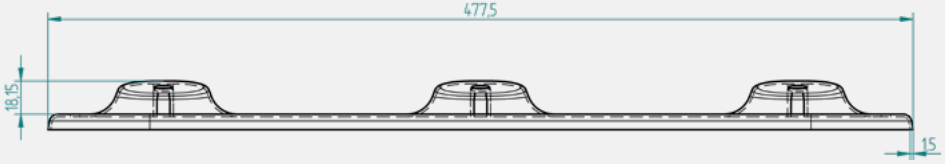

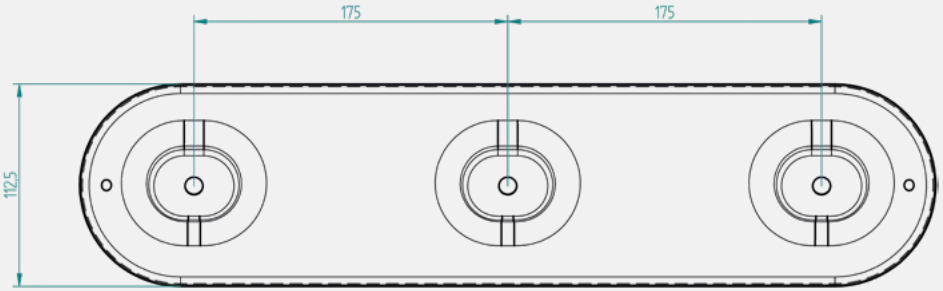

319329

Bracket without nuts, UPPER

ScR **1534240**



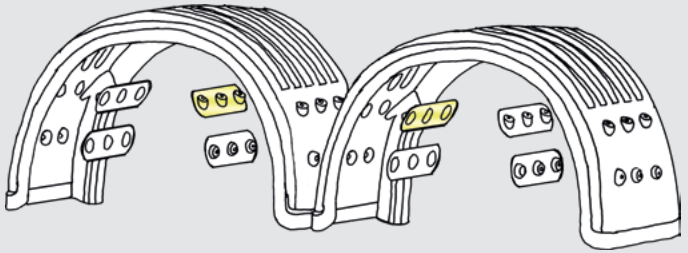

Material:
Painted steel

Holes:
Ø XX mm

kg 0,74

Lower → 319326, 319628

LPGRS	08/2016 →
GPR	04/2004 - 2018
94 - 164	06/1995 - 12/2004

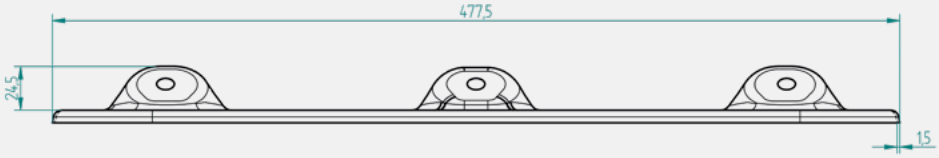

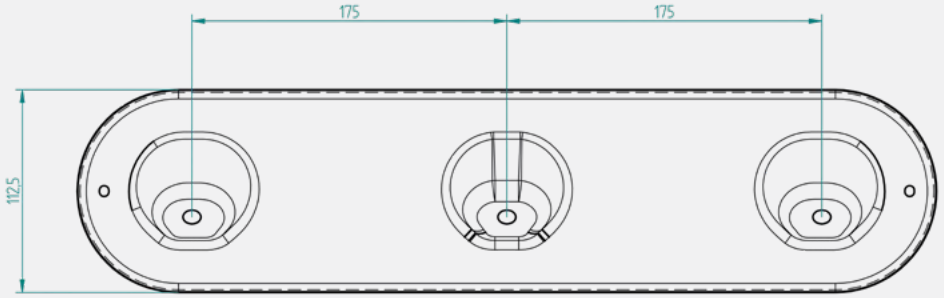

319400

Mudguard bracket M12

ScR

1725675
1457929
1358311



Material:

Steel sheet
Thickness: 1,7 mm

Tube: Ø 60 mm
Tube wall: 4,5 mm

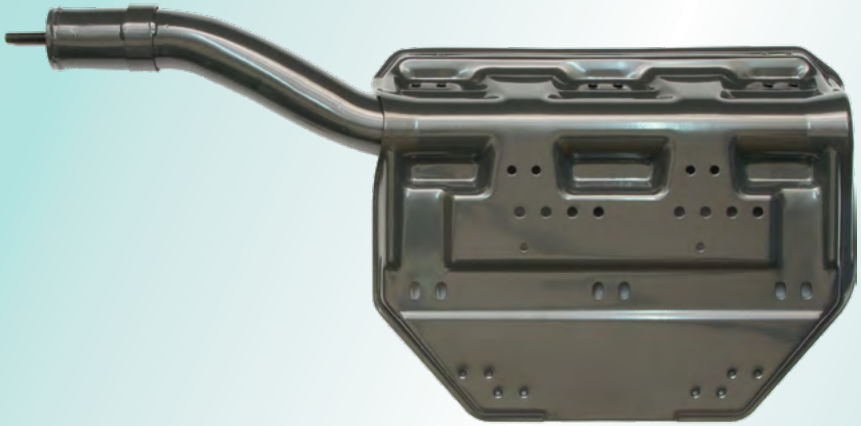

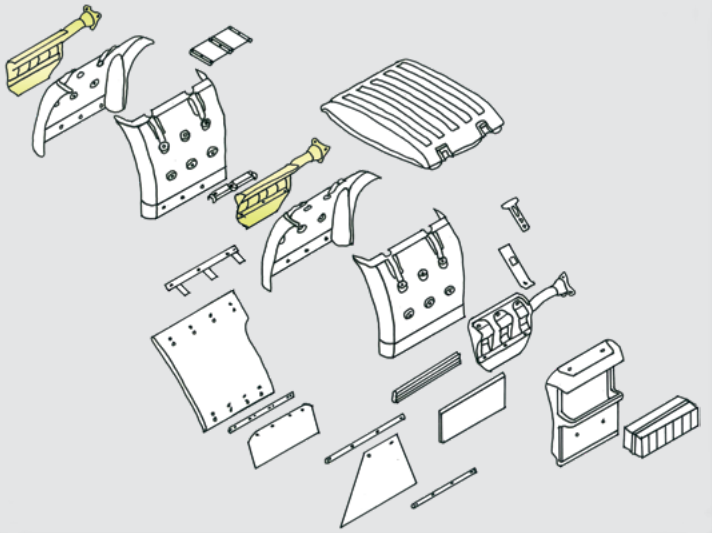

GPR 04/2004 - 2018
94 - 164 06/1995 - 12/2004


4 x 2


6x2, 6x2*4, 6x4
8x2, 8x2*6, 8x4


6 x 2/2, 6 x 2/4


8 x 2/4


8 x 4*4

→ 319401



kg 6,9

319401

Mudguard bracket M12

ScR

1725676
1457930
1358312

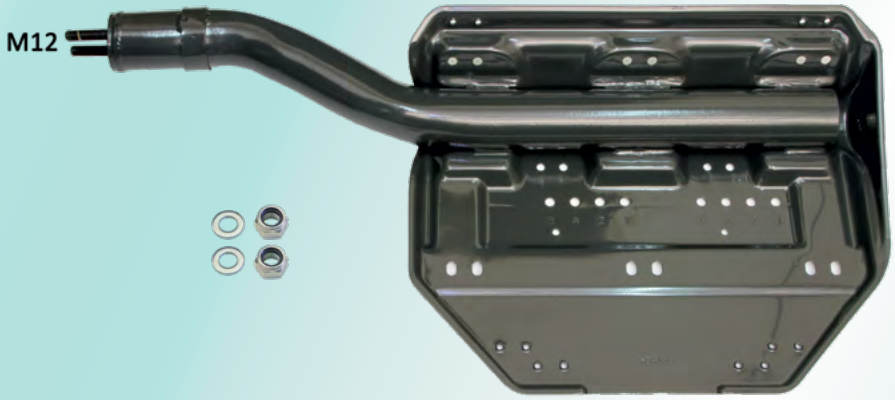

Material:

Steel sheet
Thickness: 1,7 mm

Tube: Ø 60 mm
Tube wall: 4,5 mm

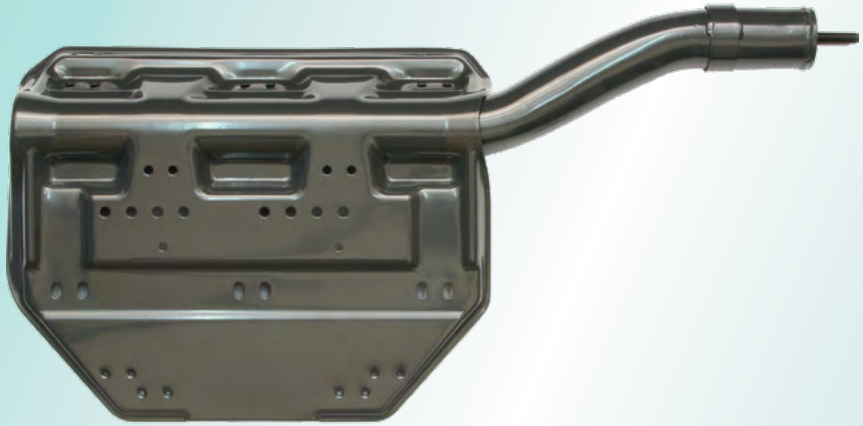

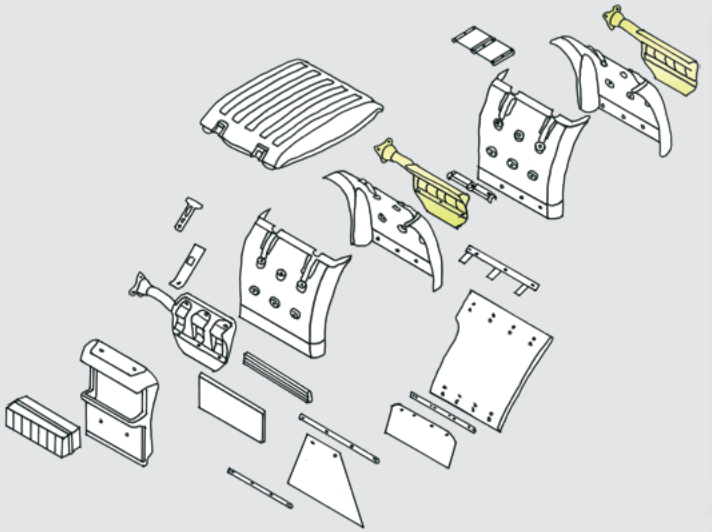

GPR	04/2004 - 2018
94 - 164	06/1995 - 12/2004

4 x 2

6x2, 6x2*4, 6x4
8x2, 8x2*6, 8x4

6 x 2/2, 6 x 2/4

8 x 2/4

8 x 4*4

→ 319400



kg 6,97

319402

Mudguard bracket M14

ScR

2054583
1927259
1784041



Material:

Steel sheet
Thickness: 1,7 mm

Tube: Ø 60 mm
Tube wall: 4,5 mm

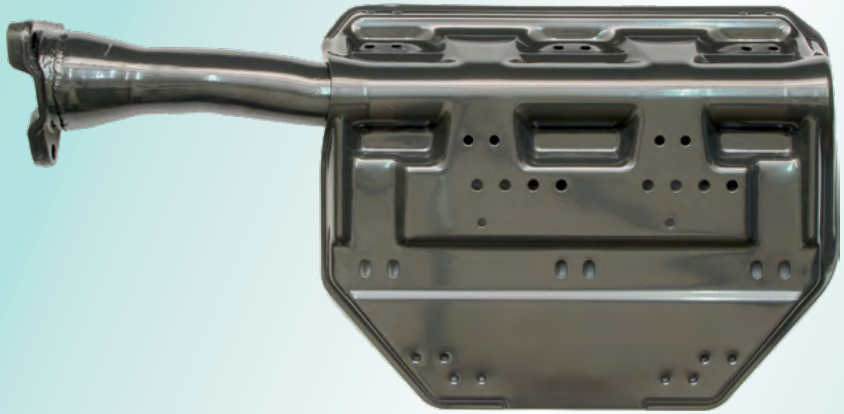

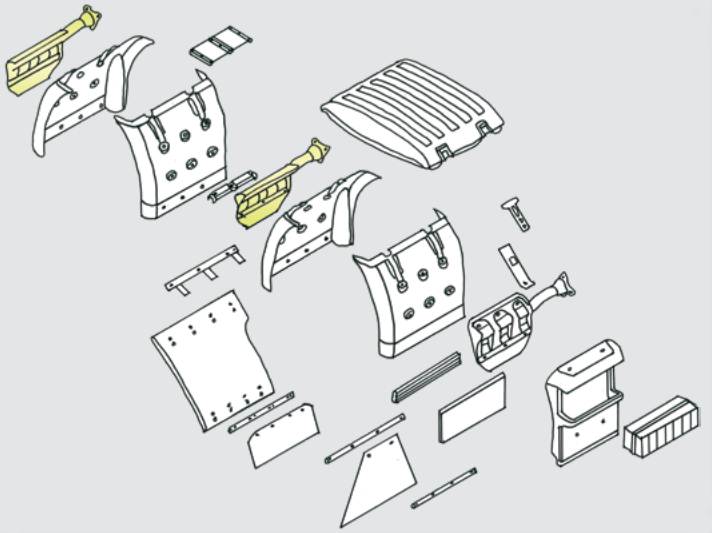

LPGRS	08/2016 →
GPR	04/2004 - 2018
94 - 164	06/1995 - 12/2004


4 x 2


6x2, 6x2*4, 6x4
8x2, 8x2*6, 8x4


6 x 2/2, 6 x 2/4


8 x 2/4, 8 x 2/6


8 x 4*4, 10 x 4*6


→ 319403



kg 7,9

319403

Mudguard bracket M14

ScR

2054584
1927260
1784042

M14 Holes



Material:

Steel sheet
Thickness: 1,7 mm

Tube: Ø 60 mm
Tube wall: 4,5 mm

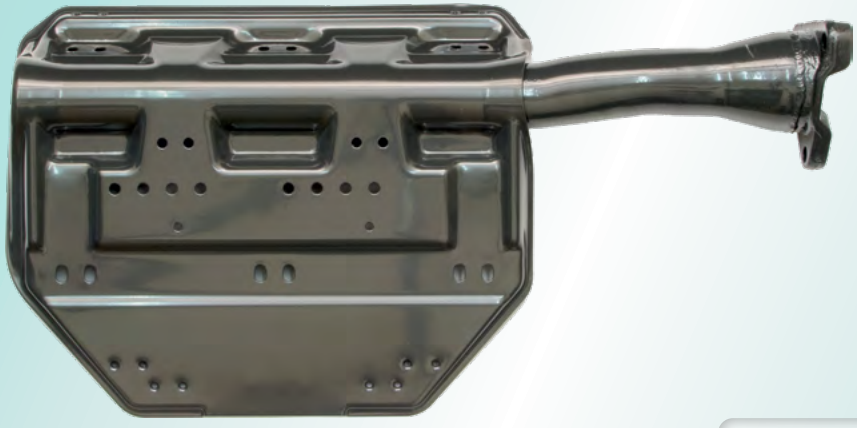

→ 319402



kg 7,8

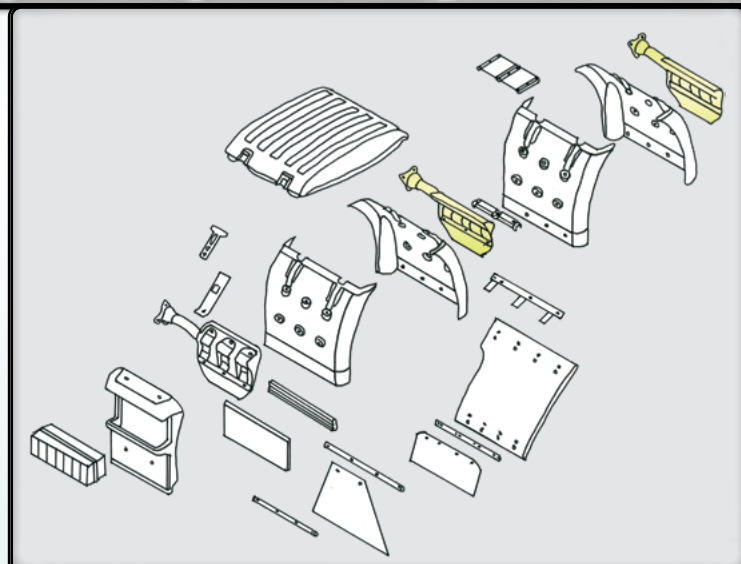

LPGRS	08/2016 →
GPR	04/2004 - 2018
94 - 164	06/1995 - 12/2004


4 x 2


6x2, 6x2*4, 6x4
8x2, 8x2*6, 8x4


6 x 2/2, 6 x 2/4


8 x 2/4, 8 x 2/6


8 x 4*4, 10 x 4*6

319406

Mudguard bracket M16

ScR

1725662
1742376
1457886



Material:

Steel sheet
Thickness: 1,7 mm

Tube: Ø 60 mm
Tube wall: 5 mm



kg 6,6

→ 319407



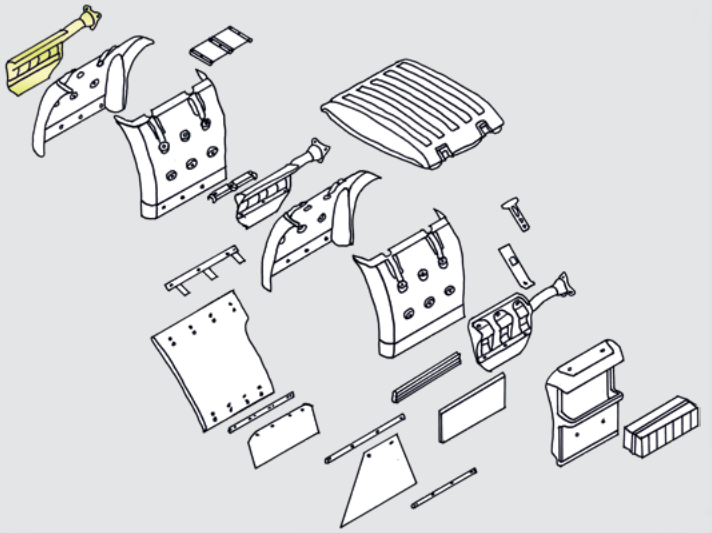

GPR	04/2004 - 2018
94 - 164	06/1995 - 12/2004

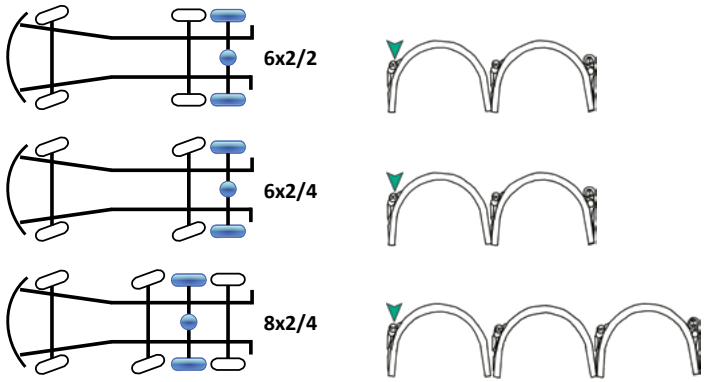

319407

Mudguard bracket M16

ScR

1725661
1742375
1457885



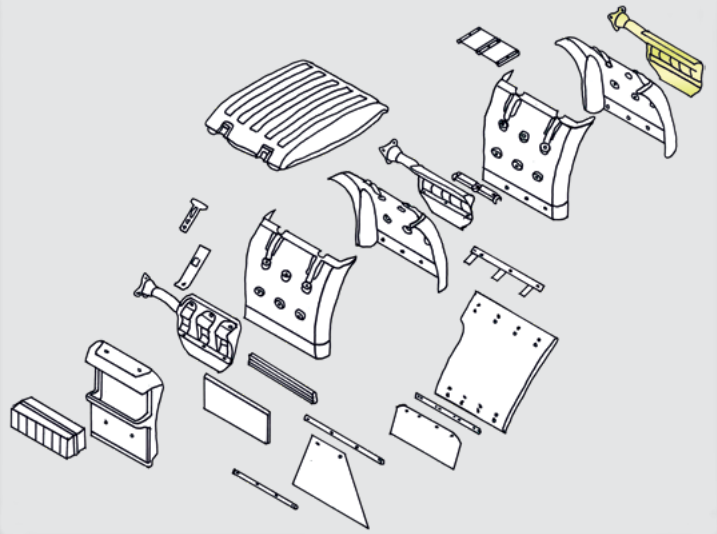

Material:

Steel sheet
Thickness: 1,7 mm

Tube: Ø 60 mm
Tube wall: 5 mm



kg 6,8

→ 319406



GPR	04/2004 - 2018
94 - 164	06/1995 - 12/2004

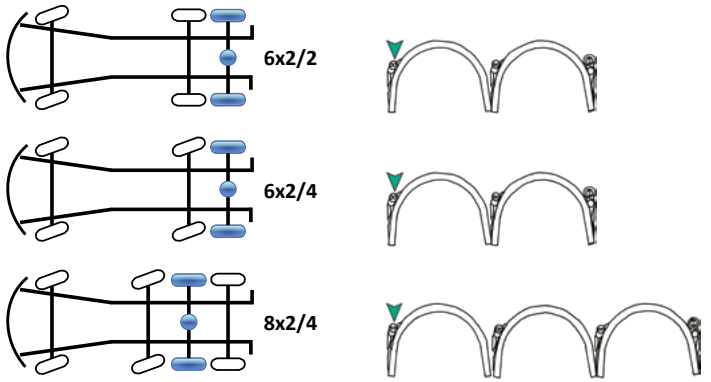

319408

Mudguard bracket

ScR 2476466 2054597 1874853

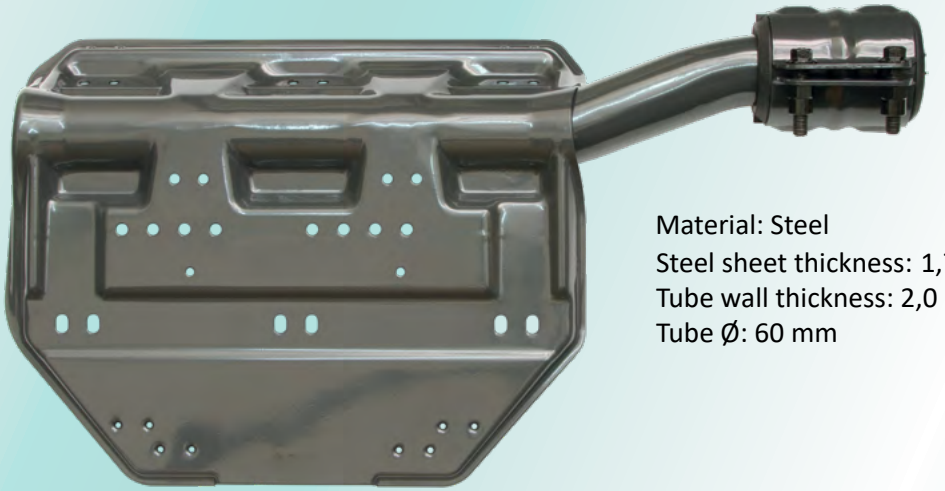

Material: Steel
Steel sheet thickness: 1,7 mm
Tube wall thickness: 2,0 mm
Tube Ø: 60 mm

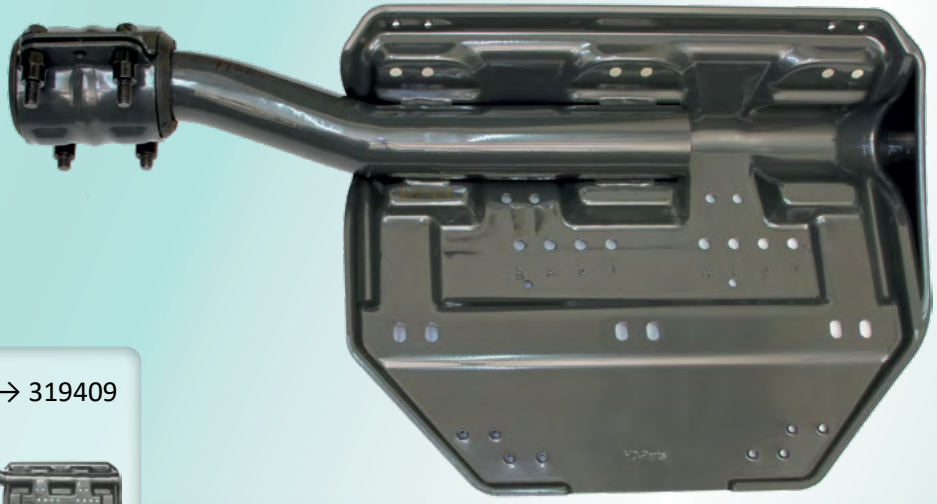

→ 319409



kg 5,9

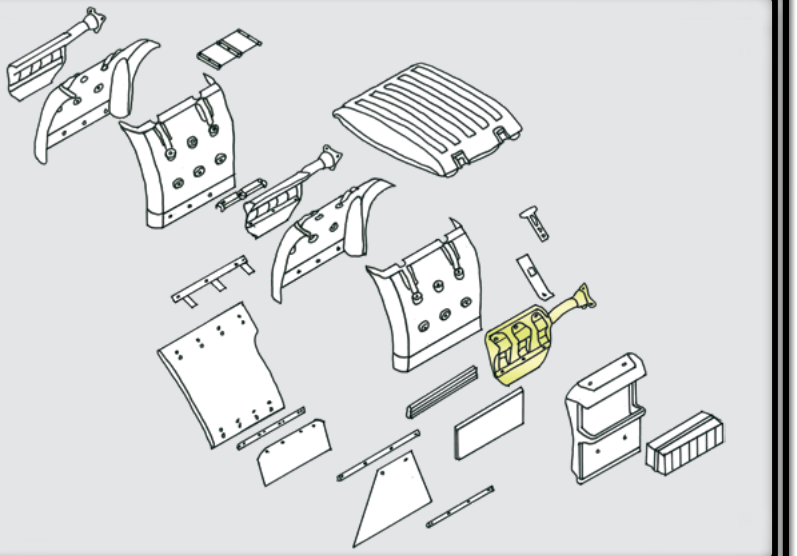

LPGRS 08/2016 → LHD RHD
GPR ↓

A4 x 2 Z Normal →01/2012
→2074295, →5287449, →9166760, →3803816

A4 x 2 A, B Nordic version

4 x 2, 4 x 4 Z Normal 10/2010→
w/ modular hole pattern
2058789→, 5250079→, 9153310→, 3682408→

A6x2/4, A6x2/2 A, B →02/2010
w/o modular hole pattern
→2051659, →5234475, →9146010, →3656173

A6x2/4, A6x2/2 A, B Nordic version
w/ modular hole pattern

6 x 4, 8 x 4 Z BT201B/I, 301S 09/2013→
In one piece rear leaf suspension
2090505→, 9179157→, 5332801→, 3848097→

319409

Mudguard bracket

ScR 2476465 2054598 1874854

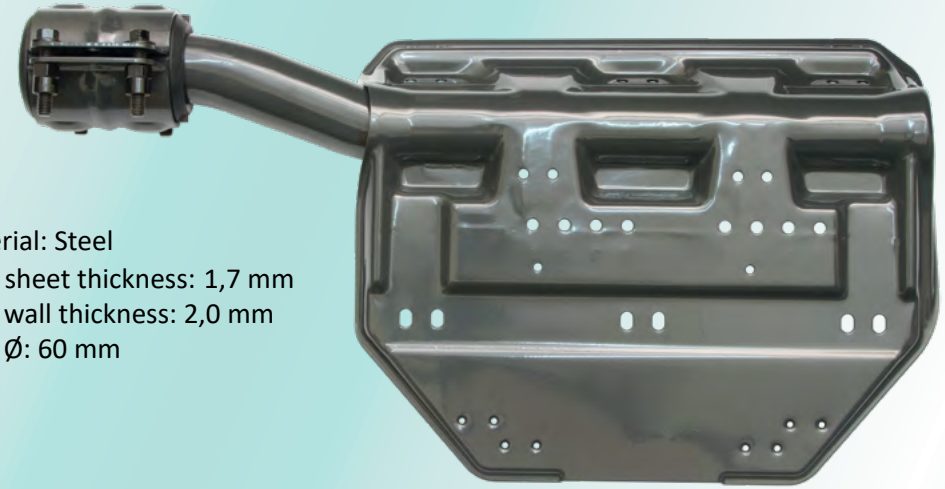

Material: Steel
Steel sheet thickness: 1,7 mm
Tube wall thickness: 2,0 mm
Tube Ø: 60 mm

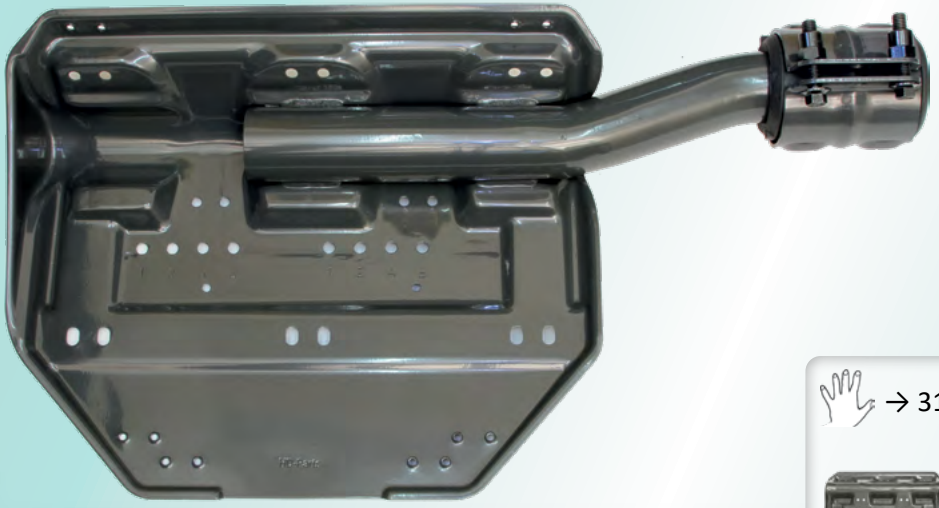

kg 5,8

→ 319408



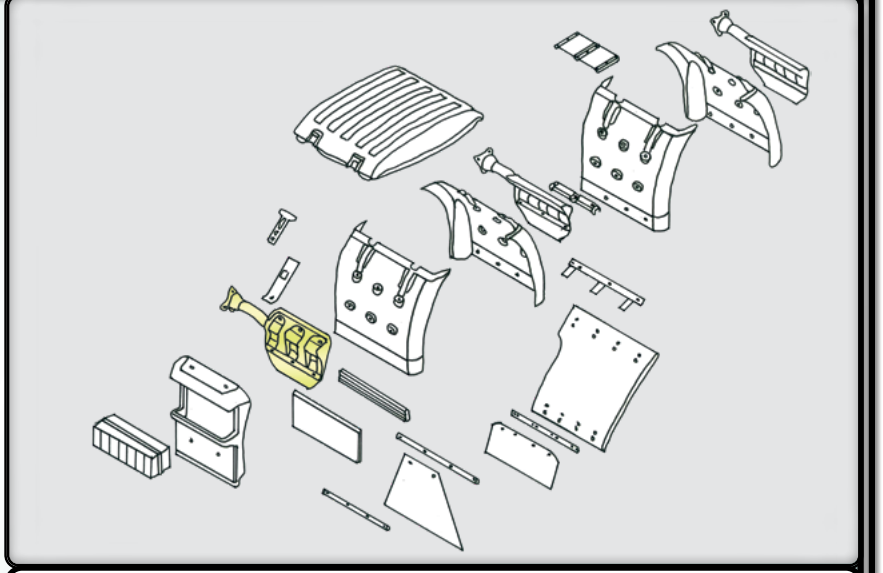

LPGRS 08/2016 → LHD RHD
GPR ↓

A4 x 2 Z Normal →01/2012
→2074295, →5287449, →9166760, →3803816

A4 x 2 A, B Nordic version

4 x 2, 4 x 4 Z Normal 10/2010→
w/ modular hole pattern
2058789→, 5250079→, 9153310→, 3682408→

A6x2/4, A6x2/2 A, B →02/2010
w/o modular hole pattern
→2051659, →5234475, →9146010, →3656173

A6x2/4, A6x2/2 A, B Nordic version
w/ modular hole pattern

6 x 4, 8 x 4 Z BT201B/I, 301S 09/2013→
In one piece rear leaf suspension
2090505→, 9179157→, 5332801→, 3848097→

319412

Mudguard bracket

ScR

2054585
1927261
1801815

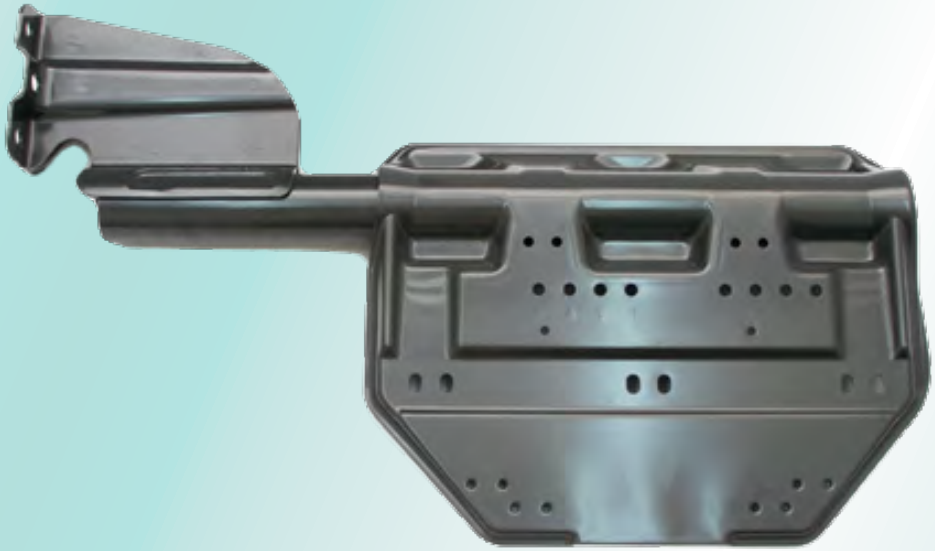

Material:

Steel sheet
Thickness: 1,7 mm

Tube: Ø 60 mm
Tube wall: 4,5 mm

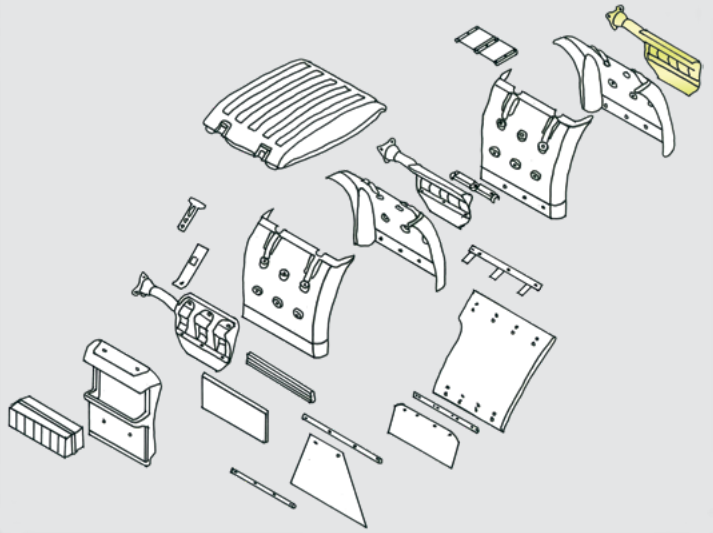

LPGRS	08/2016 →
GPR	04/2004 - 2018

BT 200 B/I
BT 201 B/I
BT 300 B/I
BT 301 B/I/S

A6 x 2/2 A/B
A6 x 2/4 A/B
B6 x 2/2 A/B
B6 x 2/4 A/B
8 x 2/4 A/B

→ 319413



kg 6,86

319413

Mudguard bracket

ScR

2054586
1927262
1801816

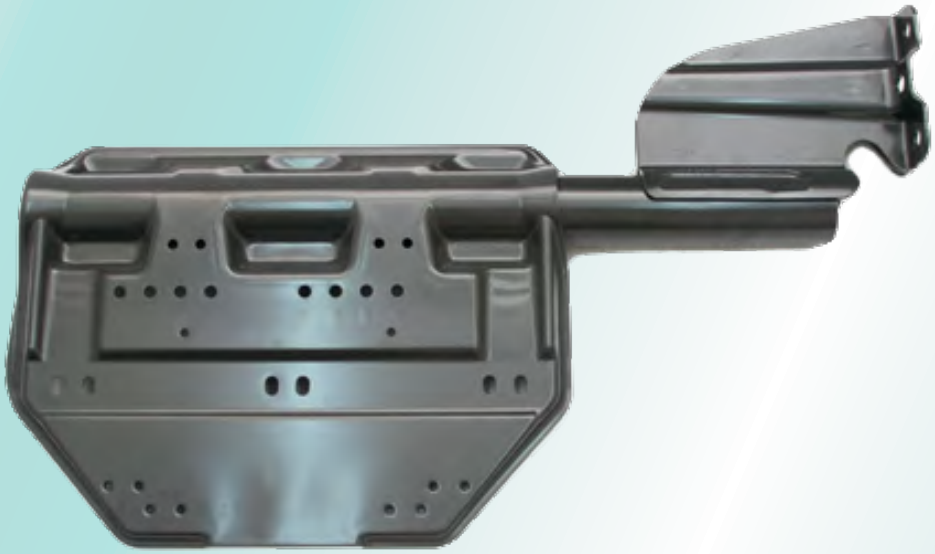

Material:

Steel sheet
Thickness: 1,7 mm

Tube: Ø 60 mm
Tube wall: 4,5 mm

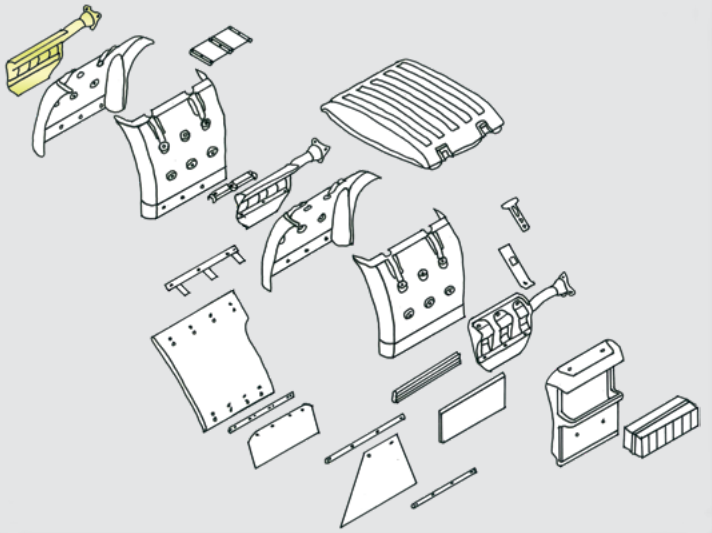

LPGRS	08/2016 →
GPR	04/2004 - 2018

BT 200 B/I
BT 201 B/I
BT 300 B/I
BT 301 B/I/S

A6 x 2/2 A/B
A6 x 2/4 A/B
B6 x 2/2 A/B
B6 x 2/4 A/B
8 x 2/4 A/B

→ 319412



kg 6,85

319416

Mudguard bracket

ScR

2054581
1927257
1721891



Material:

Steel sheet
Thickness: 1,7 mm

Tube: Ø 60 mm
Tube wall: 4,5 mm

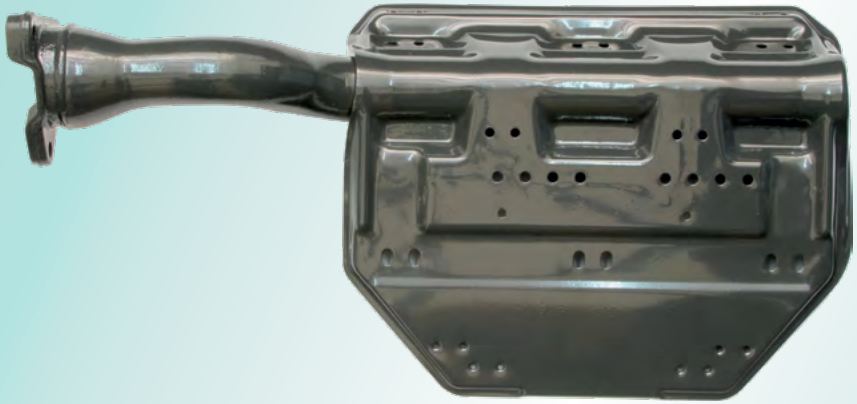

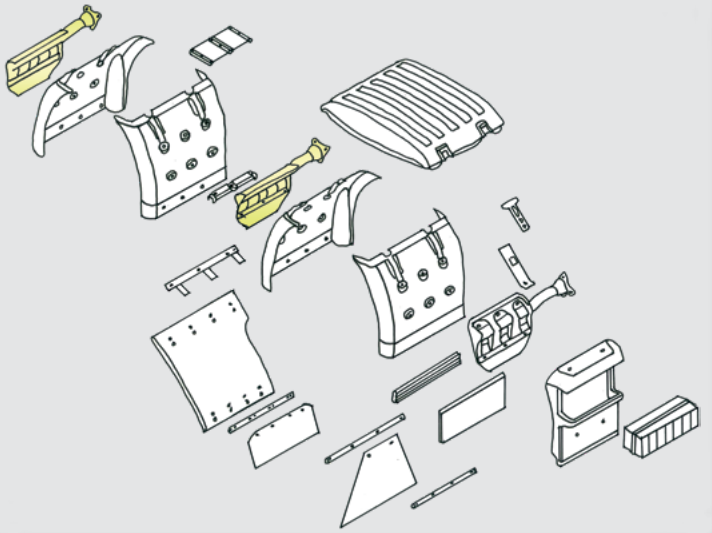

LPGRS	08/2016 →
GPR	04/2004 - 2018
94 - 164	06/1995 - 12/2004

4 x 2

94 - 164	06/1995 - 12/2004

6x2, 6x2*4, 6x4
8x2, 8x2*6, 8x4

→ 319417



kg 8,1

319417

Mudguard bracket

ScR

2054582
1927258
1721892



Material:

Steel sheet
Thickness: 1,7 mm

Tube: Ø 60 mm
Tube wall: 4,5 mm



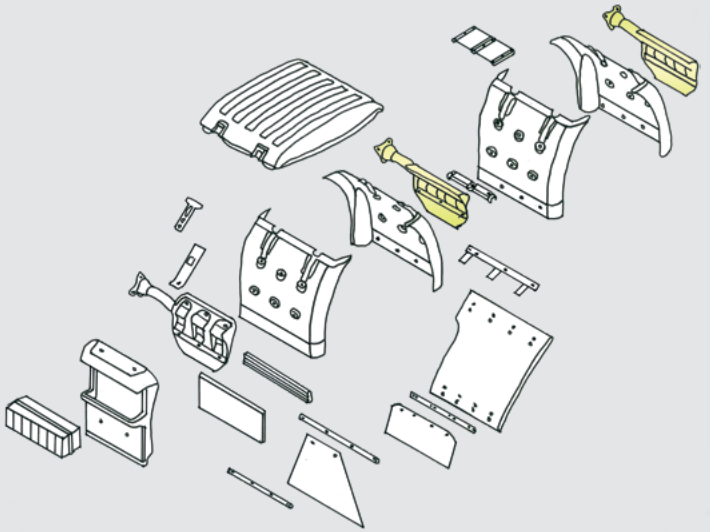

LPGRS	08/2016 →
GPR	04/2004 - 2018
94 - 164	06/1995 - 12/2004

4 x 2

94 - 164	06/1995 - 12/2004

6x2, 6x2*4, 6x4
8x2, 8x2*6, 8x4

→ 319416



kg 8,1

319428

Mudguard bracket

ScR

HD´s own design

Material:

Steel sheet
Thickness: 1,7 mm





kg 2,32

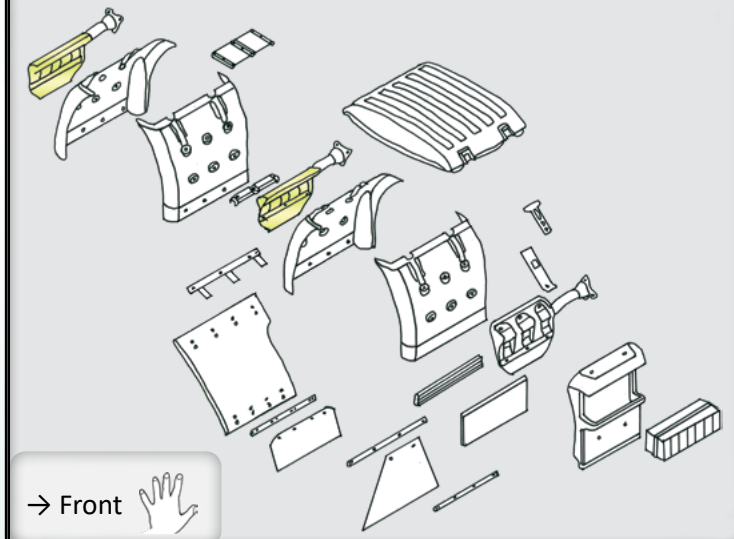

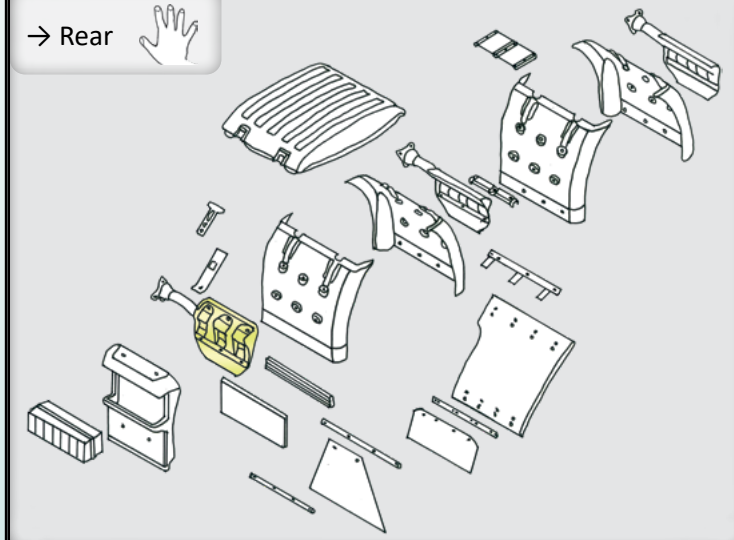

LPGRS	08/2016 →
GPR	04/2004 - 2018
94 - 164	06/1995 - 12/2004

319429

Mudguard bracket

ScR

HD´s own design

Material:

Steel sheet
Thickness: 1,7 mm





kg 2,32

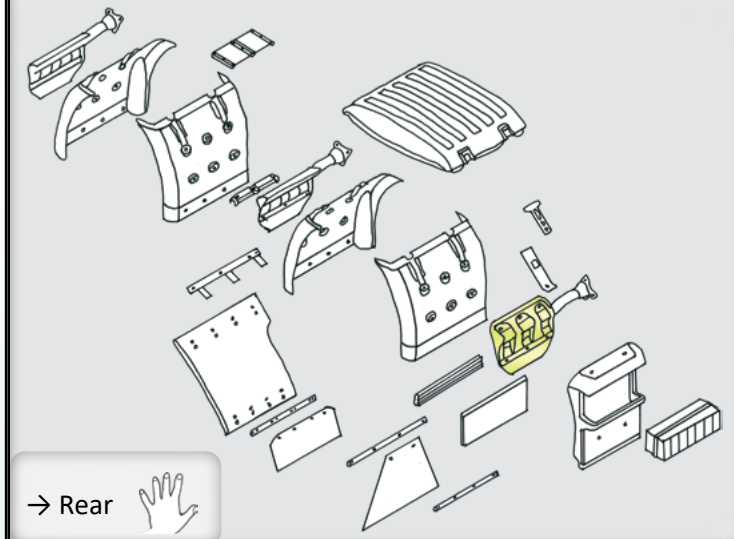

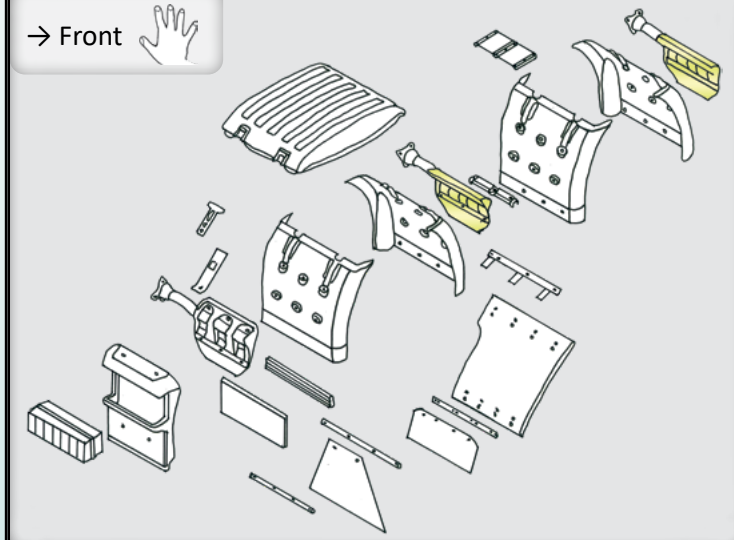

LPGRS	08/2016 →
GPR	04/2004 - 2018
94 - 164	06/1995 - 12/2004

319430

Mudguard bracket M14

ScR

2054579
1721893



Material:

Steel sheet
Thickness: 1,7 mm

Tube: Ø 60 mm
Tube wall: 4,5 mm

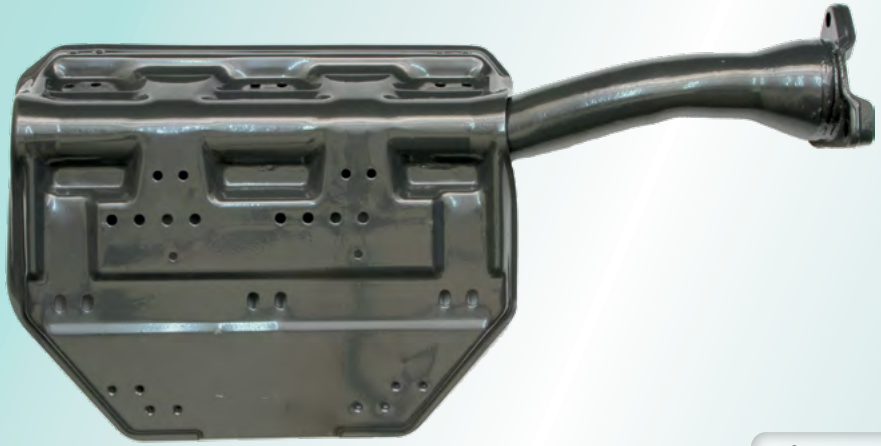

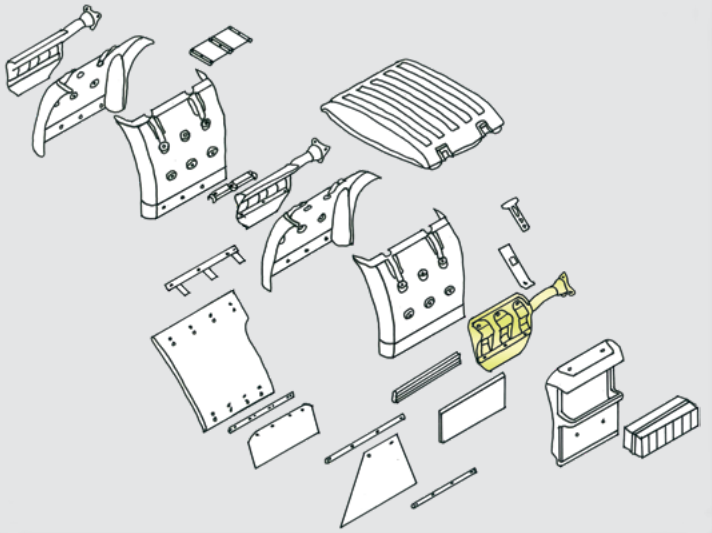

LPGRS	08/2016 →
GPR	04/2004 - 2018
94 - 164	06/1995 - 12/2004

4 x 2

6x2, 6x2*4, 6x4
8x2, 8x2*6, 8x4

8 x 2/4, 8 x 2/6
8 x 4*4, 10 x 4*6

→ 319431



kg 7,25

319431

Mudguard bracket M14

ScR

2054580
1721894



Material:

Steel sheet
Thickness: 1,7 mm

Tube: Ø 60 mm
Tube wall: 4,5 mm

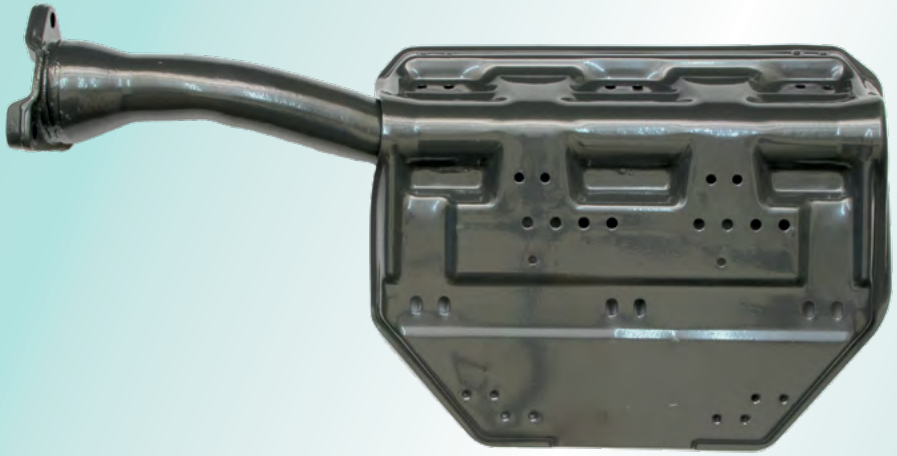

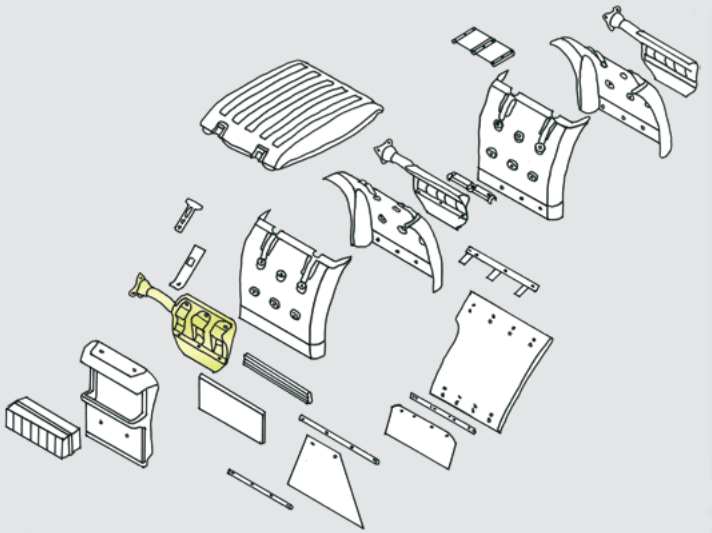

LPGRS	08/2016 →
GPR	04/2004 - 2018
94 - 164	06/1995 - 12/2004

4 x 2

6x2, 6x2*4, 6x4
8x2, 8x2*6, 8x4

8 x 2/4, 8 x 2/6
8 x 4*4, 10 x 4*6

→ 319430



kg 7,25

319436

Mudguard bracket

M16



ScR

2054601
1725663
1457887
1358315



Material:

Steel sheet
Thickness: 1,7 mm

Tube: Ø 60 mm
Tube wall: 4,5 mm

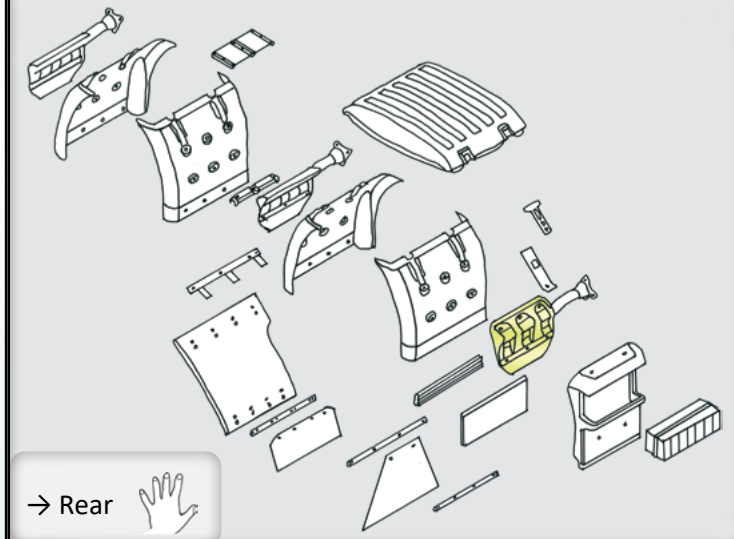

→ Rear

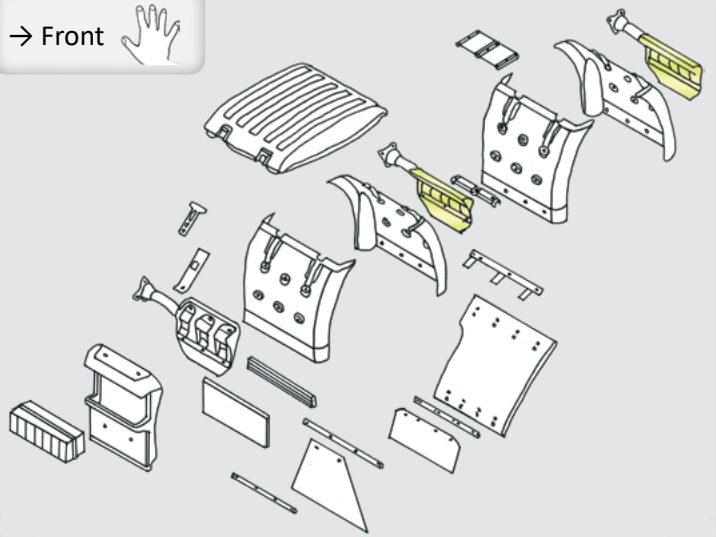

→ Front



4 x 2



6x2, 6x2*4, 6x4, 8x2, 8x2*6, 8x4



6 x 2, 8x2



6 x 2/2, 6 x 2/4



8 x 2/4, 8 x 2/6, 8 x 4*4, 10 x 4*6

→ 319437



kg 6,93

LPGRS	08/2016 →
GPR	04/2004 - 2018
94 - 164	06/1995 - 12/2004

319437

Mudguard bracket



ScR

2054602
1825664
1457888
1358316



Material:

Steel sheet
Thickness: 1,7 mm

Tube: Ø 60 mm
Tube wall: 4,5 mm


4 x 2


6x2, 6x2*4, 6x4, 8x2, 8x2*6, 8x4


6 x 2, 8x2


6 x 2/2, 6 x 2/4


8 x 2/4, 8 x 2/6, 8 x 4*4, 10 x 4*6

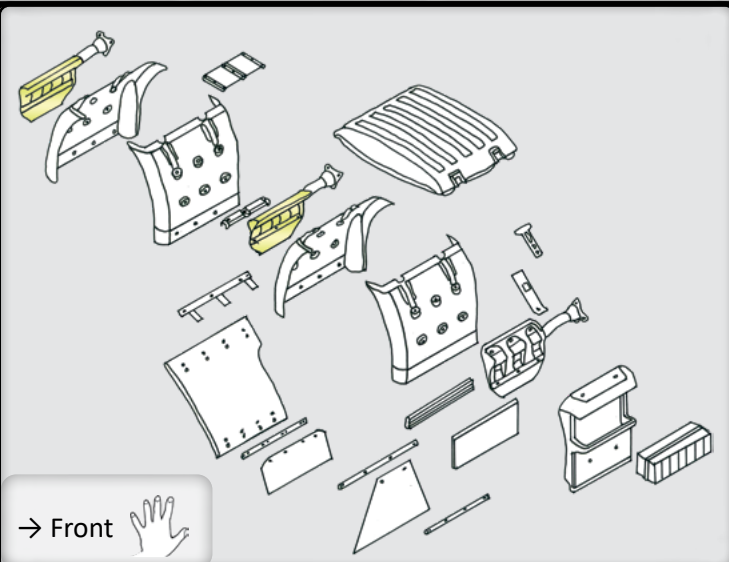

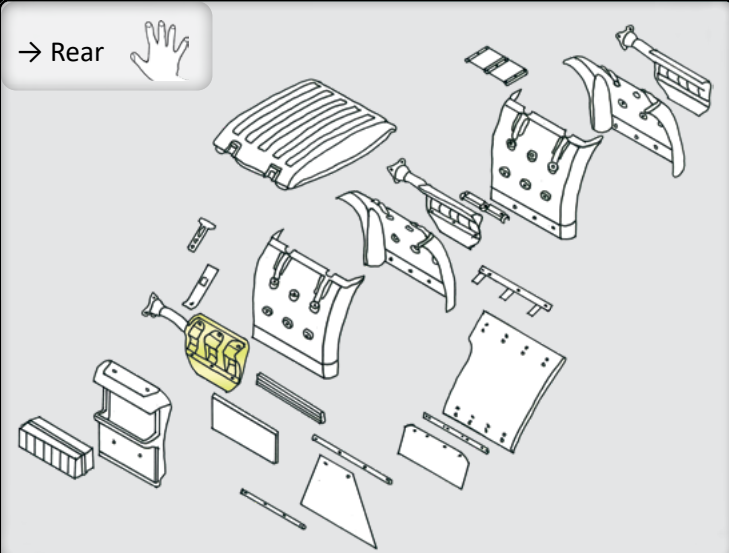

LPGRS	08/2016 →
GPR	04/2004 - 2018
94 - 164	06/1995 - 12/2004

→ 319436



kg 6,95

319438

Mudguard bracket M16



ScR

2054603
1725671
1457895
1400899

Material:

Steel sheet
Thickness: 1,7 mm

Tube: Ø 60 mm
Tube wall: 4,5 mm



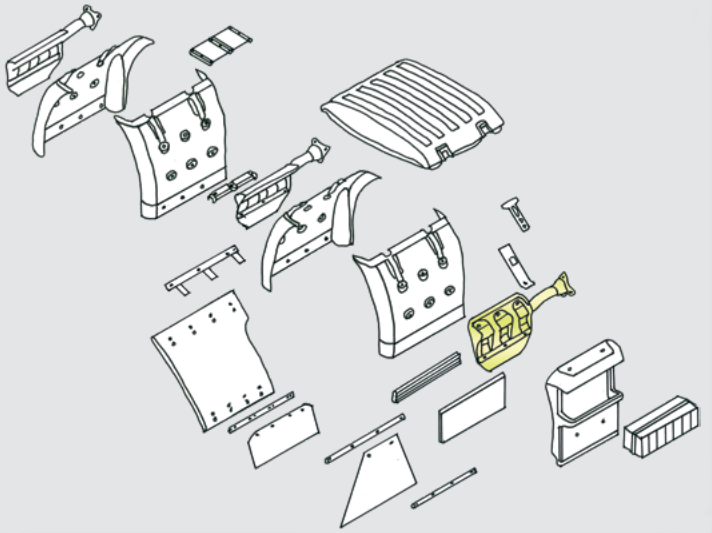

GPR 04/2004 - 2018
94 - 164 06/1995 - 12/2004

4 x 2

6x2, 6x2*4, 6x4
8x2, 8x2*6, 8x4
6 x 2/2, 6 x 2/4

→ 319439



kg 6,7

319439

Mudguard bracket M16



ScR

2054604
1725672
1457896
1400900

Material:

Steel sheet
Thickness: 1,7 mm

Tube: Ø 60 mm
Tube wall: 4,5 mm

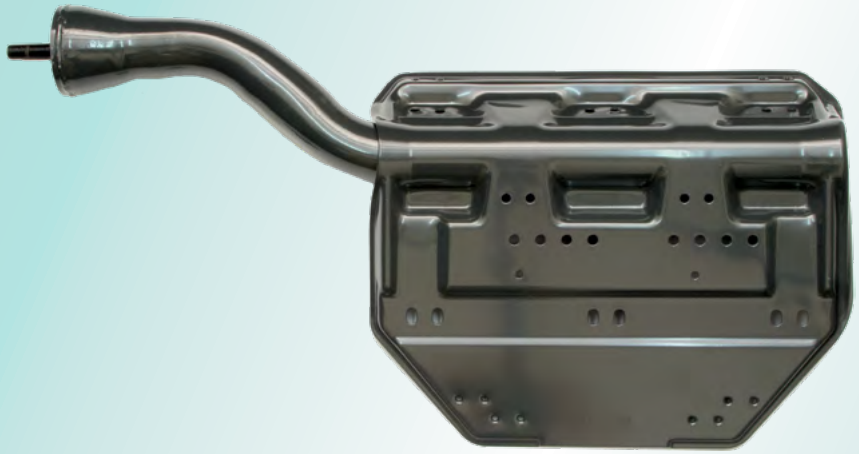

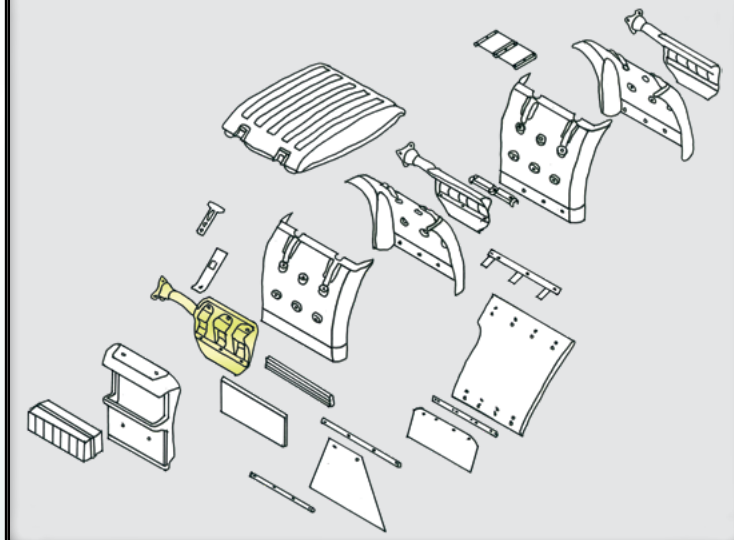

GPR 04/2004 - 2018
94 - 164 06/1995 - 12/2004

4 x 2

6x2, 6x2*4, 6x4
8x2, 8x2*6, 8x4
6 x 2/2, 6 x 2/4

→ 319438



kg 6,65

319440

Mudguard bracket, Rear, Left

ScR

1725669
1742383



Material:
Steel sheet



kg 6,62

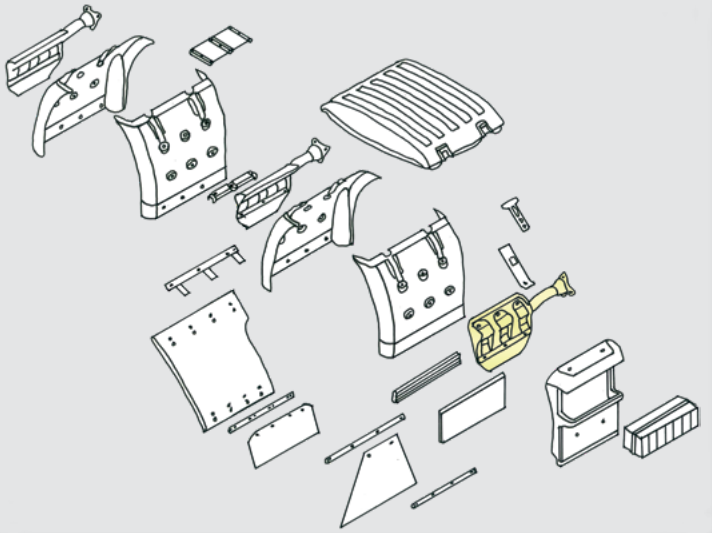

GPR 2004 - 2018
4 x 2 Air tractor extra low
A6x2/2 AB, A6x2/4 AB ab4100

94 - 164 1994 - 2008
4 x 2 Air chassis extra low
6x2/2, 6x2/4 ab4100

319441

Mudguard bracket, Rear, Right

ScR

1725670
1742384

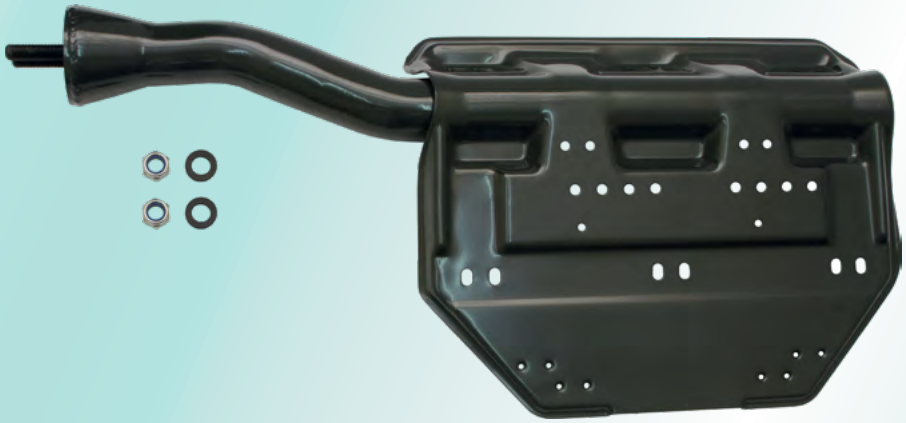

Material:
Steel sheet



kg 6,63

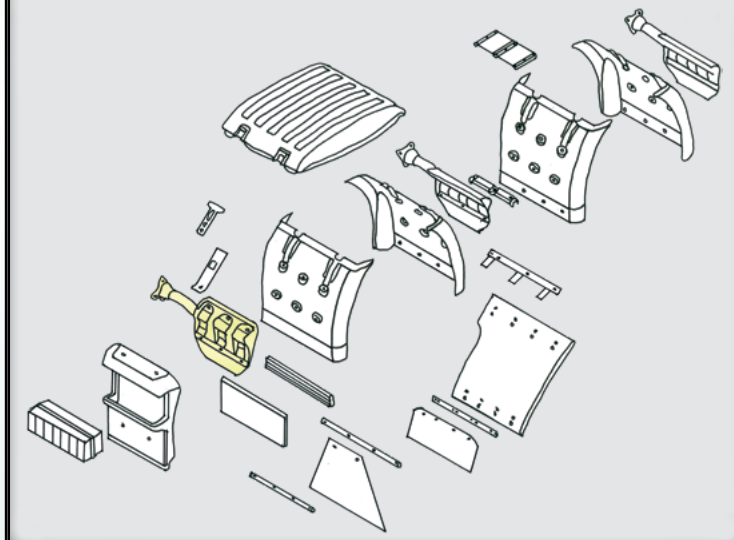

GPR 2004 - 2018
4 x 2 Air tractor extra low
A6x2/2 AB, A6x2/4 AB ab4100

94 - 164 1994 - 2008
4 x 2 Air chassis extra low
6x2/2, 6x2/4 ab4100

319434

Mudguard bracket

ScR

2800401
2476495
2054589
1942252
1792685



Vibration damper parts included.

Material:

Steel sheet
Thickness: 1,7 mm

Tube: Ø 60 mm
Tube wall: 2,0 mm



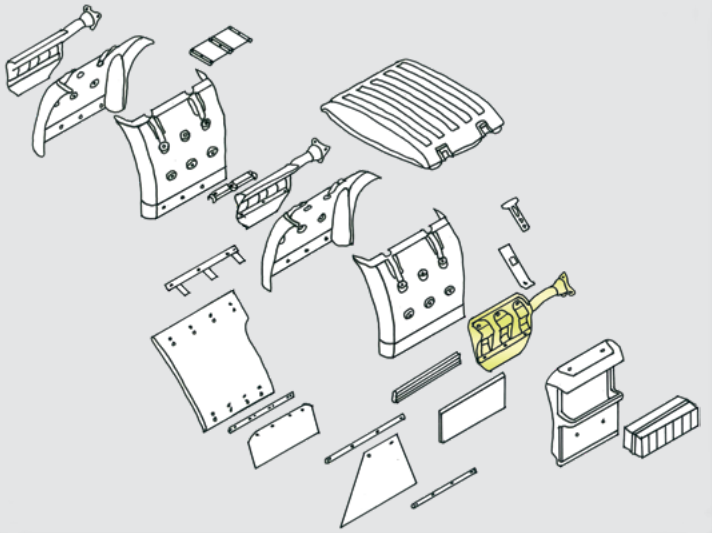

LPGRS	08/2016 →
GPR	04/2004 - 2018
94 - 164	06/1995 - 12/2004



4 x 2



6x2, 6x2*4, 6x4
8x2, 8x2*6, 8x4



8 x 2/4, 8 x 2/6
8 x 4*4, 10 x 4*6

Suitable vibration damper parts:

HD 319392



HD 319390



→ 319435



kg 5,9

319435

Mudguard bracket

ScR

2800402
2476494
2054590
1942253
1792686



Vibration damper parts included.

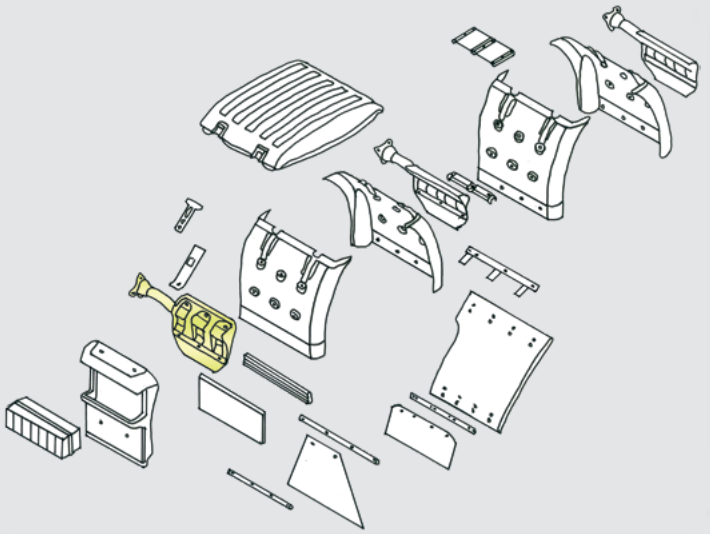

Material:

Steel sheet
Thickness: 1,7 mm

Tube: Ø 60 mm
Tube wall: 2,0 mm

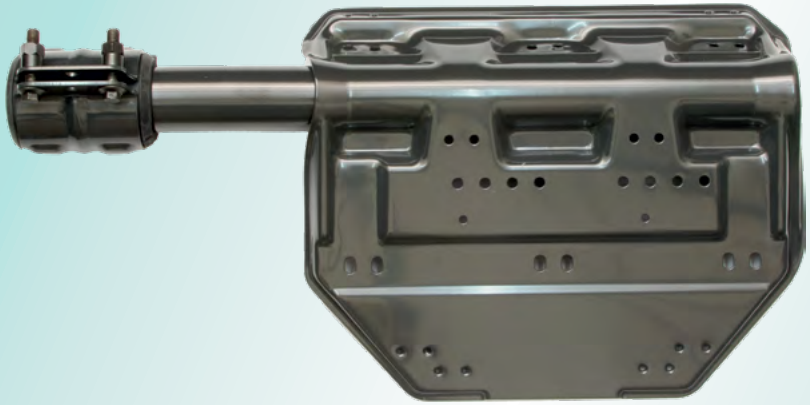

LPGRS	08/2016 →
GPR	04/2004 - 2018
94 - 164	06/1995 - 12/2004



4 x 2



6x2, 6x2*4, 6x4
8x2, 8x2*6, 8x4



8 x 2/4, 8 x 2/6
8 x 4*4, 10 x 4*6

Suitable vibration damper parts:

HD 319392



HD 319390



→ 319434



kg 5,94

319444

Mudguard bracket

ScR

2476461
2054593
1927798



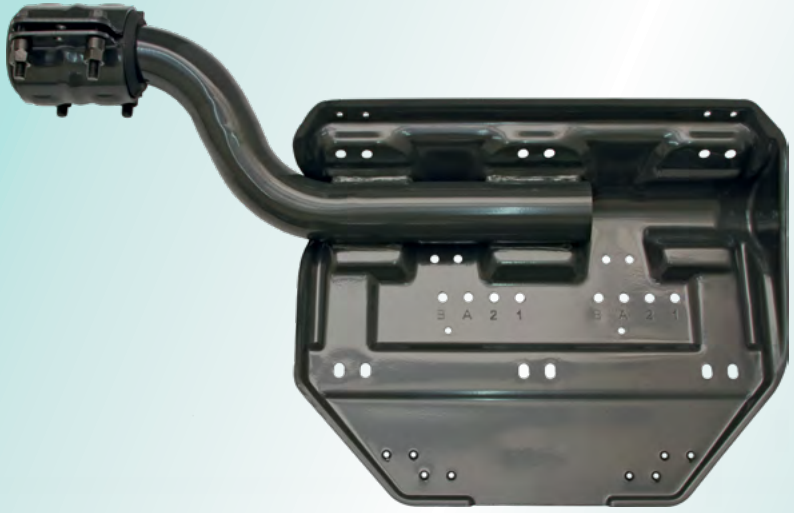

kg 6,17

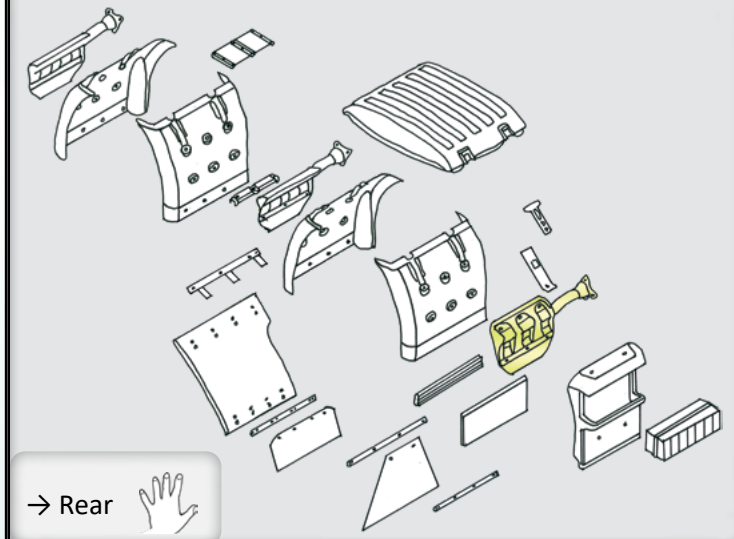

LPGRS 08/2016→

A4x2, 6x2, 6x4, 6x2*4, 8x2, 8x4, 6x2/4, 6x2/2 A/B

Tractor with battery box in rear

Rigid 6x4, 8x4 BT201, BT300B, BT301

Tractor A6x4, A6x6, 8x4 BT300B, BT301S
Bogie distance 1445/1450 Frame, rear end V

GPR 2004 - 2018

6x4Z, 8x4Z BT200B, BT200I, B300B, B300I, BT201B
A4x2, A6x2/2, A6x2/4, A6x2, A6x4 A/B

94 - 164

6x4Z, 8x4Z BT200B, BT200I, B300B, B300I, BT201B

319445

Mudguard bracket

ScR

2476460
2054594
1927799





kg 6,17

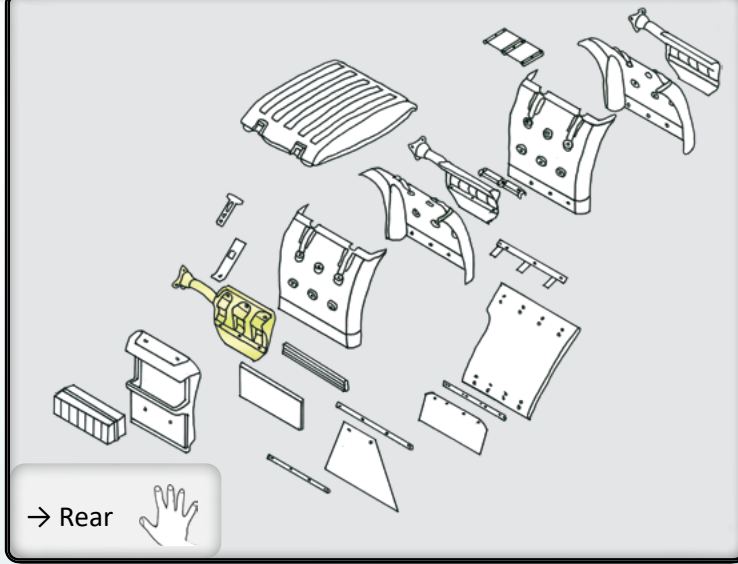

LPGRS 08/2016→

A4x2, 6x2, 6x4, 6x2*4, 8x2, 8x4, 6x2/4, 6x2/2 A/B

Tractor with battery box in rear

Rigid 6x4, 8x4 BT201, BT300B, BT301

Tractor A6x4, A6x6, 8x4 BT300B, BT301S
Bogie distance 1445/1450 Frame, rear end V

GPR 2004 - 2018

6x4Z, 8x4Z BT200B, BT200I, B300B, B300I, BT201B
A4x2, A6x2/2, A6x2/4, A6x2, A6x4 A/B

94 - 164

6x4Z, 8x4Z BT200B, BT200I, B300B, B300I, BT201B

319446

Mudguard bracket

ScR 1732855



Material:

Steel sheet
Thickness: 1,7 mm

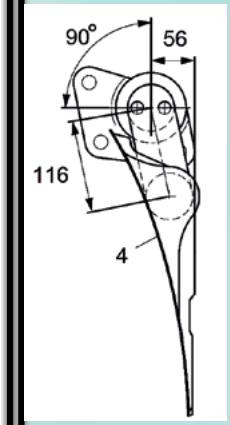



kg 7,45

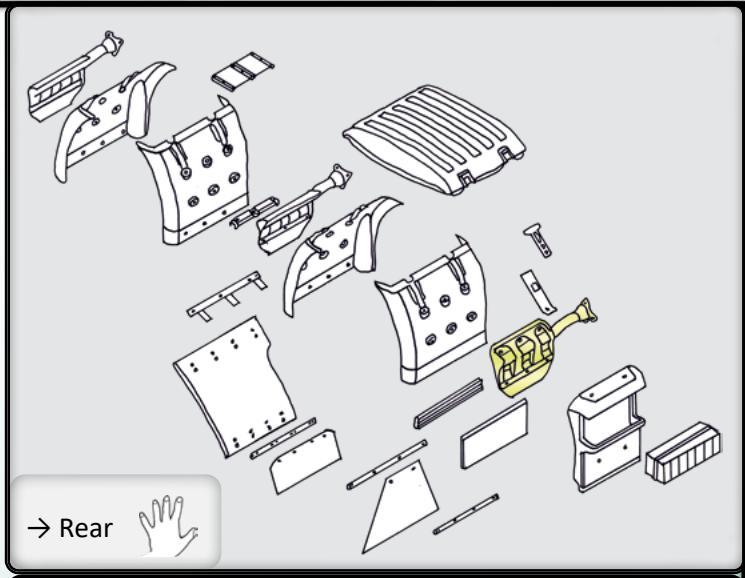

GPR 2004 - 2018

A6x2, B6x2, 6x2*4, 6x4, 8x2, 8x2*6, 8x4

→2051659 →02/2010

A/B 6x2Z, A/B 8x2Z Without rear mudguards

→2093408 →12/2013

6x4Z, 8x4Z Without anti-roll bar
BT200B, BT200I, BT300B, BT300I
Articulated

94 - 164 1994 - 2008

6x4Z, 8x4Z Without anti-roll bar
BT200B, BT200I, BT300B, BT300I
Articulated

Tractor 6x2, 6x2*4, 6x4, 8x2, 8x2*6, 8x4

319447

Mudguard bracket

ScR 1732856



Material:

Steel sheet
Thickness: 1,7 mm

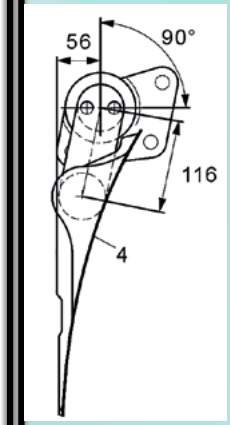



kg 7,45

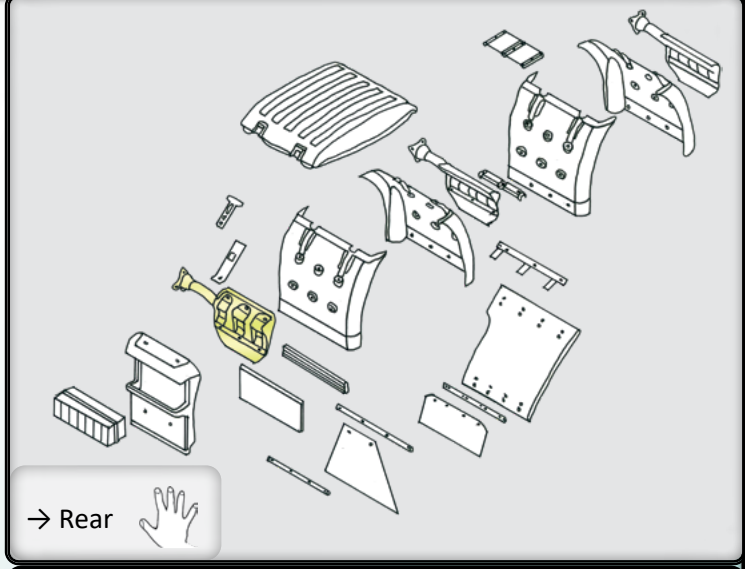

→ Rear

GPR 2004 - 2018

A6x2, B6x2, 6x2*4, 6x4, 8x2, 8x2*6, 8x4

→2051659 →02/2010

A/B 6x2Z, A/B 8x2Z Without rear mudguards

→2093408 →12/2013

6x4Z, 8x4Z Without anti-roll bar
BT200B, BT200I, BT300B, BT300I
Articulated

94 - 164 1994 - 2008

6x4Z, 8x4Z Without anti-roll bar
BT200B, BT200I, BT300B, BT300I
Articulated

Tractor 6x2, 6x2*4, 6x4, 8x2, 8x2*6, 8x4

319454

Mudguard bracket

ScR **1794657**





Material:

Steel sheet
Thickness: 1,7 mm

Tube: Ø 60 mm
Tube wall: 5 mm



kg 7,9

→ 319455



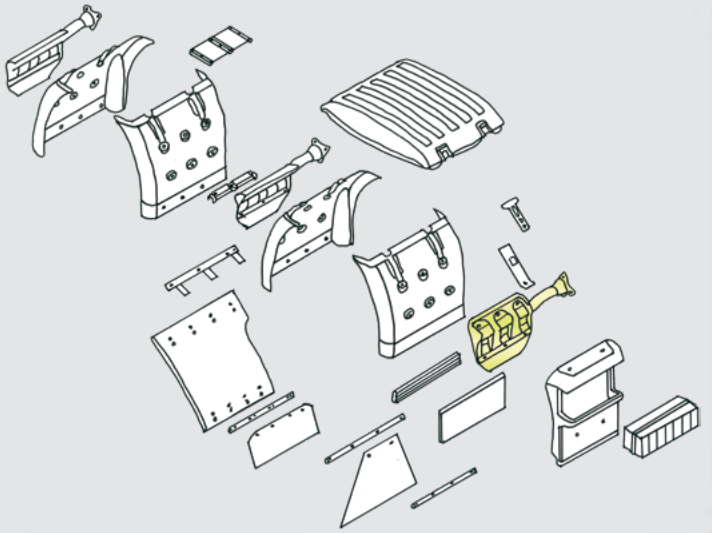

GPR	04/2004 - 2018
94 - 164	06/1995 - 12/2004



6 x 2, 6 x 2*4, 6 x 4
8 x 2, 8 x 2*6, 8 x 4



4 x 2, 4 x 4

319455

Mudguard bracket

ScR **1794658**







Material:

Steel sheet
Thickness: 1,7 mm

Tube: Ø 60 mm
Tube wall: 5 mm

kg 7,9

→ 319454



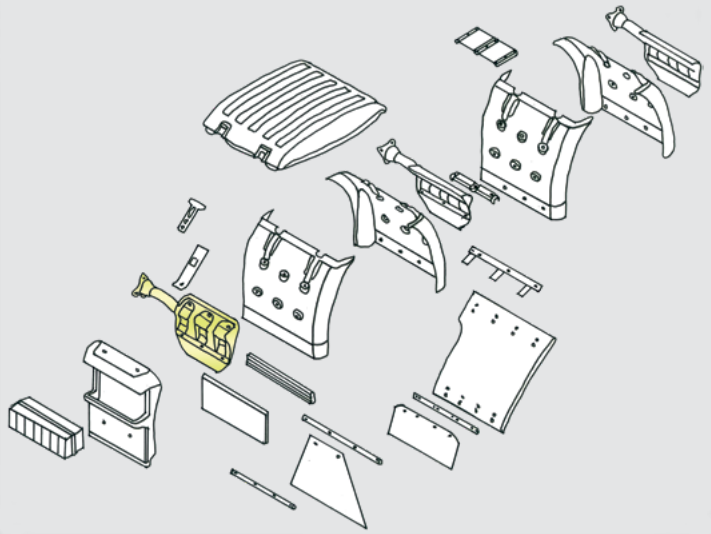

GPR 04/2004 - 2018
94 - 164 06/1995 - 12/2004



6 x 2, 6 x 2*4, 6 x 4
8 x 2, 8 x 2*6, 8 x 4



4 x 2, 4 x 4

319393

Bracket → Mudguard

ScR **1854878**

Material:
Painted steel

Material thickness:
6,5 mm



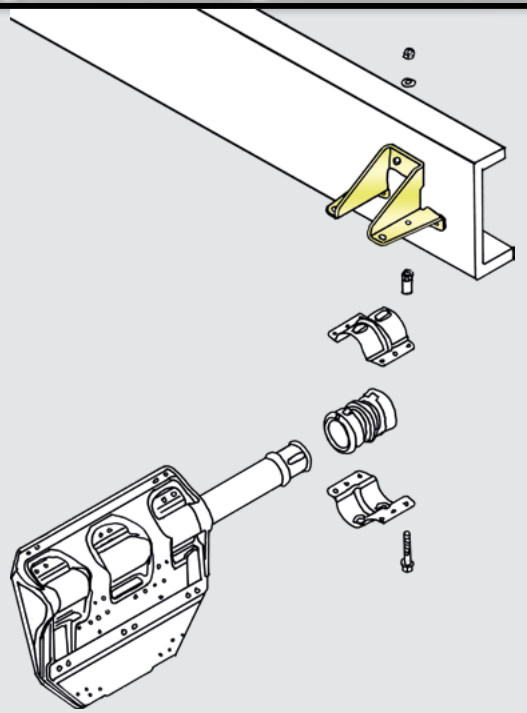

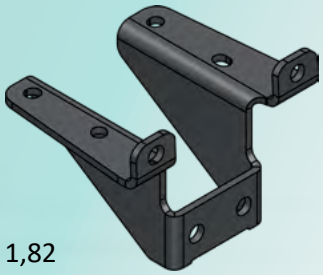

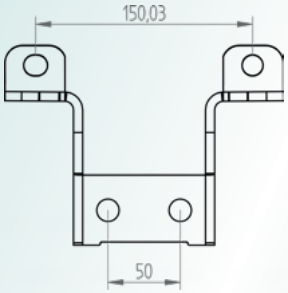

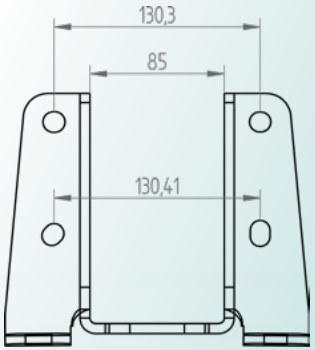

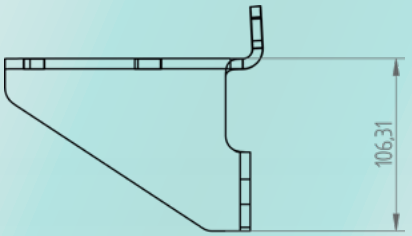

kg 1,82

LPGRS	08/2016 →	
GPR	04/2004 - 2018	Crew cab

319394

Bracket → Mudguard, LEFT

ScR **1854879**



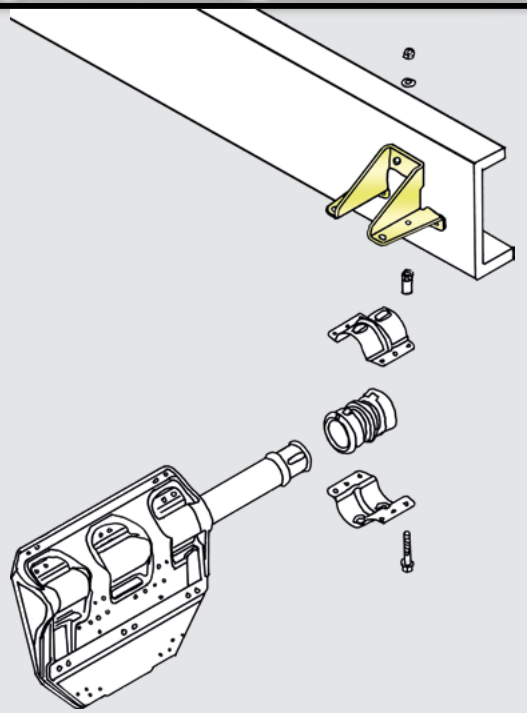

Material:
Painted steel

Material thickness:
6,5 mm

GPR	04/2004 - 2018
94 - 164	06/1995 → 12/2004



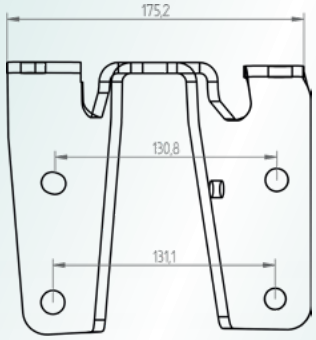

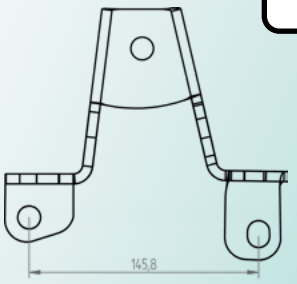

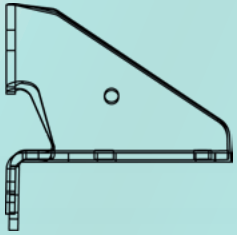

Right → 319395



kg 1,9

319395

Bracket → Mudguard, RIGHT

ScR **1854880**



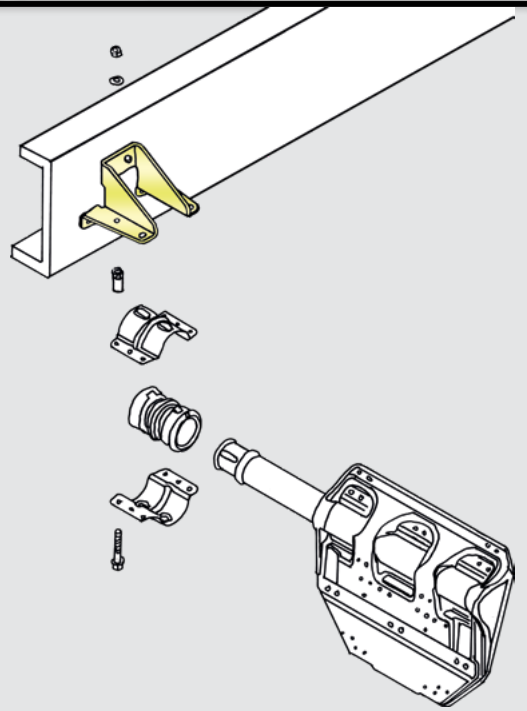

Material:
Painted steel

Material thickness:
6,5 mm

GPR	04/2004 - 2018
94 - 164	06/1995 → 12/2004

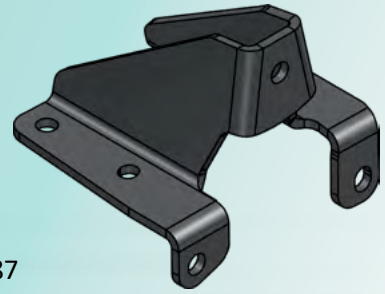

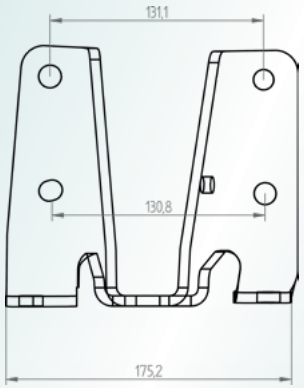

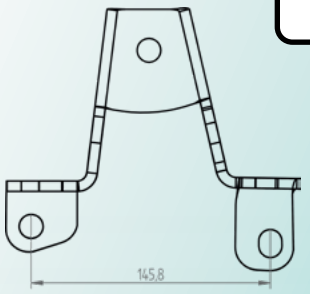

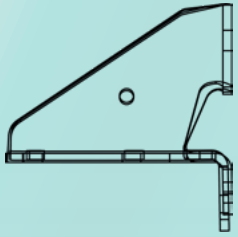

Left → 319394



kg 1,87

319396

Bracket, left
→ Mudguard bracket
→ Leaf suspension

ScR **1874851**

Material:
Steel

Coating:
Black paint

kg 1,81

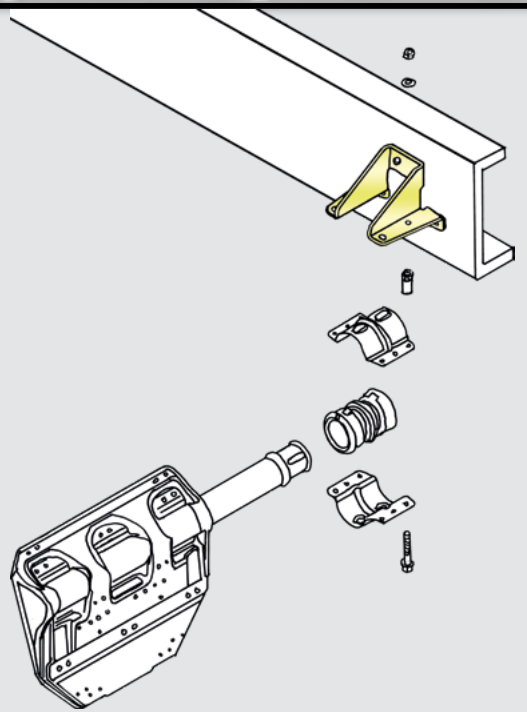

LPGRS	08/2016→	A/B 4x2 Z	A/B 4x4 Z
GPR	2004 - 2018		

→ Mudguard brackets:

319408	2476466, 2054597, 1874853	LH Normal
319434	2800401, 2476495, 2054589	LH High

GPR	2004 - 01/2012	A4x2Z

→2074295 →5287449 →9166760 →3803816

→ Mudguard bracket: **319438** 2054603, 1725671 LH

319397

Bracket, right
→ Mudguard bracket
→ Leaf suspension

ScR 1874852

Material:
Steel

Coating:
Black paint





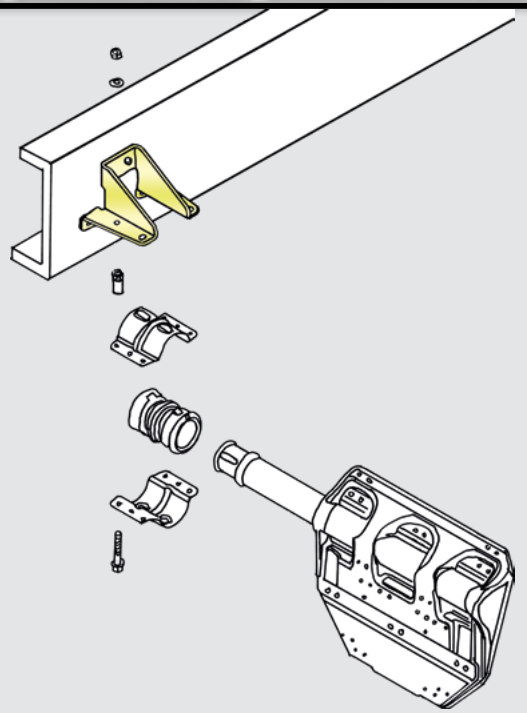

kg 1,81

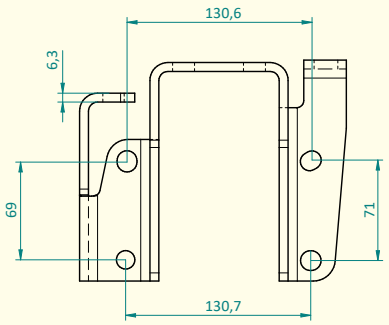

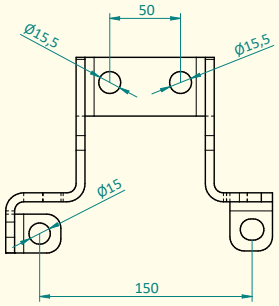

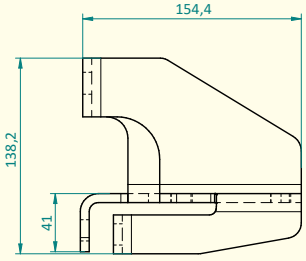

LPGRS	08/2016→	A/B 4x2 Z	A/B 4x4 Z
GPR	2004 - 2018		

→ Mudguard brackets:

319409	2476465, 2054598, 1874854	RH Normal
319435	2800402, 2476494, 2054590	RH High

319388

Vibration damper

ScR **1781031**



Material: Rubber

kg 0,35

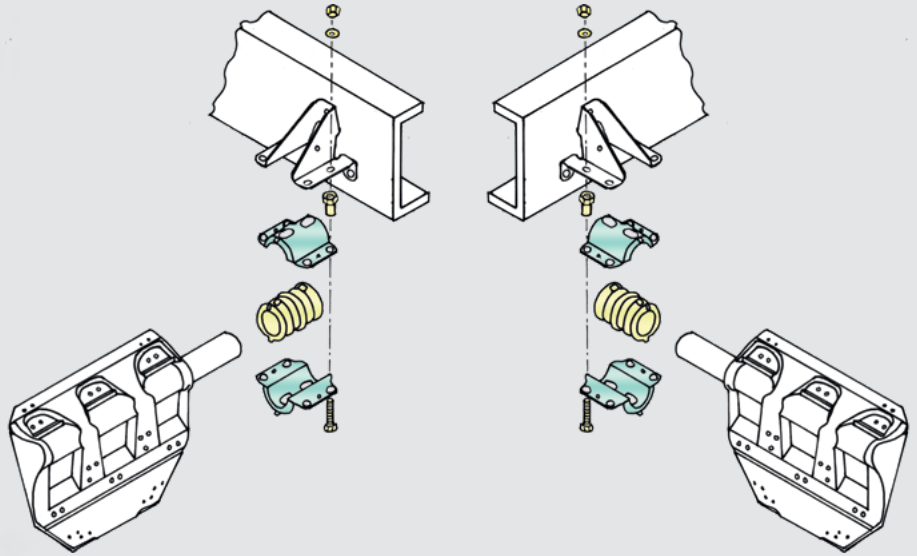

319392

Clamp pair

ScR **1927800** x 2

Material: Steel



kg 1,24

LPGRS 08/2016→
GPR 04/2004 - 2018
94 - 164 06/1995 - 12/2004

319389

Installation kit

ScR

1857875 x 4
1858459 x 4
807311 x 4
815148 x 4



kg 0,45

319380

Special plate

ScR **1358339**

90,1 x 83,4 mm

Thickness: 7 mm
Holes: Ø 17,3 mm

Material: Steel



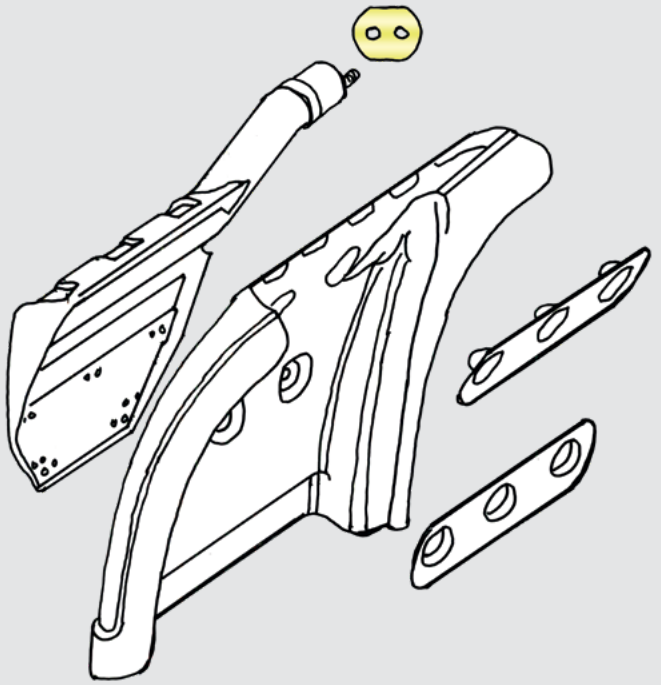

GPR	04/2004 - 2018
94 - 164	06/1995 - 12/2004

kg 0,3

319284

Bracket → Trailer parking socket behind cab

ScR 1736658

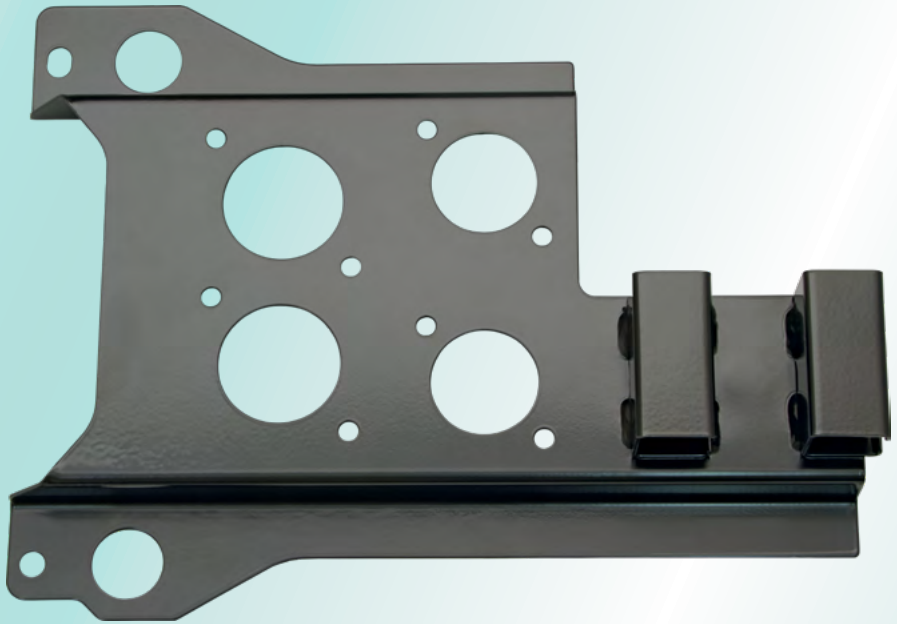

Material: Steel

Coating: Black paint

kg 1,58



GPR 2004 - 09/2013

→2090504 →5332800 →9179156 →3846666

94 - 164 1994 - 2008

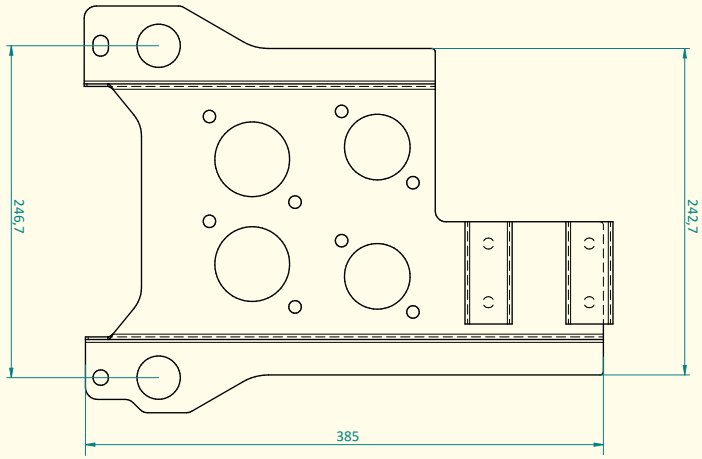

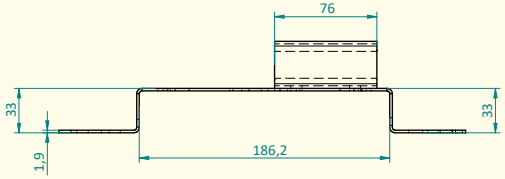



PRODUCT CATALOGUE 2020

World wide wholesaler of spare parts for trucks and buses

Est. 1976

PARTS FOR:

VOLVO



HD - PARTS

HEAVY DUTY

HD - PARTS

FINLAND

101003

Sensor → engine speed monitor

Clearance product !

VoR

21426987
20513343



Material: Plastic

O-ring 17,17 x 1,78 mm
VoR 20966752

kg 0,04

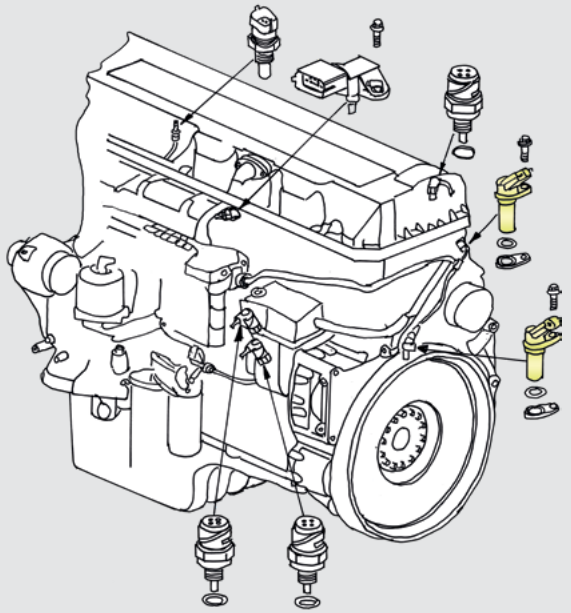

FH (4)	13, 16	09/2012→
FH	13, 16	09/2005 - 09/2012
FH 16	16	09/2003 - 09/2005
FM (4)	11, 13	09/2012→
FM	11, 13	09/2005 - 09/2012
FL + (3)	5, 8	
FE + (3)	8	

B5LH + (3), B6R, B7R, B8R + (3), B9L
B11R, B12M, B13R

101008

Sensor → coolant temperature



VoR

21531072
20513340

Clearance product !

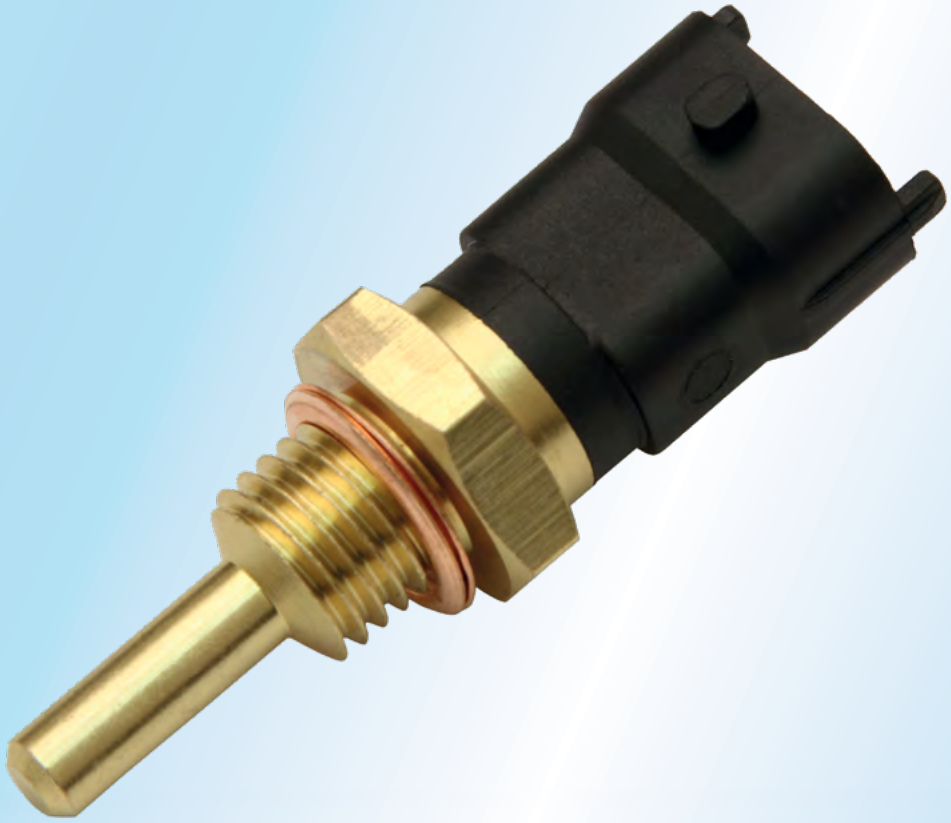

Material:
Brass
Plastic

kg 0,03

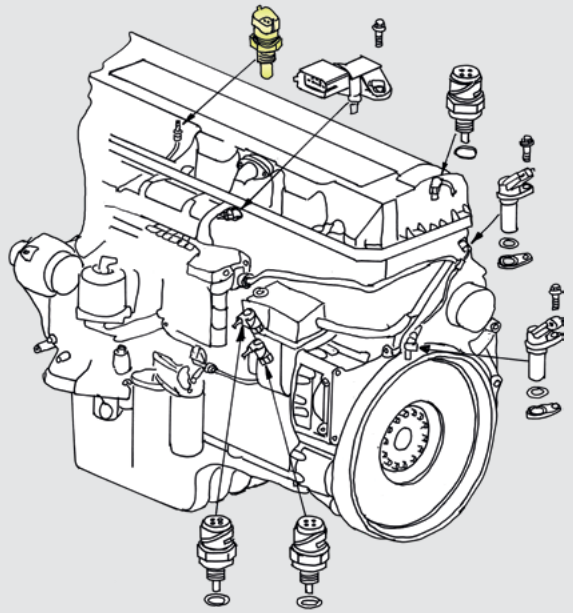

FH (4)	*	13, 16	09/2012→
FH		13, 16	09/2005 - 09/2012
FH 16		16	09/2003 - 09/2005
FM (4)	*	11, 13	09/2012→
FM		11, 13	09/2005 - 09/2012
FL + (3)		5, 8	
FE + (3)		8	

* Sensor is located on the front of the engine.

B5 + (3), B6R, B7R, B8R (3), B9L
B11R + (3), B13R

101012

Sensor → high pressure

VoR

20803650
20514065
20483889



Material:
Brass
Plastic

Suit for:

- Air brake modulator
- Air tanks
- Air brake safety valves
- Level control valve
- Lift control tag axle
- Air spring
- Bogie lift

- Control and warning systems
  - Temperature
  - Liquid level
  - Speed

FH (4)	13, 16	09/2012→
FH	13, 16	09/2005 - 09/2012
FH 12/16	12, 16	01/2002 - 09/2005
FM (4)	11, 13	09/2012→
FM	9, 11, 13	09/2005 - 09/2012
FM 9/12	9, 12	01/2002 - 09/2005
FE (3)		
FL +(3)		

B5, B6, B7, B8, B9, B11, B12, B13

Suitable bayonet connector:
HD 317032



DIN 72585-A1

kg 0,08

101013

Sensor → Oil & fuel pressure

With advanced ceramic chip



VoR

85139619
21634024
21540602
20886108
20484678
20428456
20375013

Material:
Brass
Plastic



O-ring 13,4 x 2,1 mm
VoR 968559

kg 0,06

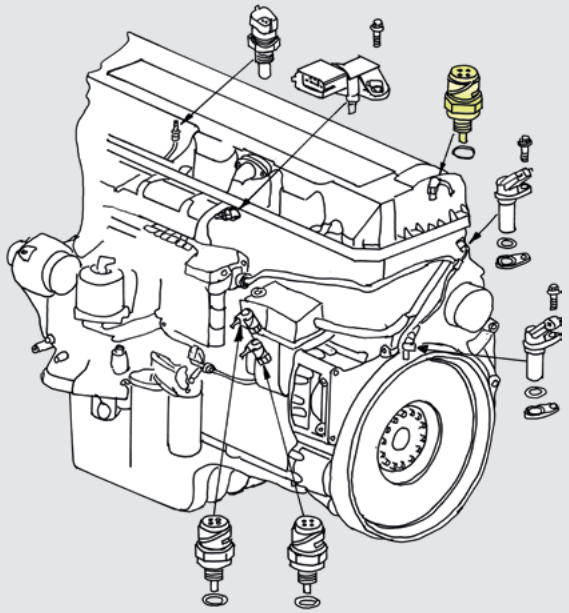

FH (4)	13, 16	09/2012→
FH	13, 16	09/2005 - 09/2012
FH 12/16	12, 16	01/2002 - 09/2005
FM (4)	13	09/2012→
FM	9, 11, 13	09/2005 - 09/2012
FM 9/12	9, 12	01/2002 - 09/2005
FL + (3)		
FE		

B5 + (3), B6, B7, B9, B12, B13

Suitable bayonet connector:
HD 317032



DIN 72585-A1

101016

Sensor → crankcase pressure

VoR

21634017
21746206
20796744
20905373
20499340
20484676
20452439
20409436

O-ring 13,4 x 2,1 mm
VoR 968559

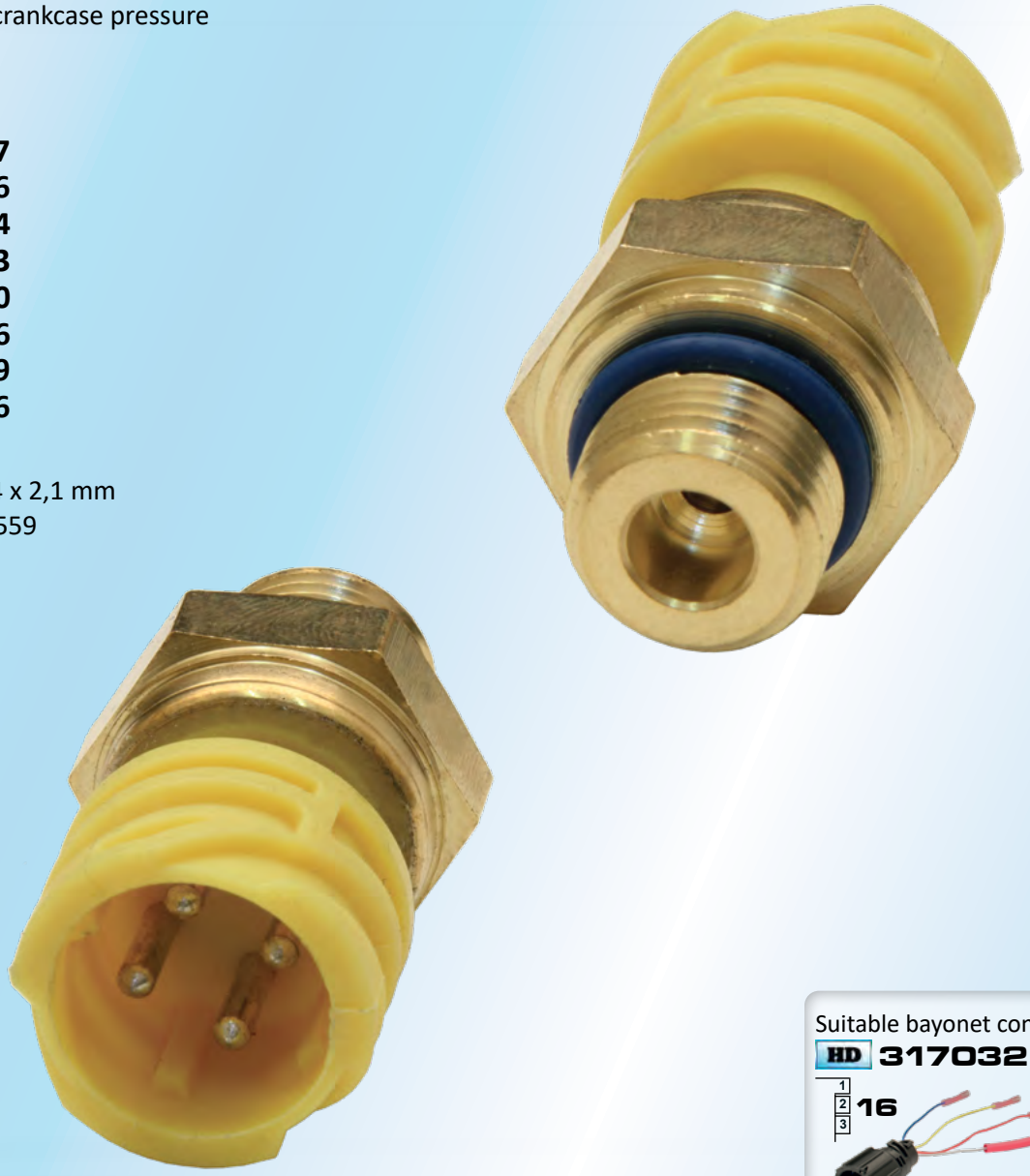

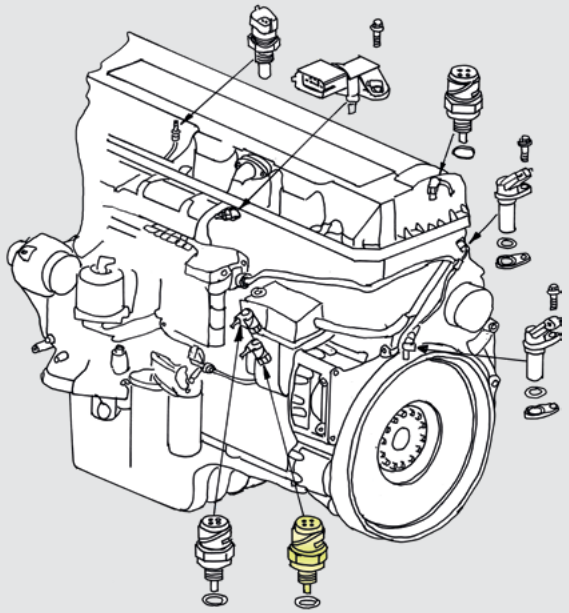

FH (4)	13, 16	09/2012→
FH	13, 16	09/2005 - 09/2012
FM (4)	11, 13	09/2012→
FM	11, 13	09/2005 - 09/2012

B6R, B7R, B9 L/S/R/TL
B11R, B12 B/M/R, B13R

Suitable bayonet connector:
HD **317032**



DIN 72585-A1

kg 0,07

101019

Sensor → boost pressure and temperature

VoR **20524936**



kg 0,03

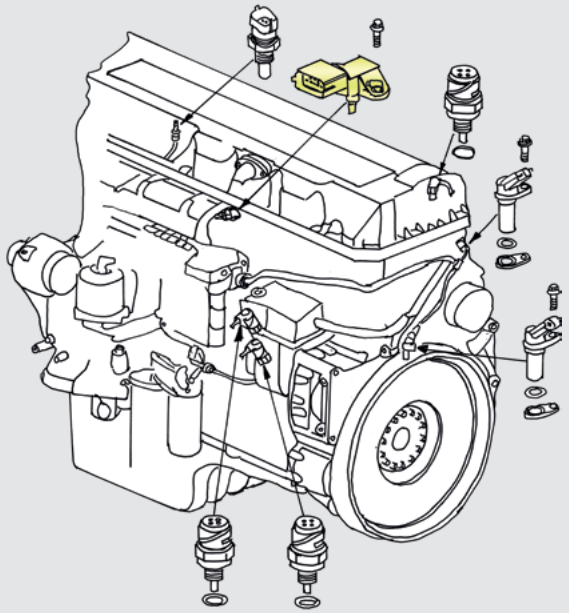

FH	13, 16	09/2005 - 09/2012
FH 12/16	12, 16	09/2003 - 09/2005
FM	9, 11, 13	09/2005 - 09/2012
FM 9/12	9, 12	09/2003 - 09/2005
FE		
FL		

B6R, B7R, B11R, B13R, B5LH, B9

101022

Pressure sensor

With advanced ceramic chip

VoR

20829689
20528336
20428459
8158821





kg 0,08

M16 x 1,5 mm

Suitable bayonet connector:
HD 317032



DIN 72585-A1

FH	13, 16	09/2005 - 09/2012
FH 12/16	12, 16	09/2003 - 09/2005
FM	9, 13	09/2005 - 09/2012
FM 9/12	9, 12	09/2003 - 09/2005

Suit also for older Volvo models

B7R
B9 L/S/R/TL
B12 B/M

Suit for many different locations

101025

Low pressure sensor

VoR

20424051
3963471





kg 0,10

M16 x 1,5 mm

Suitable bayonet connector:
HD 317032



DIN 72585-A1

FH	13, 16	09/2005 - 09/2012
FH 12/16	12, 16	09/2003 - 09/2005
FM	9, 13	09/2005 - 09/2012
FM 9/12	9, 12	09/2003 - 09/2005

Sensor for stop brake / park brake

101206

Oil cooler

VoR 20700516

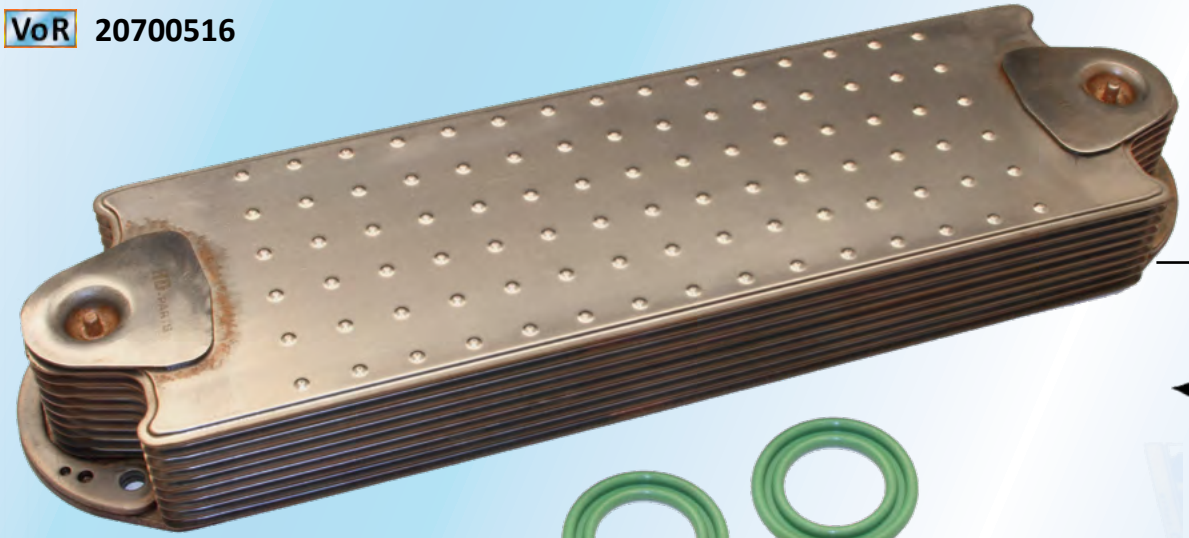

9 layers

VoR 20551483
1677516

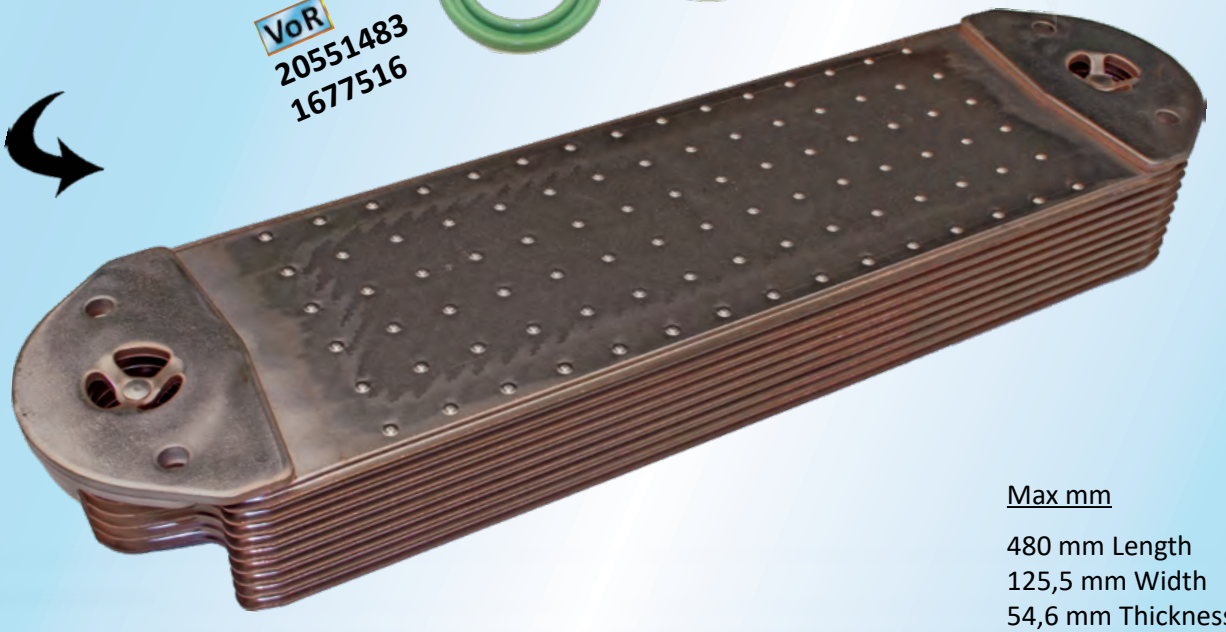

kg 5,4

Max mm

480 mm Length
125,5 mm Width
54,6 mm Thickness

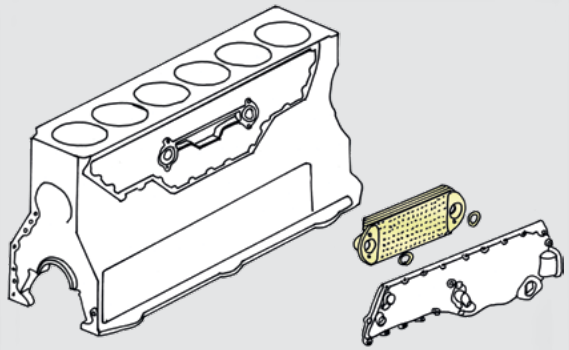

16

FH (4)	09/2012→
FH	09/2005 - 09/2012
FH 16	01/2002 - 09/2005

101203

Oil cooler

VoR 20505537

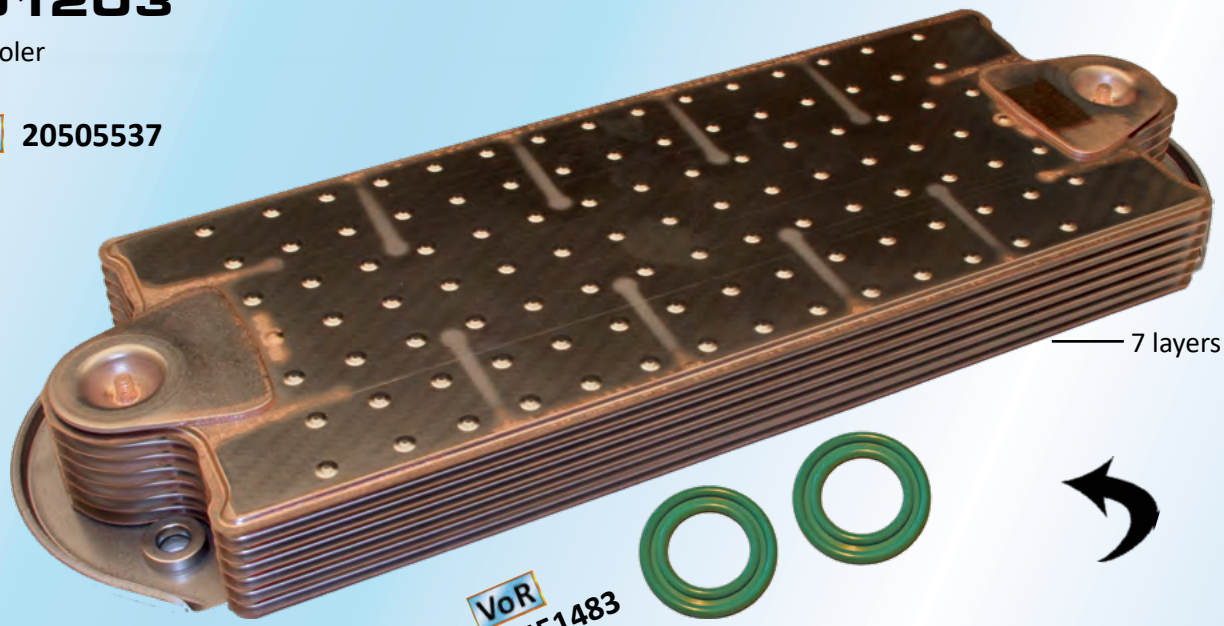

VoR 20551483
1677516

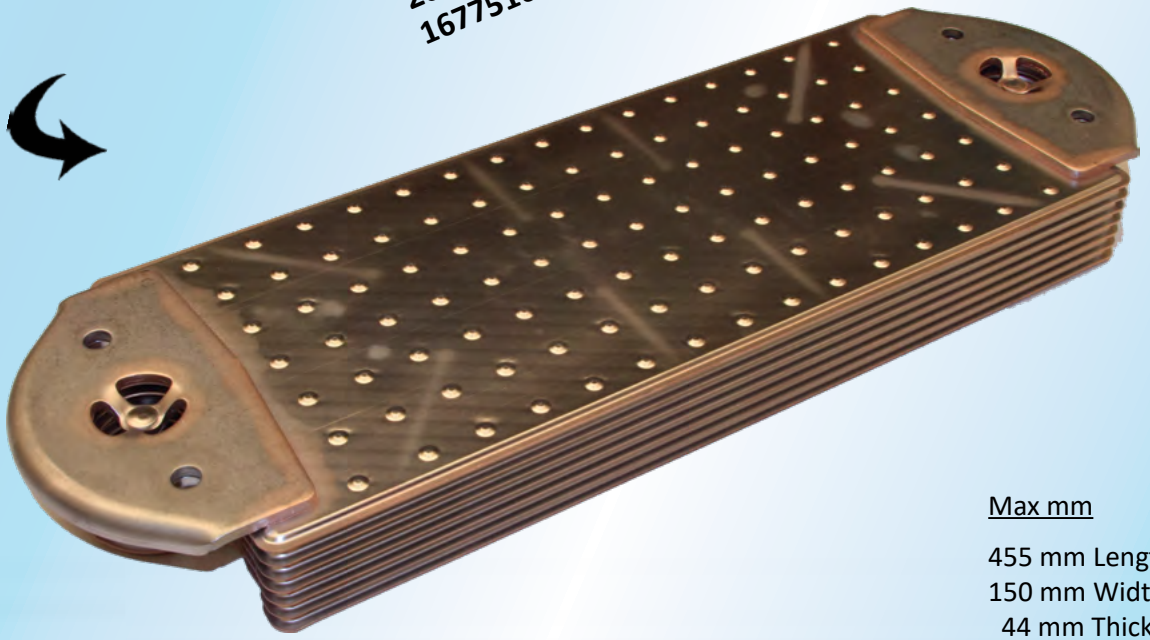

kg 5,25

Max mm

455 mm Length
150 mm Width
44 mm Thickness

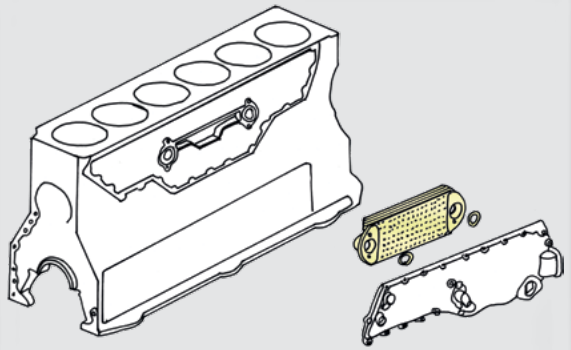

13

FH (4)	EUR 6	09/2012→
FH	EUR 5	09/2005 - 09/2012
FM (4)	EUR 6	09/2012→
FM	EUR 5	09/2005 - 09/2012

13

B13R EUR 6 2009 - 2015 EU

In Mexico still available

EGR Exhaust gas recirculation

EGR Рециркуляция выхлопных газов

EGR → VoR 20742946

101101

Sensor → oil level / oil temperature

VoR

22807993
22022794
21521353
21042447
24424110
20506546
3173797



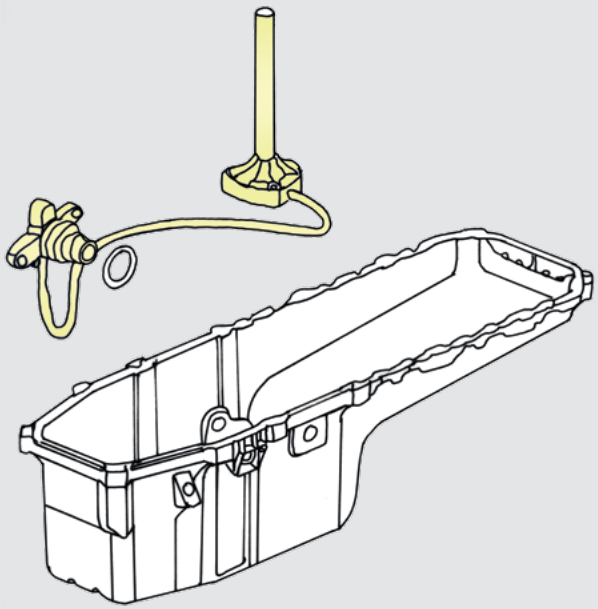

FH	12, 16	09/2005 - 09/2012
FH 12/16	12, 16	09/2003 - 09/2005
FL 6	6	
FM	9, 13	09/2005 - 09/2012
FM 9/12	9, 12	09/2003 - 09/2005

B8R +(3)	8	2013 → Euro 6
B11R +(3)	11	2011→Euro 5, 2013→Euro 6
B9L/R/S/TL	9	2002 - 2012
B12B/M	12	1991-2001 sw, 1997-2011 br

Material:
Black plastic
Черный пластик

kg 0,23

102190

Thermostat

VoR

21412639
21237213
20560249
20463750
21412646

FH (4)	D13, D16	09/2012→
FH	D13, D16	09/2005 - 09/2012
FM (4)	D11, D13	09/2012→
FM	D9, D11, D13	09/2005 - 09/2012

B9, B12, B11R, B13R, B11R (3)

82 +/-2 °C

Materials:
- Stainless steel
- Copper
- Wax
- Rubber



Full open temp: 95°C +/- 2°C

Full open stroke: 20 mm
Max. Ø: 107 mm +/- 0,5 mm



Includes NBR seal
-40 °C → +110°C

VoR

21503575
1549651

kg 0,39

102182

Thermostat

VoR

8149182
1676306
1544683



82 °c

Material:
Stainless steel
Brass
Rubber PTFE (Teflon) Ø 73 mm →
-196°C - +250°C

Full open temp: 94°C +/- 2°C

Full open stroke: 9 mm
Cylinder Ø: 58 mm +/- 0,4 mm

kg 0,2

102180 VoR 1544710

Seal

Material:
Stainless steel
Teflon -80°C - +200°C



kg 0,018

FH, FM FH 12 I	D12F EGR	2004 - 2006

102206

Expansion tank

VoR

1676400
1676576







kg 2,66

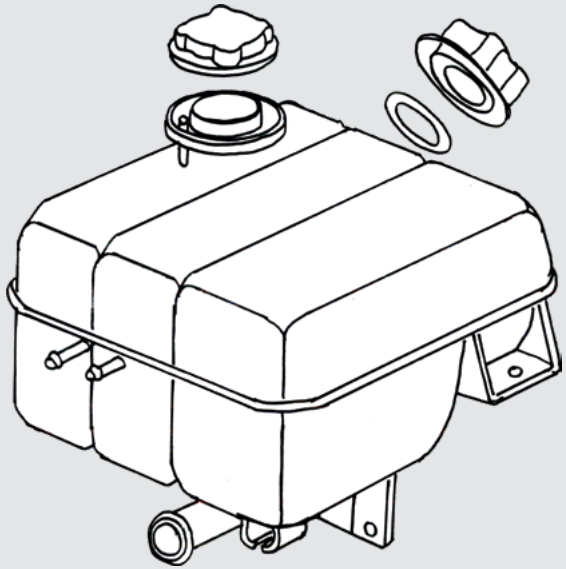

FH	12, 16	09/2005 - 09/2012
FH 12/16	12, 16	1993 - 09/2005

FM

B5LH, B7 L/R, B9 R/TL,
B11R, B12 B/M/R, B13R

102210

Expansion tank

VoR

22821826
22430043
21883433
21360161

Material: Plastic





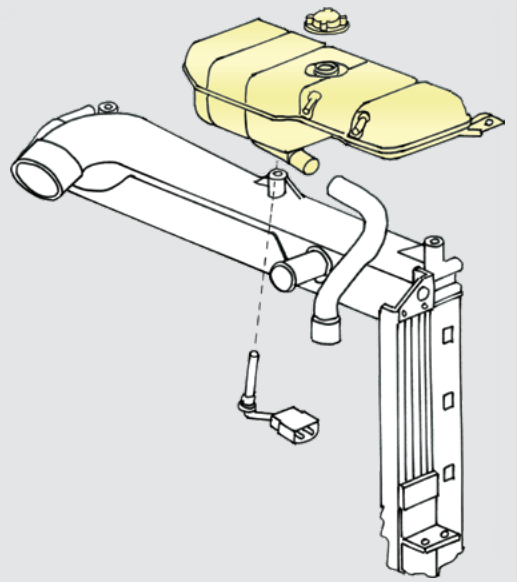

FH	12, 13		09/2005→
FH II (4)	13		01/2012→
FH	16		01/2003→
FH II (4)	16		05/2012→

B11	11		
B8R (3)	8	EUR 6	2013→
B11R (3)	11	EUR 6	2013→
B5LH (3)			2013→
B5LHC (3)			2013→
B5TL (3)			2014→

Expansion tank includes:

VoR

21884469 Filler cap
21360115 Pressure cap
21271982 Sensors

kg 3,62

102211

Expansion tank

VoR

22821828
22430366
21493205

Material: Plastic





kg 3,75

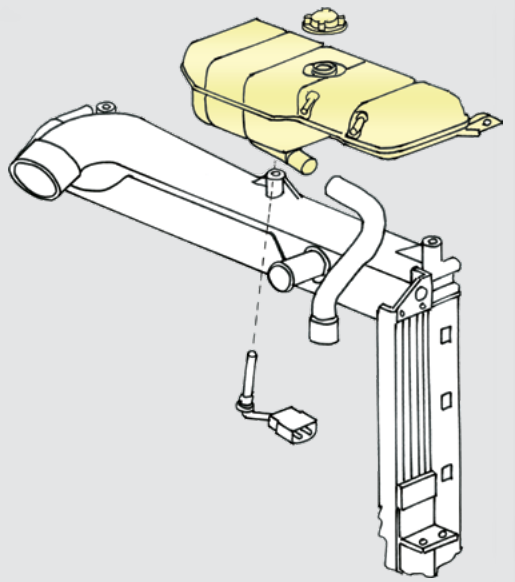

FM (4)	11, 13	05/2012→

Expansion tank includes:

VoR

21884469 Filler cap
21360115 Pressure cap
21271982 Sensors

102300

Hose → air cooler

Dimensions:
Length: 400 mm
Outer Ø 105
Inner Ø 81

Temperature:
-55°C → +180°C

Material: Silicone

VoR

21312237
20589123
20574218
8149800
1665556

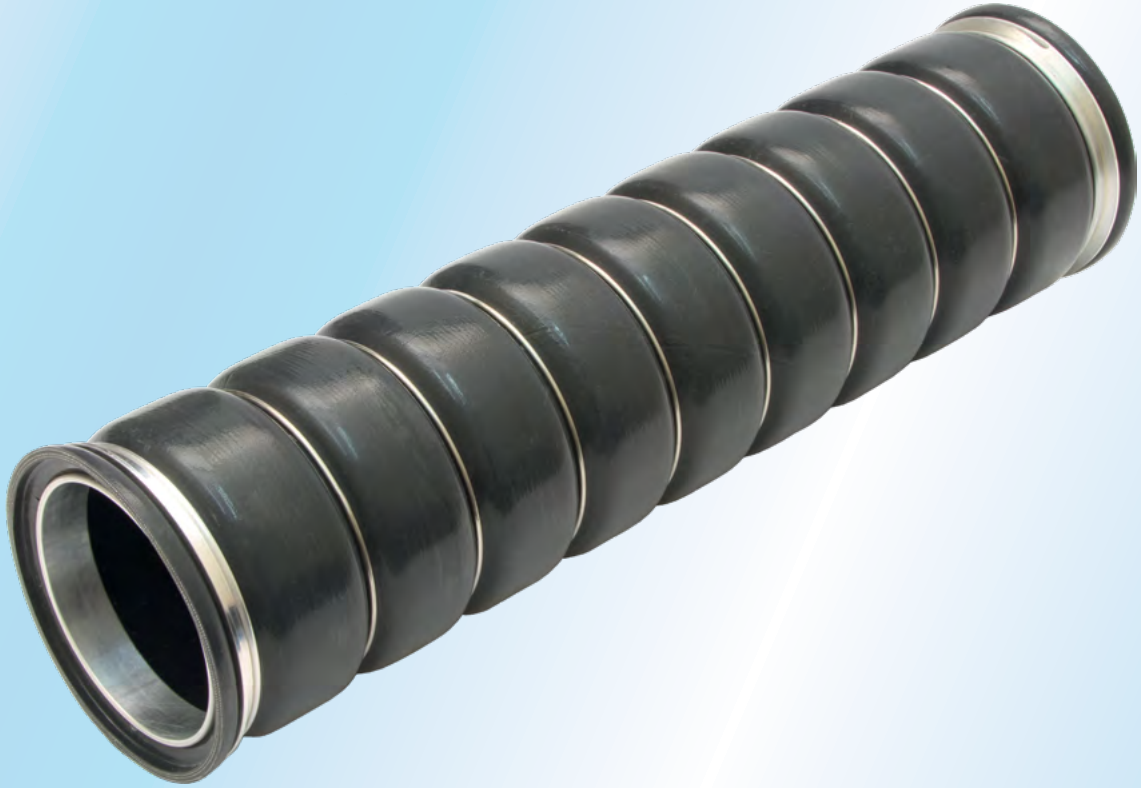

kg 0,63

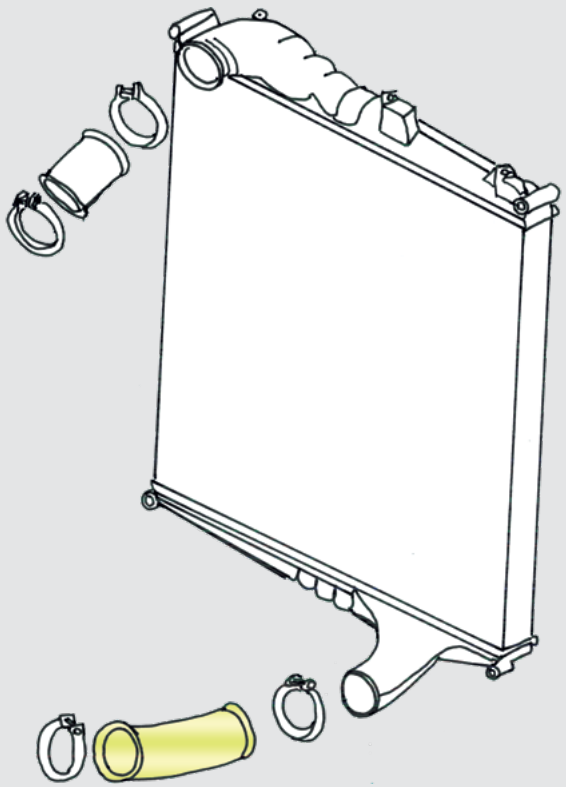

FH (4)	13, 16	09/2012→
FH	13, 16	09/2005 - 09/2012
FM (4)	11, 13	09/2012→
FM	9, 11, 13	09/2005 - 09/2012

B9 L/R/S/TL	9	2002 - 2014

102301

Hose (upper) → Air cooler

VoR **21259899**



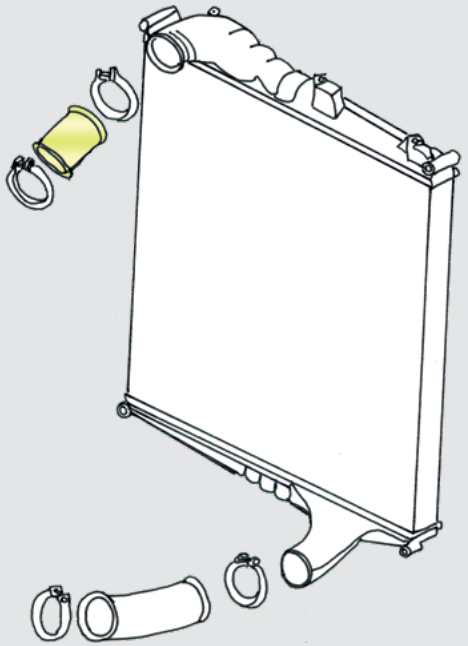

Dimensions:

Inside Ø 81 mm
Outside Ø 106 mm
Length: 225 mm
Thickness: 3,5 mm

Materials:

- Silicone rubber
- Aluminium
- Steel

kg 0,52

FH (4)	13, 16	09/2012 - 2015
FM (4)	11, 13	09/2012 - 2015
Euro 5		01/2011 - 2015

102303

Hose (upper) → Air cooler

VoR **21768608**



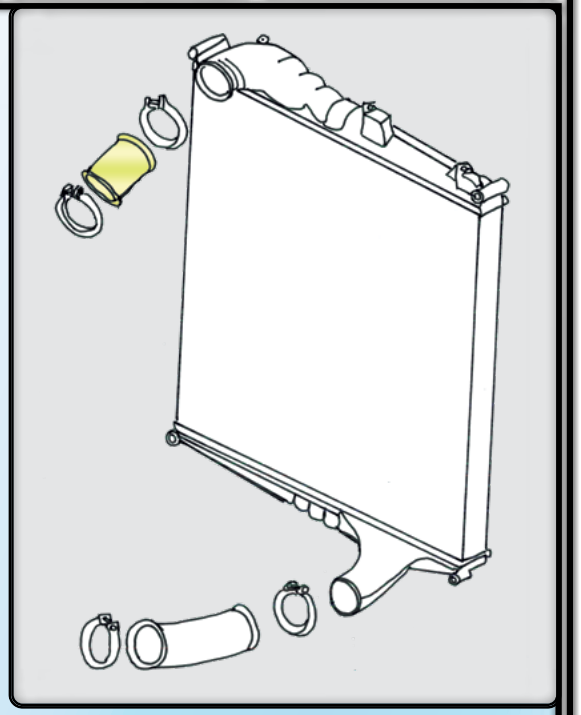

Dimensions:

Inside Ø 81 mm
Outside Ø 106 mm
Length: 168 mm
Thickness: 3,2 mm

Materials:

- Silicone rubber
- Aluminium
- Steel

FH (4)	13	09/2015 →
FM (4)	11, 13	09/2015 →
Euro 6		09/2015 →

kg 0,41

102305

Hose (upper) → Air cooler

VoR **21932464**



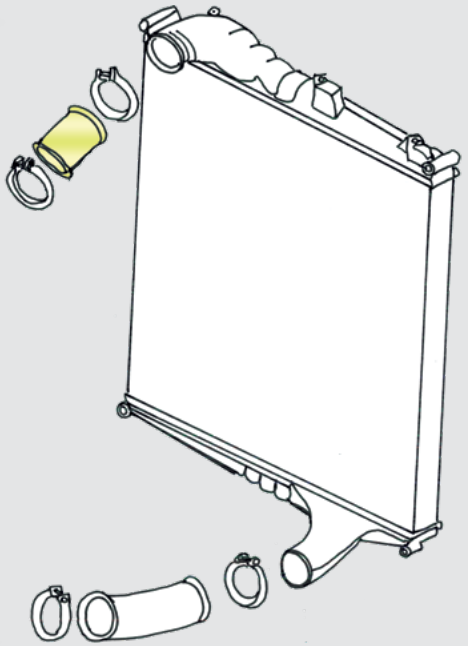

Dimensions:

Inside Ø 81 mm
Outside Ø 106 mm
Length: 167 mm
Thickness: 3,1 mm

Materials:

- Silicone rubber
- Aluminium
- Steel

FH (4)	16	09/2015 →
Euro 6		09/2015 →

kg 0,42

102407

Idler roller, adjustable

VoR **22089601**

Material: Steel



← 10 x rifling

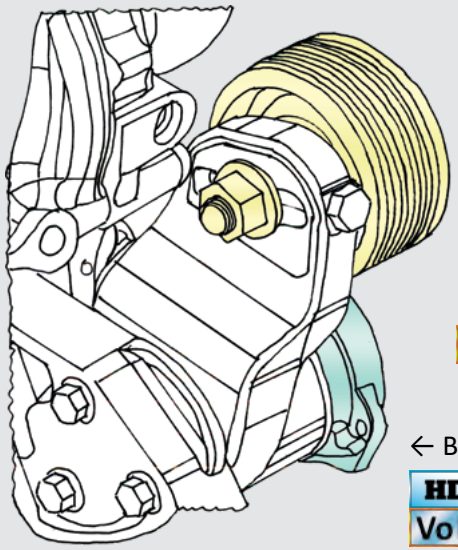

← Bracket
VoR **22081599**

← Belt tensioner
HD **102434**
VoR **21983655**

FH (4) | 16 | 09/2012 →

Euro 5/6

kg 1,33

102408

Idler pulley

VoR 21454549

Renault R 7421454549

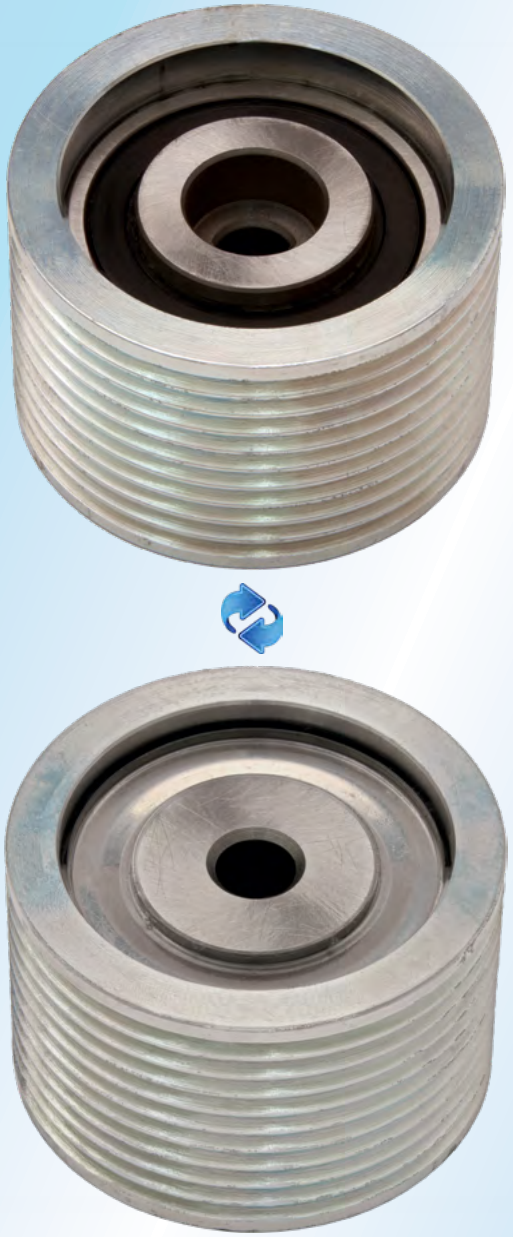

Ø 64 mm x 40 mm

10 grooves

Material: Steel

Non-std brg

kg 0,68

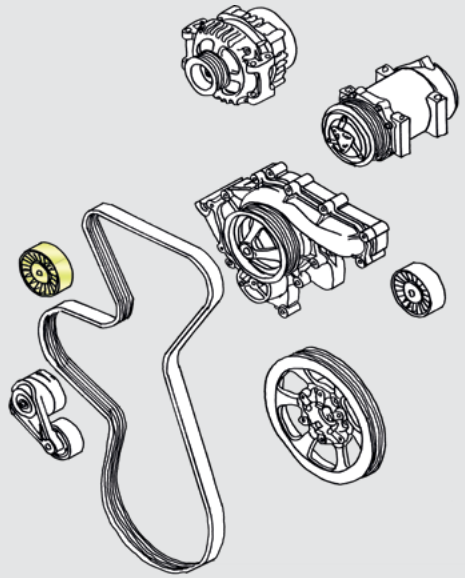



Alternator

FH (4)	13	09/2012→
FM (4)	11	09/2012→

102409

Idler pulley

VoR **21891328**

Ø 94 mm x 40 mm

10 grooves

Material: Steel

Non-std brg

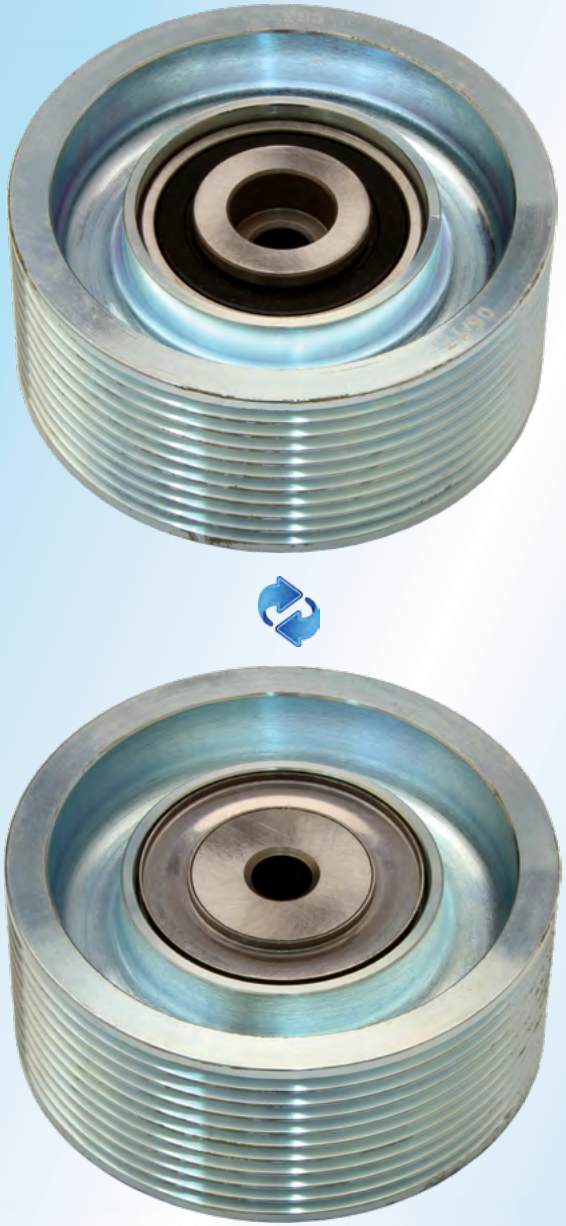

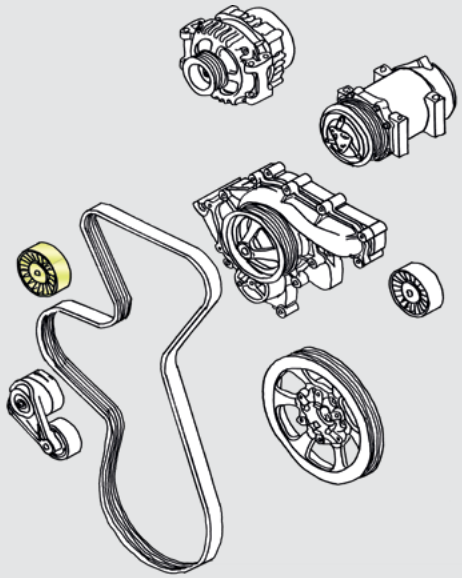



Fan

FH (4)	13	09/2012→
FM (4)	11	09/2012→

kg 1,12

102414

Roller with support



Ø 73 x 38,4 mm

VoR

21766717
21393207
21153968
20521447

Materials:
Support: Aluminum
Roller: Steel

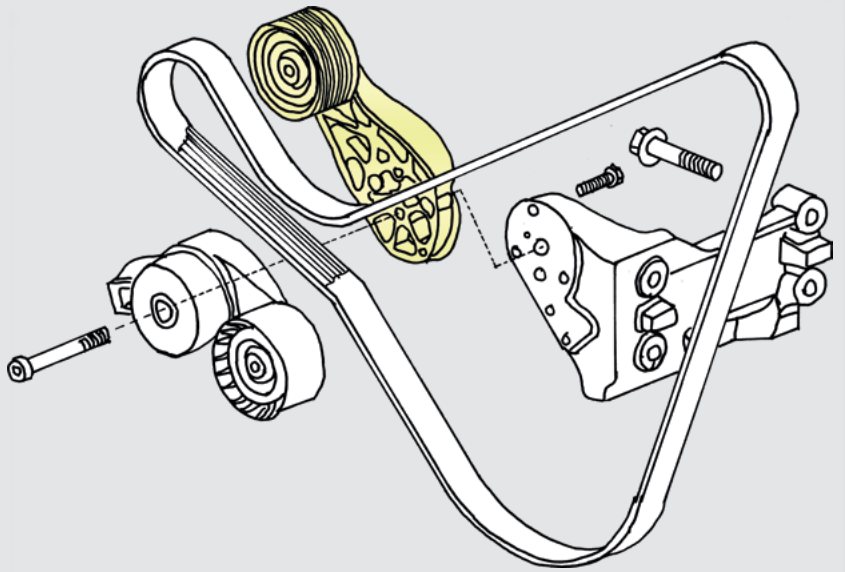

Fan
Вентилятор

Koyo



kg 1,18

	13	
FH (4)	09/2012→	
FH	09/2005 - 09/2012	
FM (4)	09/2012→	
FM	09/2005 - 09/2012	
	13	
B 13 R	2009-2015	

102420

Idler roller

VoR **8086970**

Material: Plastic

Ø 75 mm

Koyo



kg 0,25

Other side is identical

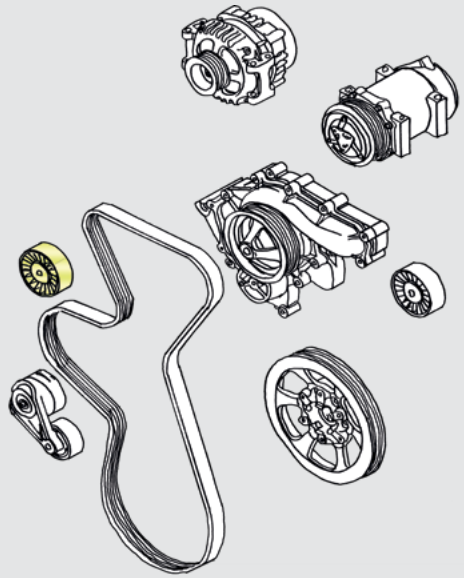

321 Alternator	FM FM 9	9, 11 9	09/2005 - 09/2012 09/2003 - 09/2005
263 Fan / Drive	FM (4) FM FM 9	11 9, 11 9	09/2012→ 09/2005 - 09/2012 09/2003 - 09/2005
321 Alternator	B 9 R	9	2003 - 2013

102424

Idler roller

VoR

21753149
21574656
20747516
3827501

Material: Steel

Ø 74 mm



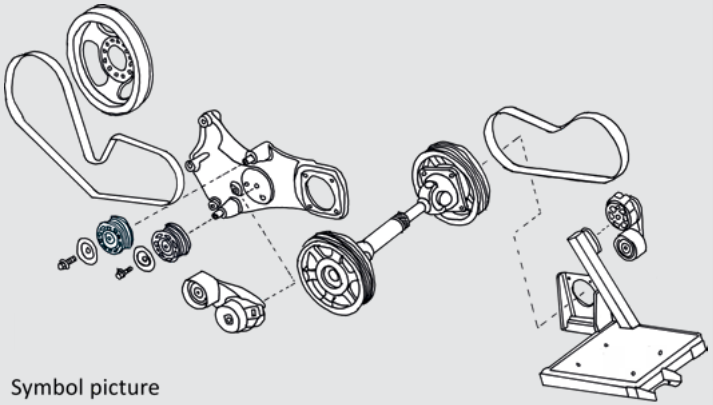

Symbol picture

321 Alternator	FM	9, 11	09/2005 - 09/2012
	FM 9	9	09/2003 - 09/2005
263 Fan / Drive	FH (4)	16	09/2012→
	FH	16	09/2005 - 09/2012
	FH 16	16	09/2003 - 09/2005
321 Alternator	B11R (3), B5TL (3)		2013→

kg 0,78

102430

Belt tensioner

Ø 70 mm x 34 mm



VoR 21983651

Materials:
Body: Aluminium
Roller: Steel



kg 1,28

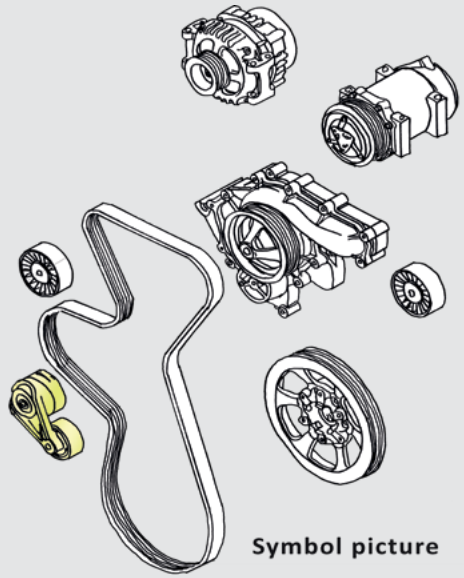

Symbol picture

Alternator	FH (4)	13, 16	09/2012→
	FM (4)	11, 13	09/2012→
Fan	B11R (3)	11	2013→

102432

Belt tensioner

VoR

21257889
3979980

Materials:
Aluminium
Plastic

Koyo

Ø 74 mm



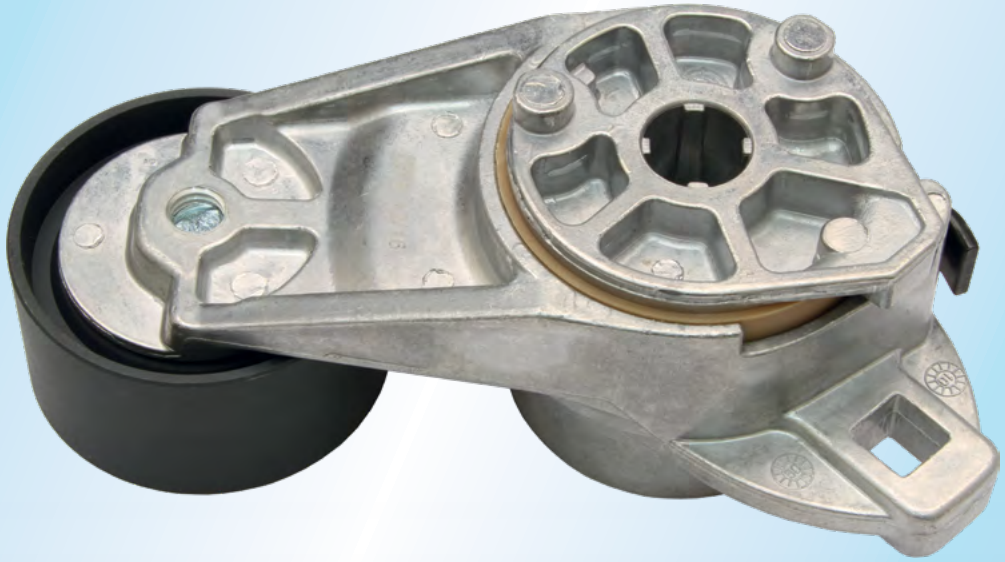

kg 1,72

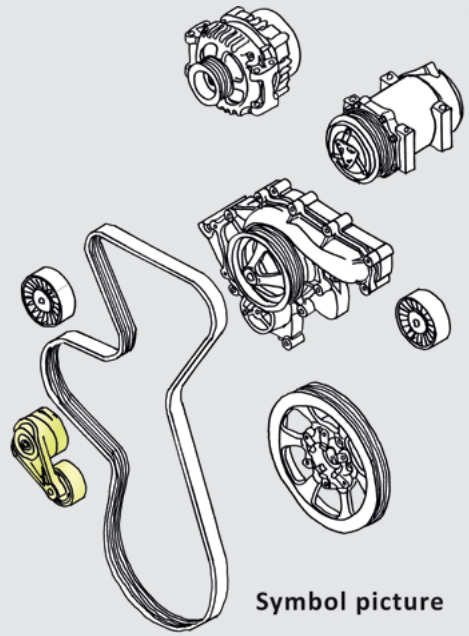

Fan

FH	12	09/2005 - 2006
FH12	12	1998 - 09/2005
FM	12	09/2005 - 2006
FM12	12	1998 - 09/2005

A/C compressor

B7R R7/LE	2001 - 2013	
B9 L/TL	2002 - 2013/4	
B13R	2009 - 2015	Euro 5

102433

Belt tensioner

VoR

21479276
21260406
20487079

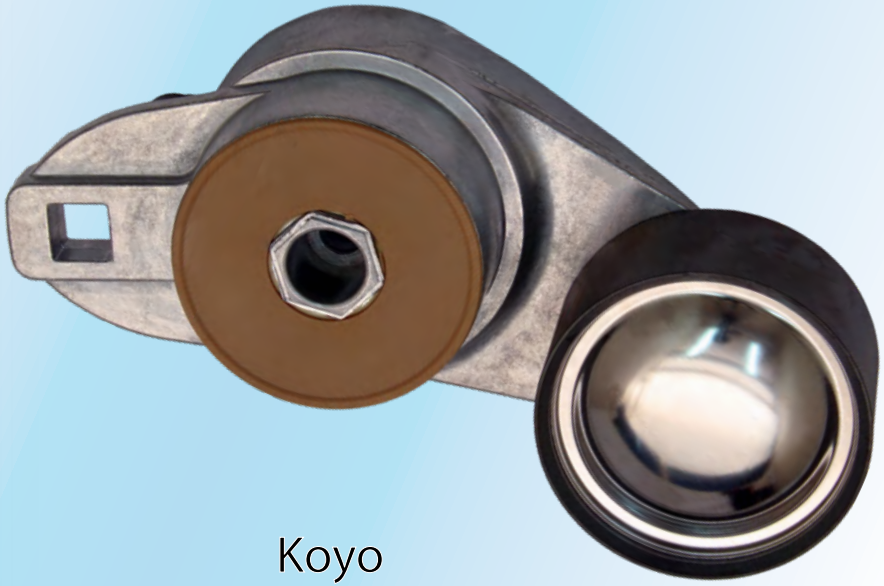

Ø 74 mm

Koyo

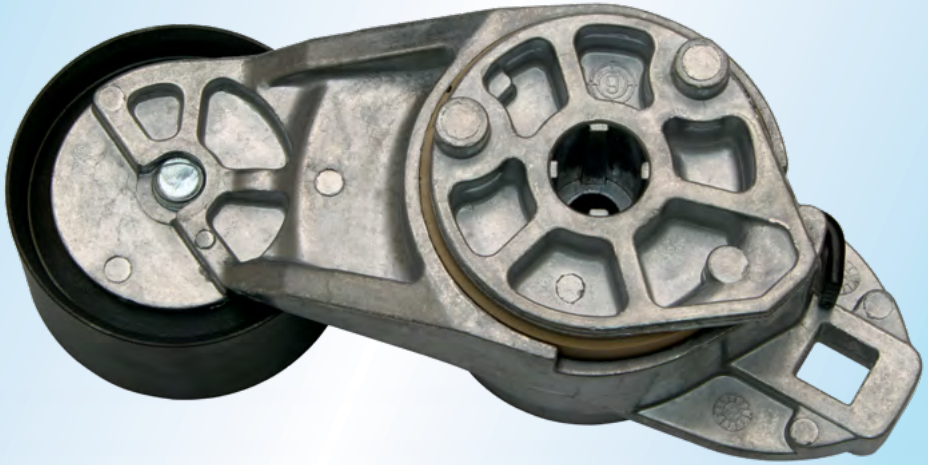

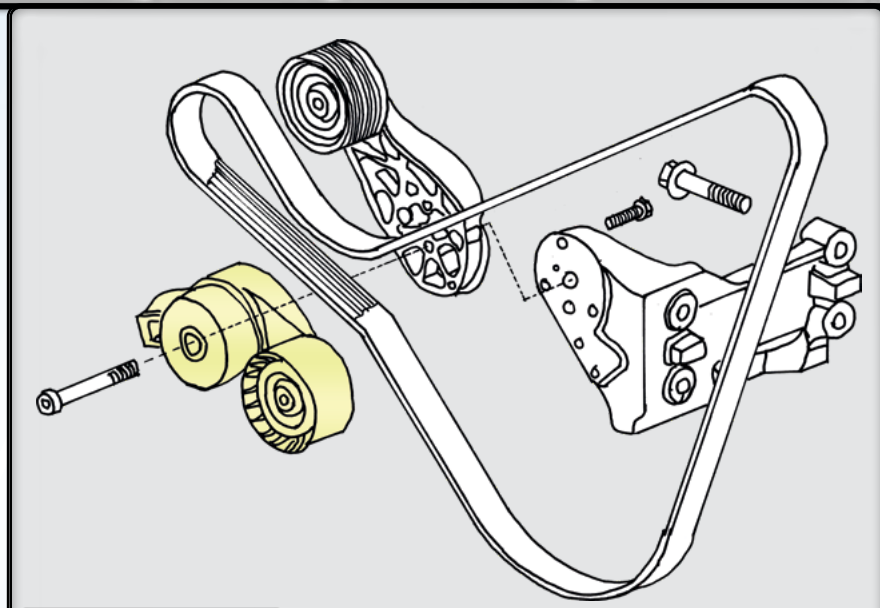

Fan
Вентилятор

Materials:
Support: Aluminum
Roller: Steel

kg 1,7

	13	
FH (4)	09/2012→	
FH	09/2005 - 09/2012	
FM (4)	09/2012→	
FM	09/2005 - 09/2012	

	13	
B 13 R	2009 - 2015	Euro 5

102434

Belt tensioner

Ø 70 mm x 38 mm

VoR **21983655**

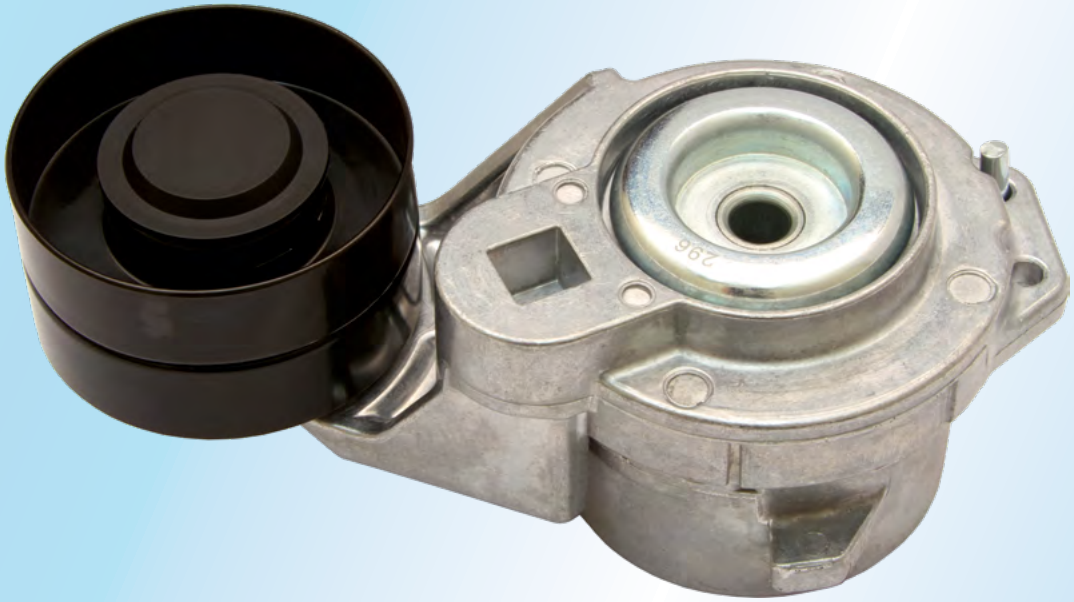



Materials:
Aluminum
Steel

kg 1,42

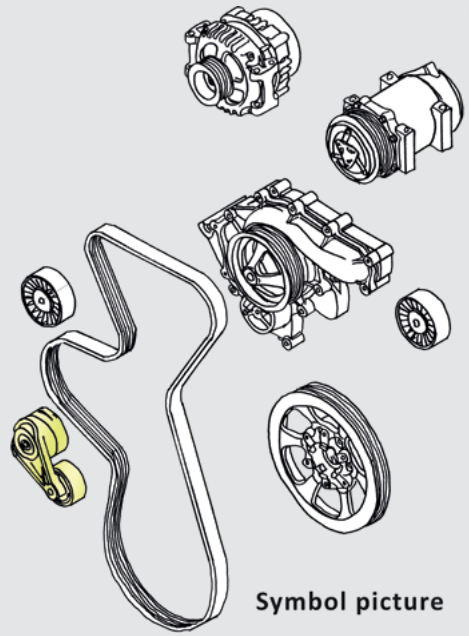

Symbol picture

Fan

FH (4)	13, 16	09/2012→
FM (4)	13	09/2012→

102436

Belt tensioner



VoR

21631484
21145261
21155561
20491753

Materials:
Aluminum
Steel

Koyo

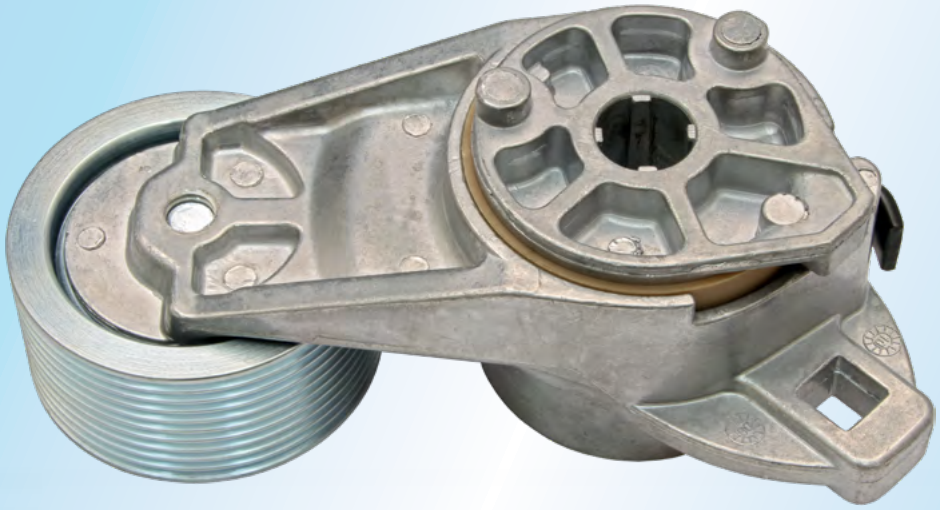

kg 1,99

Fan
Вентилятор

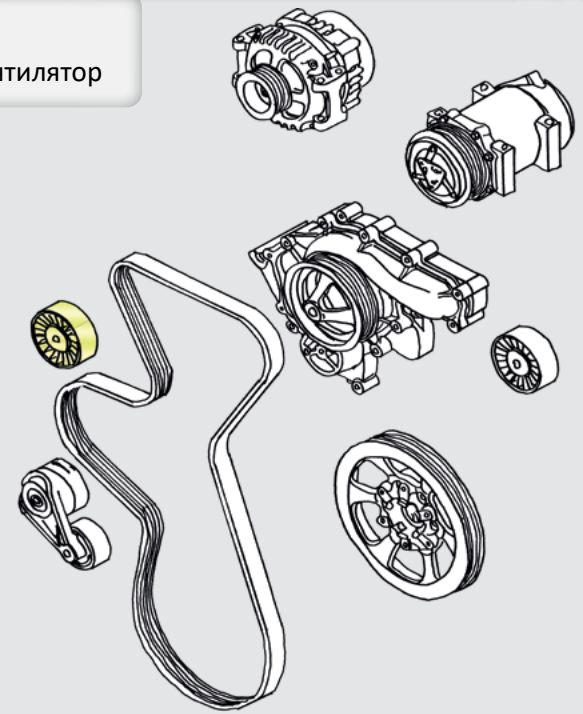

263 Fan / Drive	FH (4)	16	09/2012→
	FH	16	09/2005 - 09/2012
	FH 16	16	09/2003 - 09/2005
874 A/C - compressor	B 12 B	12	1991-2001 EU 1991-2011 BR

102439

Belt tensioner → D11, D13 engines

Ø 74 mm

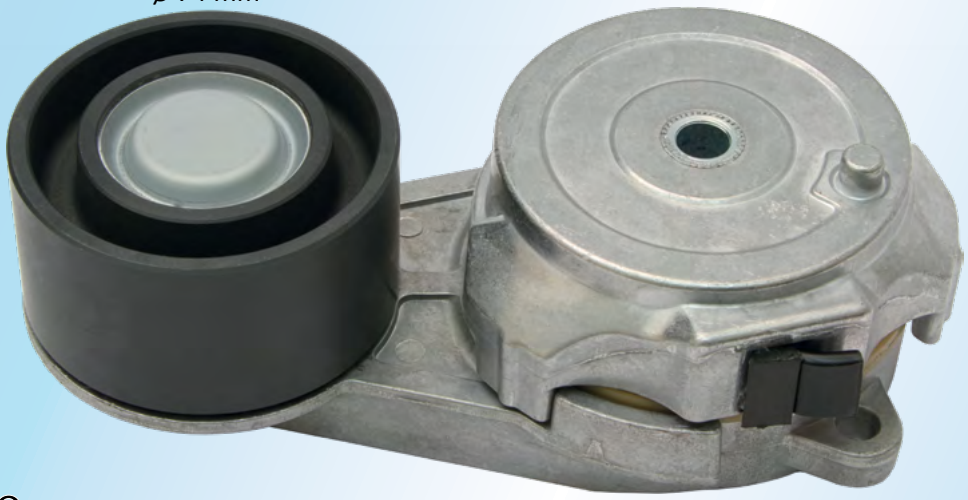

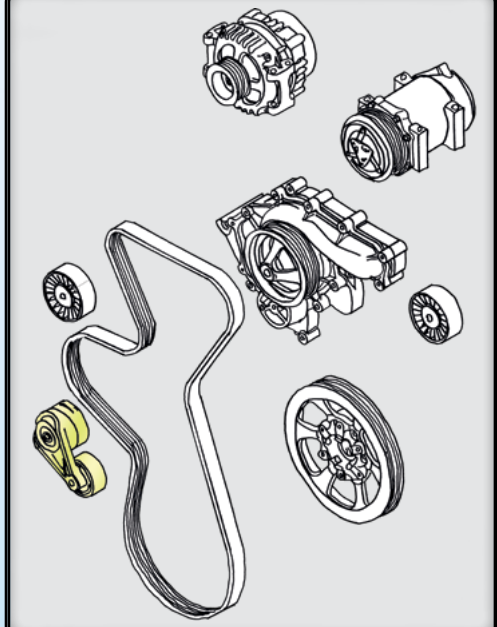

VoR

21819687
21422765
20935521
20739751
3979979

Material:
Aluminum

Roller :
Steel

Koyo

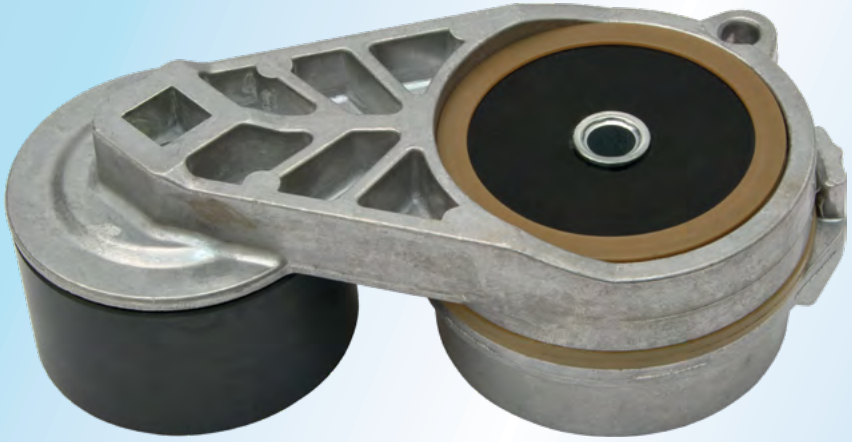

Alternator	FH (4)	13	09/2012→
	FH	13	09/2005 - 09/2012
	FM (4)	11/13	09/2012→
	FM	11/13	09/2005 - 09/2012
Fan	FM	11	09/2005 - 09/2012
Fan	B11R	11	2011-2015 Euro 5
AC			

VoR 21819687

Performance data:

Position	Torque +/- 3 Nm
25°	49 Nm
35°	54 Nm
55°	68 Nm
62°	76 Nm

kg 1,87

*** Important:**

D7 and D9 engines needs belt tensioner with weaker spring:

→ HD 102442 / VoR 21422765

102440

Belt tensioner

VoR

21422767
21404578
20935523
20966526
20762060
8149855

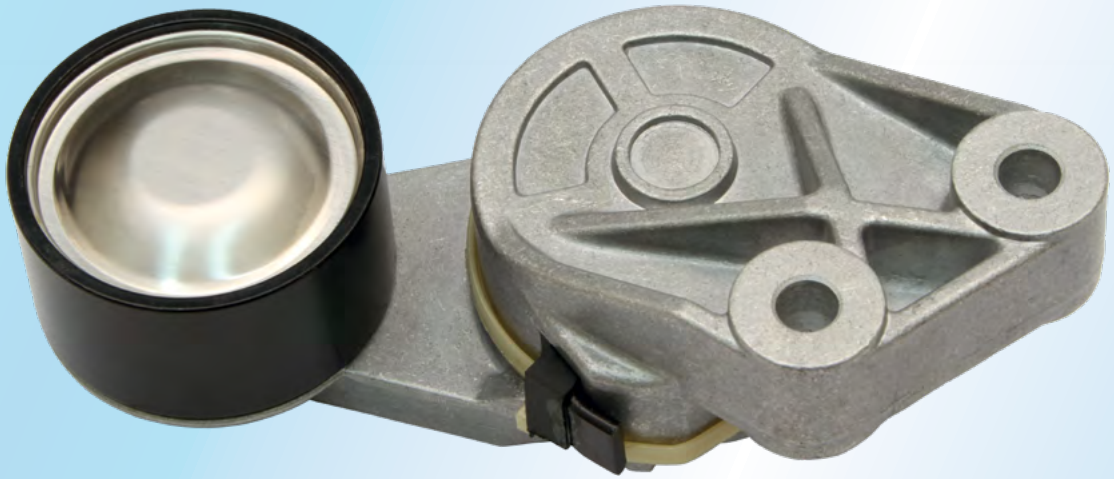

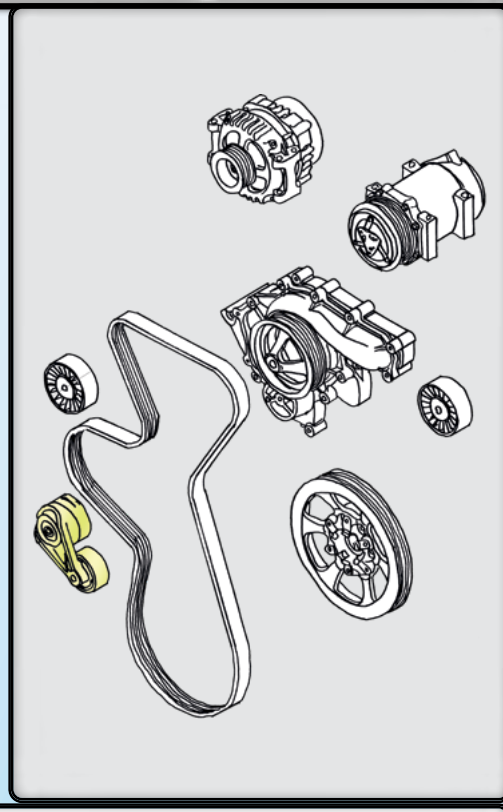

Material: Aluminum
Roller: Steel

Koyo



kg 2,04

Alternator	FH (4)	16	09/2012→
	FH	12, 16	09/2005 - 09/2012
	FH 12	12	01/2002 - 09/2005
	FM	9, 11, 12	09/2005 - 09/2012
	FM 9/12	9, 12	01/2002 - 09/2005
Fan	FM 9	9	12/2001 - 09/2003
	A542185 - A572083		

When belt tensioner VoR 21422767 is replaced by VoR 21454379, bolts needs to be changed.

Belt tensioner VoR 21422767 → 2 pcs bolts: VoR 21344756 M10 x 55 mm

Belt tensioner VoR 21454379 → 2 pcs bolts: Euro 5 → VoR 984755 M10 x 40 mm
Euro 6 → VoR 990862 M10 x 45 mm

102442

Belt tensioner → D7, D9 engines

Ø 74 mm



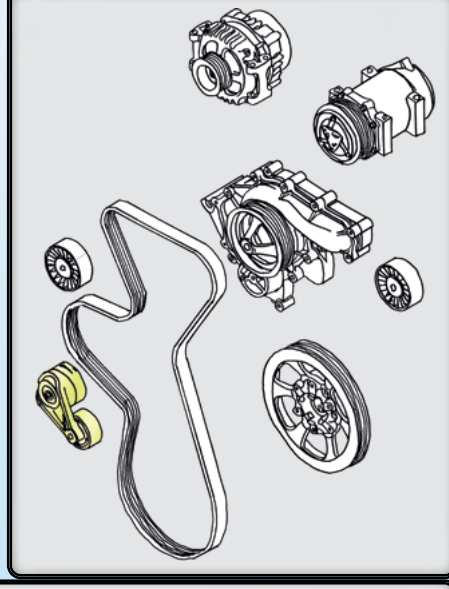

VoR → Alternator, Fan
21422765*
20935521
20739751
3979979

VoR → Alternator, AC
21549016
20924200
20700787
20515543



Material:
Aluminum

Roller :
Steel

Koyo

kg 1,69

VoR 21422765


Alternator


Fan

FM | 9 | 09/2005 - 09/2012

VoR 21422765, 21549016

Performance data:

Position	Torque +/- 3 Nm
25°	45 Nm
35°	50 Nm
55°	56 Nm
62°	60 Nm

*** Important:**

D11 and D13 engines needs belt tensioner with stronger spring:

→ HD 102439 / VoR 21819687

VoR 21549016


Alternator

B7R	2001 - 2013			
R7 / R7LE	2001 - 2013			
B9L/S/TL	2002 - 2013/4			
B12B	1991 - 2001	TD122/123, D12A	Euro 2	1991-2011 br
B12M	1991 - 2001	TD122/123, D12A	Euro 2	1991-2011 br
B13R	2009 - 2015	D13C	Euro 5	


AC

B7R	2001 - 2013
R7 / R7LE	2001 - 2013
B9L/TL	2002 - 2013/4
B5LH	2008→

B12M → VoR 21549016 is replaced by: HD 102440 / VoR 21719386

103053

Sensor → Oil & fuel pressure

With advanced ceramic chip

VoR

22899626
21634021
21302639
20898038
20796740



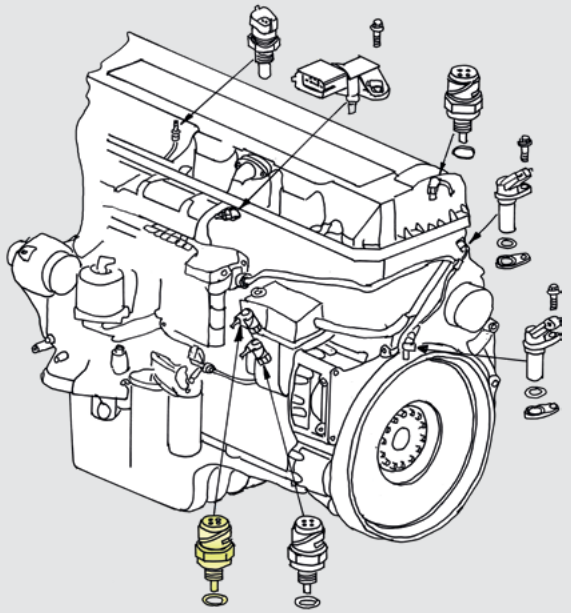

FH (4)	13, 16	09/2012→
FH	13, 16	09/2005 - 09/2012
FM (4)	11, 13	09/2012→
FM	11, 13	09/2005 - 09/2012

B5, B6, B7, B9, B12, B13

Suitable bayonet connector:
HD 317032



DIN 72585-A1

kg 0,06

103618

Clamp

VoR **1629499**

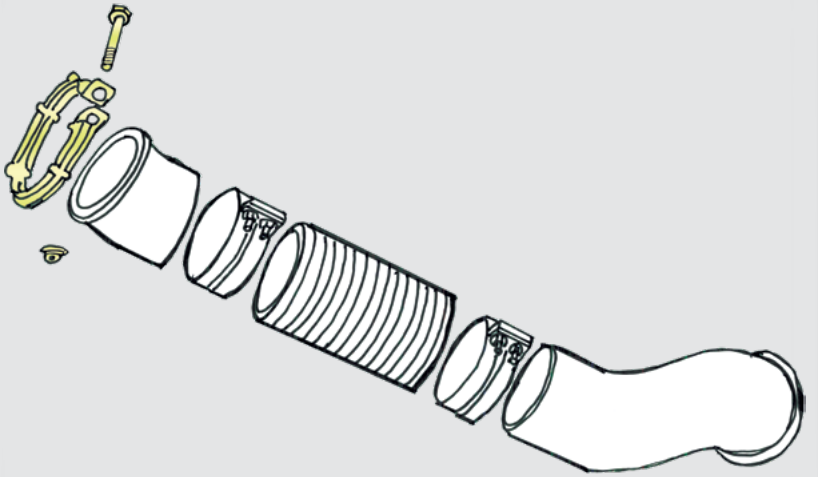

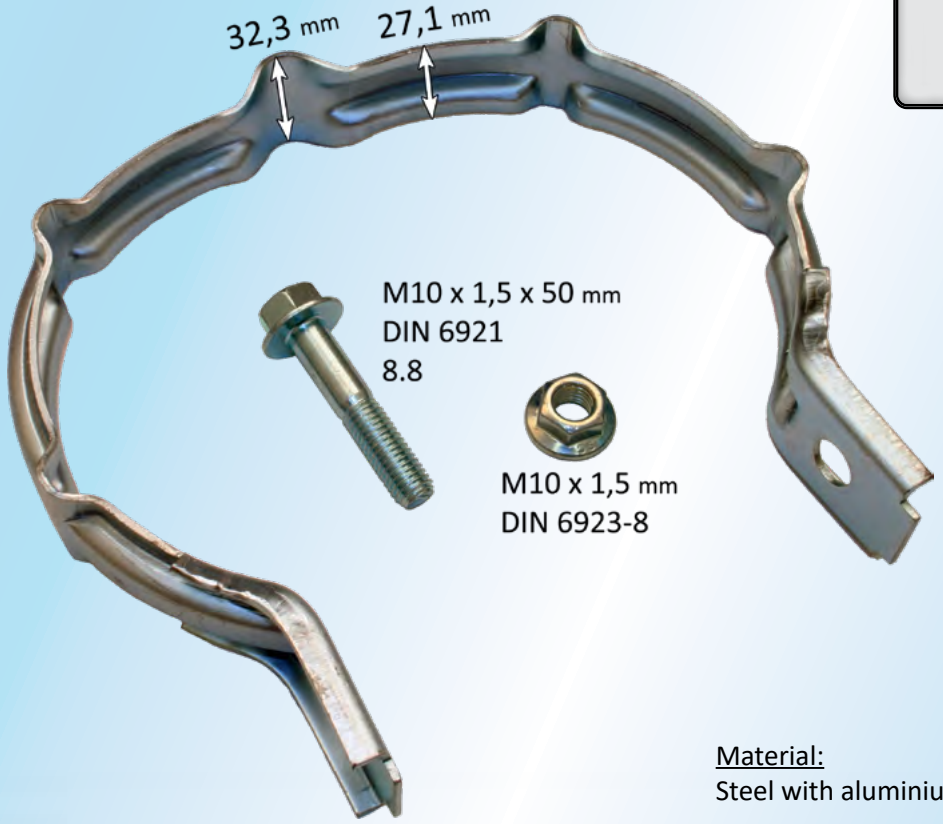

FH ALL
FM ALL

ALL

Material:
Steel with aluminium plated surface.

kg 0,32

103584

Sensor → exhaust gas temperature EGT



VoR **21412472**

Renault R **74 21 412 472**

Working temperature:
-40°C → +150°C



kg 0,2

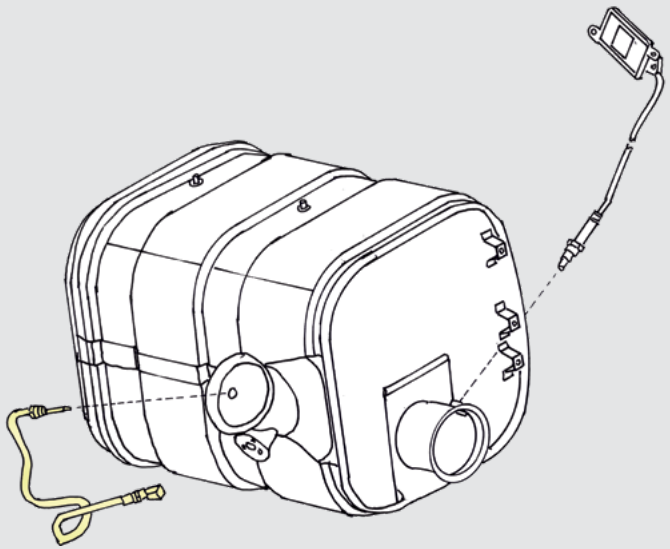

FH (4)	13, 16	09/2012 →
FH	12, 16	09/2005 → 09/2012
FM (4)	13	09/2012 →
FM	11, 13	09/2005 → 09/2012

B7 FB	5	Eur 5
B11R		
B5 LH/LHC/TL (3)		
B8 L/R (3)		
B11R (3)		

103302

Cap for fuel tank

VoR

21776807
21584831
20392751
3198271
8152630
1189577

With air valve
Ilmaventtiilillä
С воздушным клапаном





kg 0,42

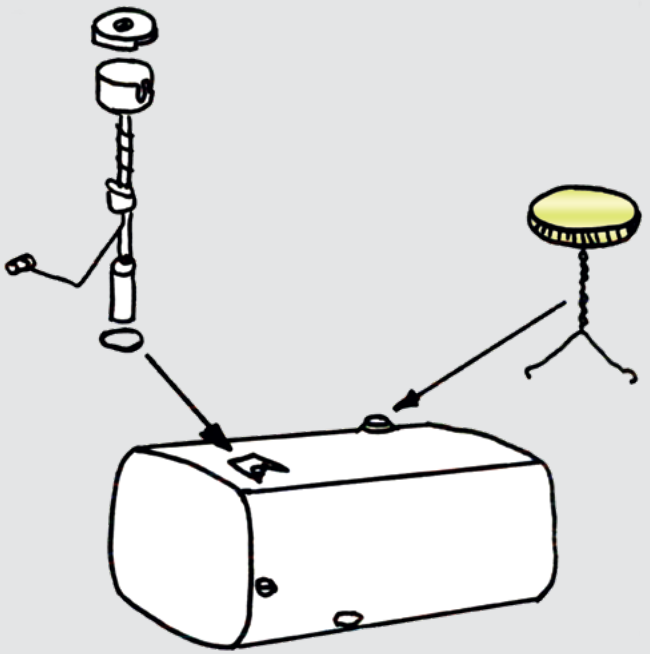

FH (4)	09/2012→
FH	09/2005 - 09/2012
FH 12/16	→ 09/2005
FM (4)	09/2012→
FM	09/2005 - 09/2012
FM 9/12	09/2003 - 09/2005
FM 7/10/12	→ 09/2003

104706

Control valve → clutch pedal for split- and range gearbox

VoR 1653156

Material: Aluminium

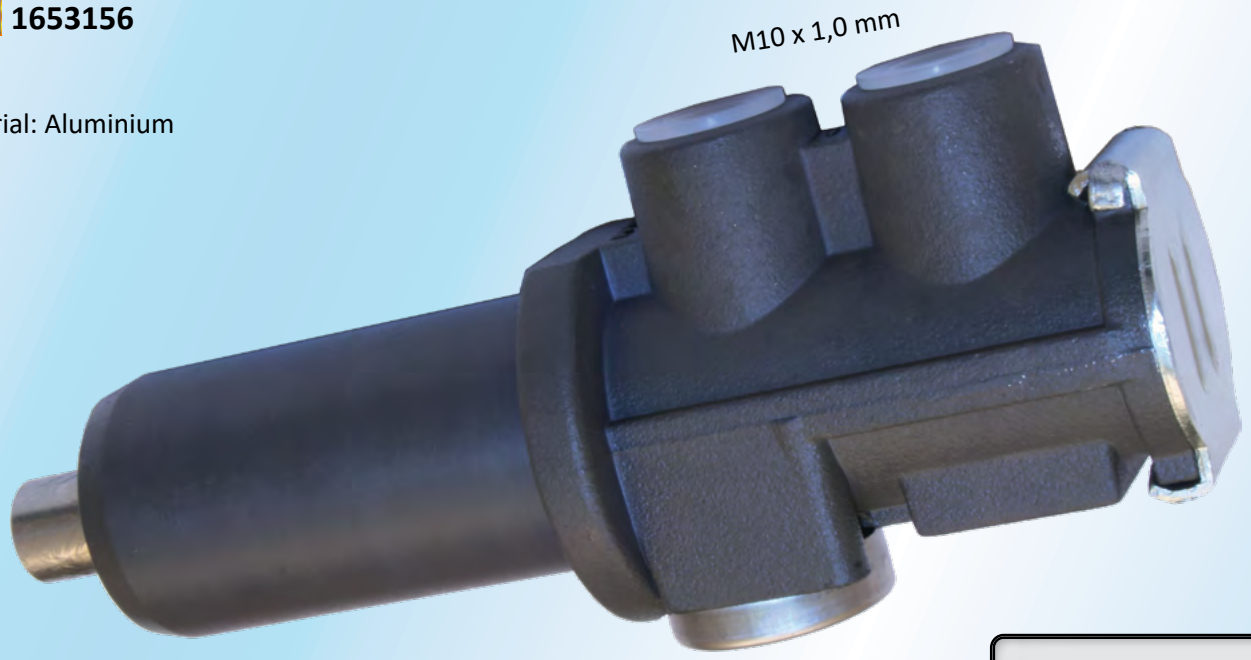

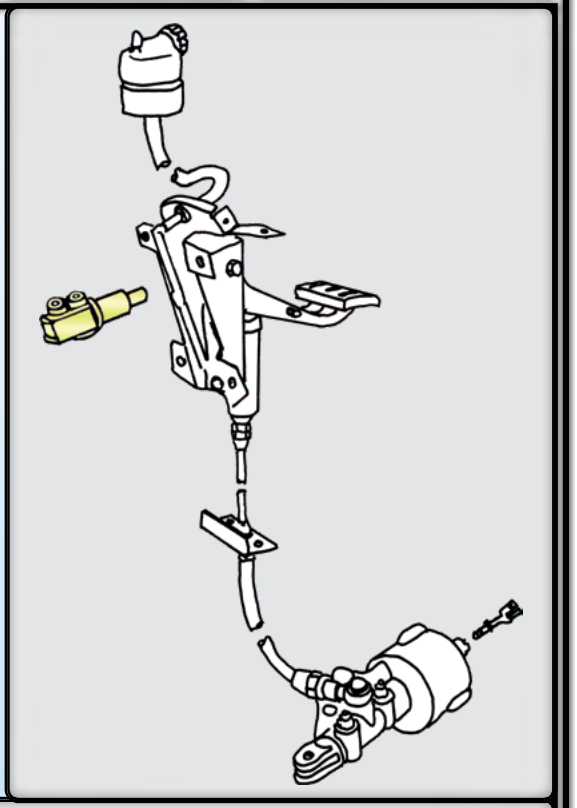

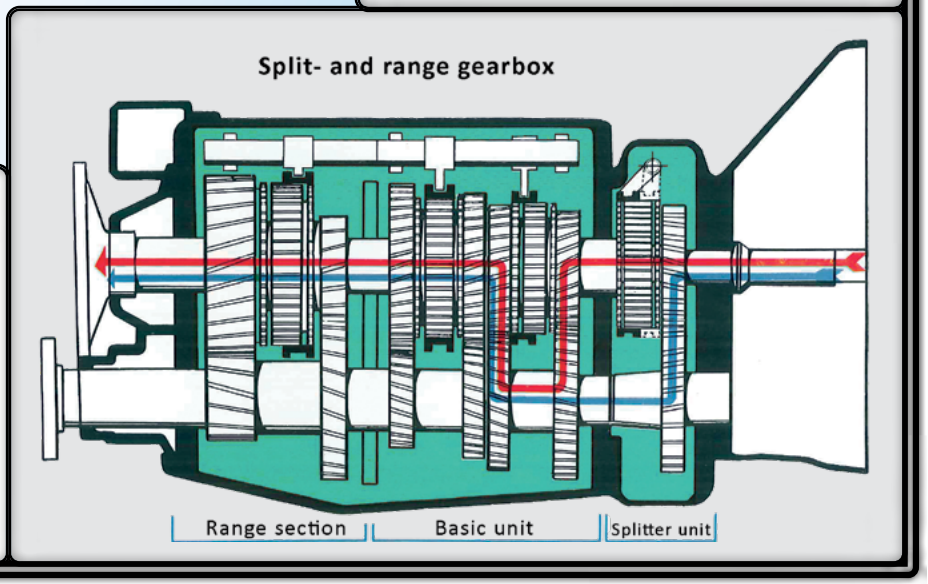

FH	12, 13, 16	09/2005 - 09/2012
FH 12/16	12, 16	09/2003 - 09/2005
FH	12, 16	08/1993 - 09/2003
FM	9, 11, 12, 13	09/2005 - 09/2012
FM 9/12	9, 12	09/2003 - 09/2005
FM 7/10/12	7, 10, 12	08/1998 - 09/2003

kg 0,2

105930

Sensor → RPM instrument

M18 x 1,5 mm



VoR

3171490
1077500
3962959 + 1078490
8150500 + 1078490
1594138 + 1078490





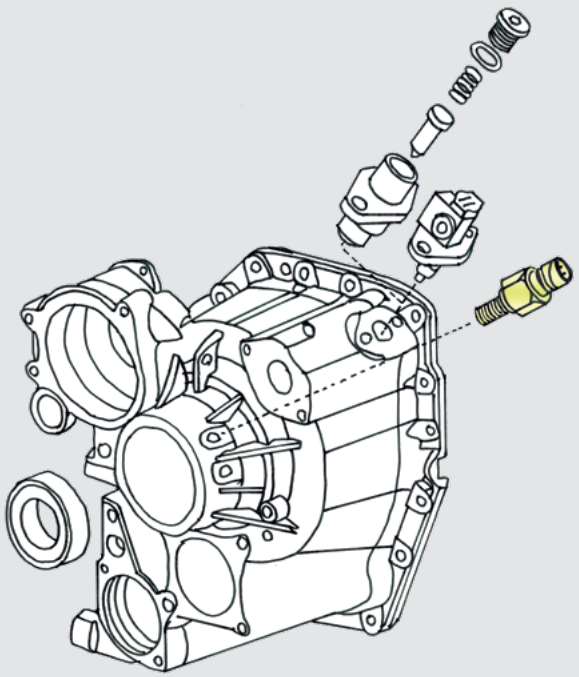

Material: Steel



kg 0,1



Use
1, 3

Suitable bayonet connector:
HD 317032



DIN 72585-A1

FH (4)	13, 16	09/2012→
FH	12, 13, 16	09/2005 - 09/2012
FH 12/16	12, 16	08/1993 - 09/2005
FM (4)	9, 11, 13	09/2012→
FM	9, 12	09/2005 - 09/2012
FM 9/12	9, 12	2001 - 09/2005
FM 7/10/12	7, 10, 12	08/1998 - 2001

B6, B7, B9, B12

105460

Range cylinder

VoR 1656239

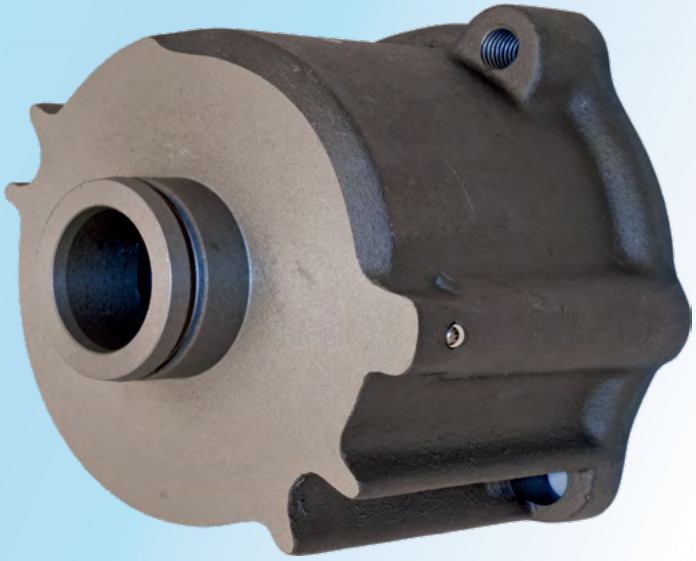

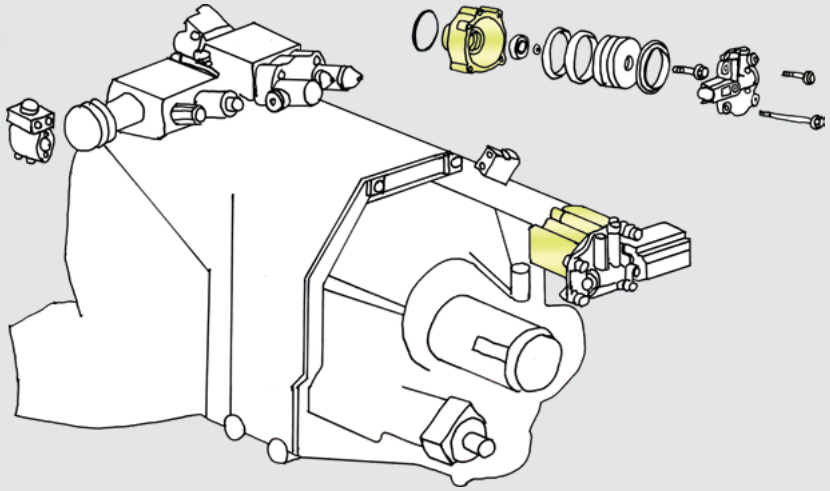

Material: Aluminium



FH (4)	13, 16	09/2012→
FH	12, 13, 16	09/2005 - 09/2012
FH 12/16	12, 16	09/2003 - 09/2005
FM (4)	9, 11, 13	09/2012→
FM	9, 12	09/2005 - 09/2012
FM 9/12	9, 12	2001 - 09/2005
FM 7/10/12	7, 10, 12	1998 - 2001

B7, B9, B12

Suitable kit:

HD 105465



Suitable magnetic valve:

HD 105467



kg 0,75

105465

Seal kit → range cylinder

VoR

3093230
3092050
276820





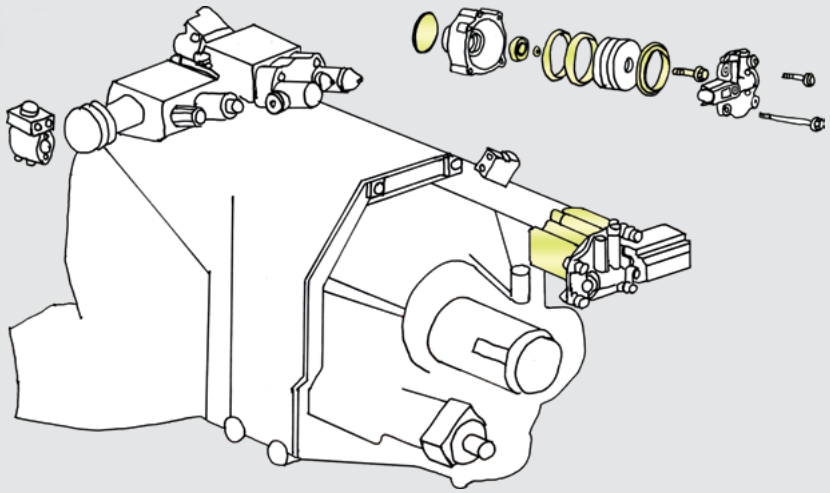

FH (4)	13, 16	09/2012→
FH	12, 13, 16	09/2005 - 09/2012
FH 12/16	12, 16	09/2003 - 09/2005
FM (4)	9, 11, 13	09/2012→
FM	9, 12	09/2005 - 09/2012
FM 9/12	9, 12	2001 - 09/2005
FM 7/10/12	7, 10, 12	1998 - 2001

B7, B9, B12

Suits for range cylinder:

HD 105460



kg 0,1

105467

Magnetic valve → range cylinder



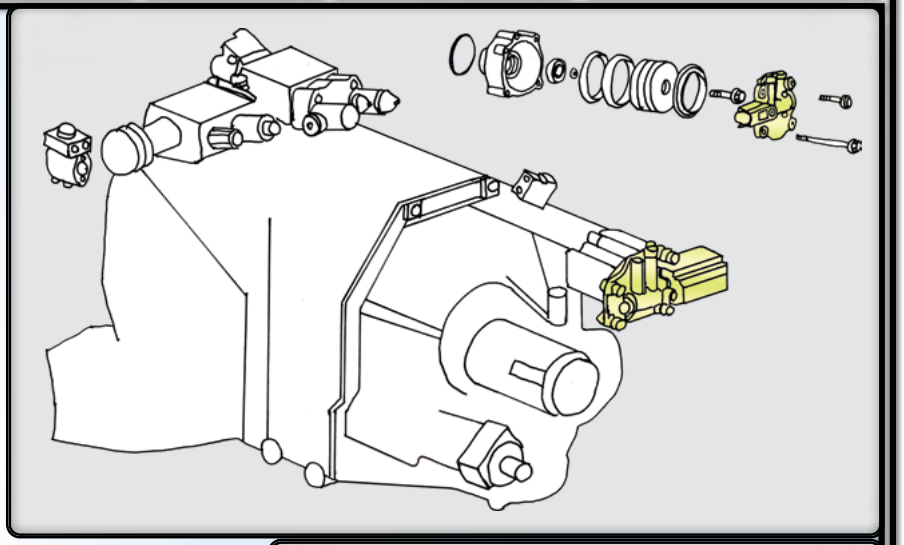

VoR

21450362
20590252
20514657
20366720
3192385

Material: Aluminium

Suitable bayonet connector:
HD 317032
16



DIN 72585-A1

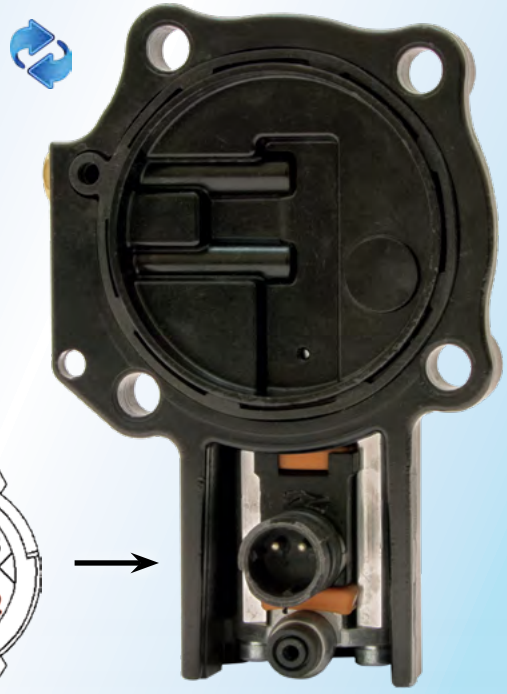



Use
1, 3

FH (4)	13, 16	09/2012→
FH	12, 13, 16	09/2005 - 09/2012
FH 12/16	12, 16	09/2003 - 09/2005
FM (4)	9, 11, 13	09/2012→
FM	9, 12	09/2005 - 09/2012
FM 9/12	9, 12	2001 - 09/2005
FM 7/10/12	7, 10, 12	1998 - 2001

Suits for range cylinder:
HD 105460



kg 0,86

Pic 1

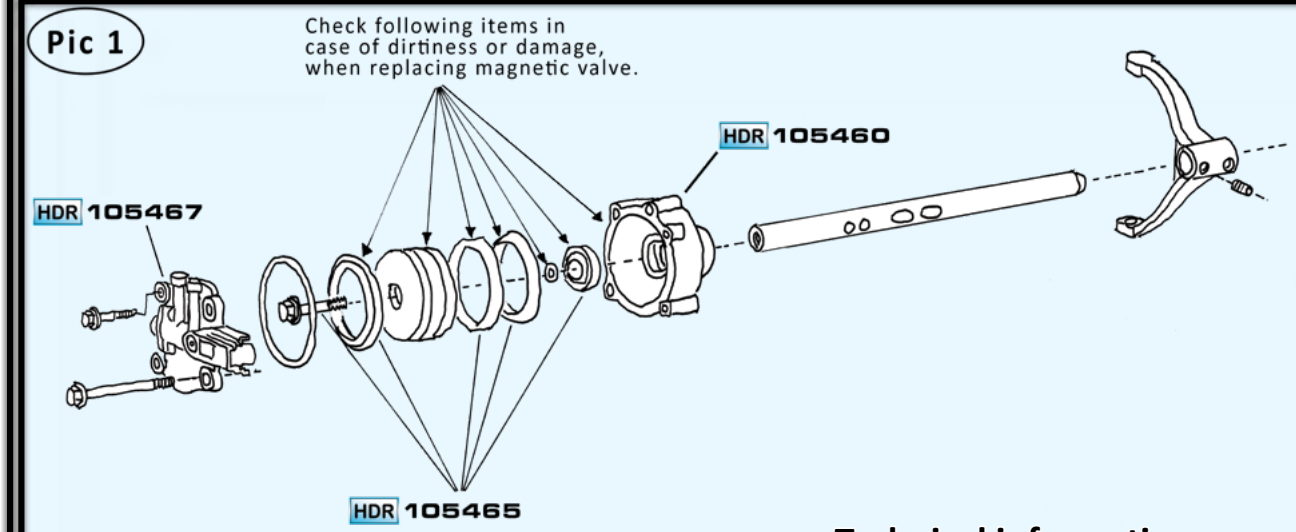



Technical information concerning product 105467

From time to time we have received similar warranty claims about our valves leaking air under the cover of the valve cylinder. (See picture 1.) This information is made to prevent unnecessary malfunctions on the vehicle.

Our product development staff have done extensive tests with the product and have noticed, that the main reasons for the leaks aren't actually coming from the valve. In most of the cases the dirtiness in the range cylinder and on the piston is causing air leakage problems and difficulties for changing between the lower and upper range of gears. (See picture 2.)

Jamming piston might not be a problem for a long time, because the working pressure remains high enough to move piston from lower to upper range and vice versa. Although it's not causing any problems with the gear shifting, it begins to damage the magnetic valve. It is highly likely that the dirty air dryer filter, aging air compressor or malfunctions in the air pressure control could cause malfunctions in the range cylinders and magnetic valves. Therefore, we recommend that you will make proper diagnostics on these items too.

When replacing the magnetic valve, we strongly recommend to clean the range cylinder for preventing the problems caused by dirtiness. If the range cylinder components aren't cleaned, it may cause damage to the magnetic valve and it will leak. Also, check the air system components in case of the components are dirty or the air pressure is too high to prevent any malfunctions caused by those reasons. We also recommend you to make a restoration for the range cylinder and change the necessary products, which can be found in our HD 105465 kit. (See picture 2.) If the range cylinder itself is badly worn, it can be replaced with product HD 105460. (See picture 2.)

Problems caused by jamming range cylinder pistons, dirtiness inside the system or too high system pressure may result in the rejection of the claim.

Версия на русском языке на обратной стороне

Suomenkielinen versio toisella puolella

Tekninen tiedote tuotteesta 105467

Olemme ajoittain saaneet samankaltaisia takuuanomuksia, joissa magneettiventtilin sylinterin päässä olevan kannen alta vuotaa ilmaa. (Kuva 1.)

Seuraavan tiedotteen avulla pyritään estämään turhia vikoja.

Tuotekehitysosastomme on tehnyt laajoja testejä magneettiventtiileille ja olemme havainneet, että vuotojen syyt eivät pääasiallisesti johdu magneettiventtiilistä. Suurimmassa osassa tapauksista ongelmat johtuvat aluevaihtajan sylinteriin päässeestä liasta, jolloin aluevaihtaja takeltelee ja paineilma karkaa venttiilin kautta ulos. (Kuva 2.)

Takelteleva mäntä ei välttämättä aiheuta ongelmia vaihteiden vaihdossa pitkään aikaan, koska ilmajärjestelmän paine pysyy riittävän korkeana liikuttaakseen aluevaihtajan mäntää. Vaikka järjestelmä toimiikin, niin järjestelmän paineen karkaaminen entistä suuremmissa määrin magneettiventtiilin lävitse saattaa aiheuttaa venttiilin rikkoutumisen. On erittäin todennäköistä, että likaantunut ilmankuivaimen patruuna, väljä kompressori tai paineensäädössä esiintyvät ongelmat vaurioittavat aluevaihtajaa sekä magneettiventtiileitä. Tästä syystä suosittelemme, että suoritatte vikatilanteissa myös tarkistuksia muille ilmajärjestelmien komponenteille.

Uusittaessa magneettiventtiiliä, suosittelemme puhdistamaan aluevaihtajan sylinterin sekä männän ennaltaehkäisevänä toimenpiteenä. Tällöin vältytään lian aiheuttamilta ongelmilta. Mikäli puhdistusta ei suoriteta, saattaa magneettiventtiili vaurioitua ja alkaa vuotamaan.
Tarkastakaa myös muut paineilmakomponentit lian tai liian korkean järjestelmäpaineen varalta ehkäistäksesi mahdolliset vikatilanteet edellä mainituista syistä johtuen.

Magneettiventtiilin vaihtamisen yhteydessä suosittelemme myös huoltamaan aluevaihtajan ja vaihtamaan tiivisteet, mitkä löytyvät HD 105465 sarjasta. (Kuva 2.)

Mikäli aluevaihtajan sylinteri itsessään on kulunut, se on korvattavissa tuotteella HD 105460. (Kuva 2.)

Takuutapaukset, joissa vian aiheuttajana on takelteleva mäntä, järjestelmän likaisuus tai liian korkeat järjestelmäpaineet, voivat johtaa takuuanomuksen hylkäämiseen.

Техническая информация касательно позиции 105467

Время от времени мы получаем похожие гарантийные требования касательно утечки воздуха под крышкой цилиндра наших клапанов. (См. рисунок 1.)

Цель данного информационного файла - предотвратить ненужные сбои в работе транспортного средства.

Наши сотрудники из отдела разработки продукции провели обширные испытания с клапаном и заметили, что сам клапан не является основной причиной утечки. В большинстве случаев грязь в цилиндре диапазона и на поршне вызывает проблемы утечки воздуха и затрудняет переключения между нижним и верхним диапазоном передач. (См. рисунок 2.)

Заклинивание поршня может не вызывать проблем в течение длительного времени, потому что рабочее давление остается достаточно высоким для перемещения поршня из нижнего в верхний диапазон и наоборот. Несмотря на то, что это не вызывает каких-либо проблем с переключением передач, начинается повреждение магнитного клапана.
Весьма вероятно, что грязный фильтр-осушитель воздуха, стареющий воздушный компрессор или неисправности в контроле давления воздуха могут привести к неисправностям в цилиндрах диапазона и магнитных клапанах. Поэтому, мы также рекомендуем вам сделать надлежащую диагностику по этим вопросам.

При замене магнитного клапана, мы настоятельно рекомендуем очистить цилиндр диапазона для предотвращения проблем, вызываемых грязью. Если компоненты цилиндра диапазона не очищены, это может привести к повреждению магнитного клапана, и он будет течь.
Кроме того, пожалуйста проверьте компоненты системы воздуха на предмет загрязнения а также давление воздуха, не слишком ли оно высоко, чтобы предотвратить любые неисправности, вызываемые этими причинами.

Мы также рекомендуем восстановить цилиндр диапазона и поменять необходимые детали, которые можно найти в нашем HD 105465 комплекте. (См. рисунок 2.)

Если сам цилиндр диапазона сильно изношен, он может быть заменен HD позицией 105460. (см рисунок 2)

Проблемы, вызванные заклиниванием поршня цилиндров диапазона, грязью внутри системы или слишком высоким давлением в ней, могут быть причиной отклонения гарантийного иска.

English version at other side

105912

Inhibitor valve → gearbox air lines / housing (rear)

VoR **1672231**

Material: Aluminium

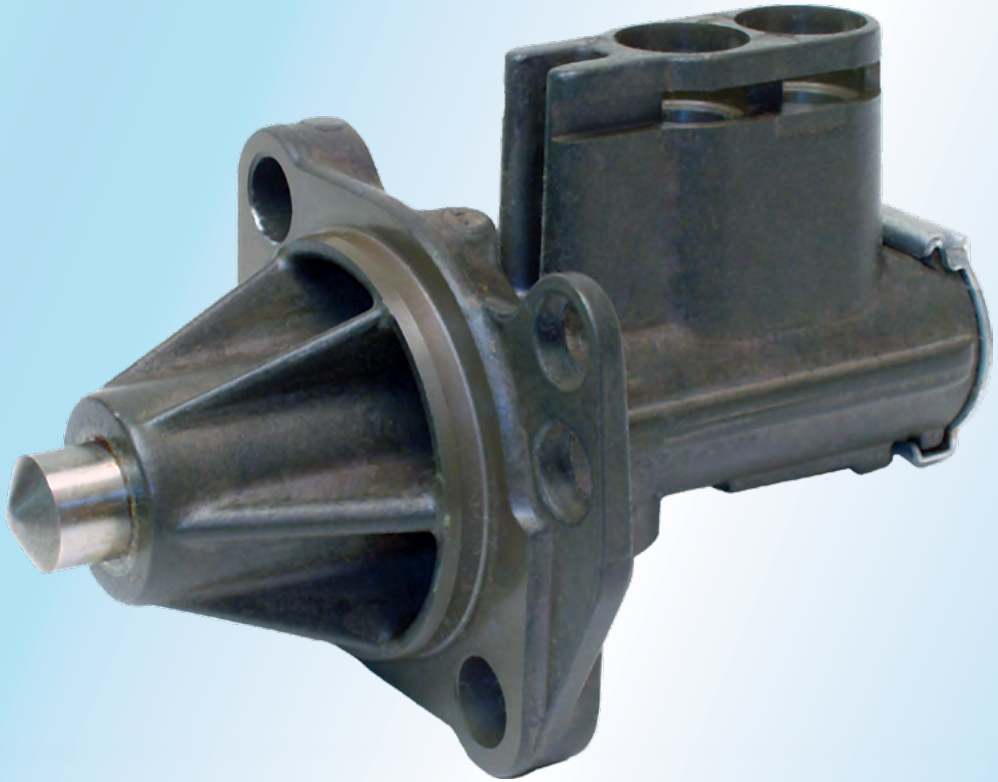

kg 0,33

Gearbox air lines

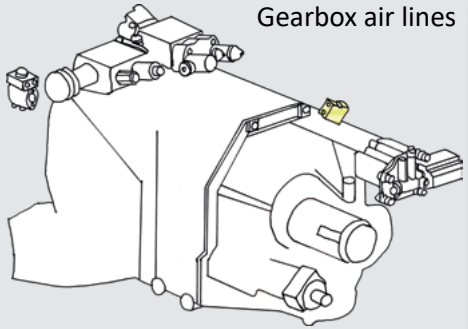

Housing (rear)

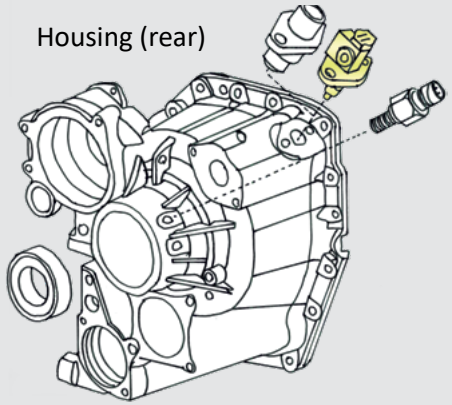

FH (4)	13, 16	09/2012→
FH	12, 16	09/2005 - 09/2012
FH 12/16	12, 16	01/2002 - 09/2005
FM (4)	9, 11, 13	09/2012→
FM	9, 12	09/2005 - 09/2012
FM 9/12	9, 12	01/2002 - 09/2005

HEAVY DUTY HD - PARTS

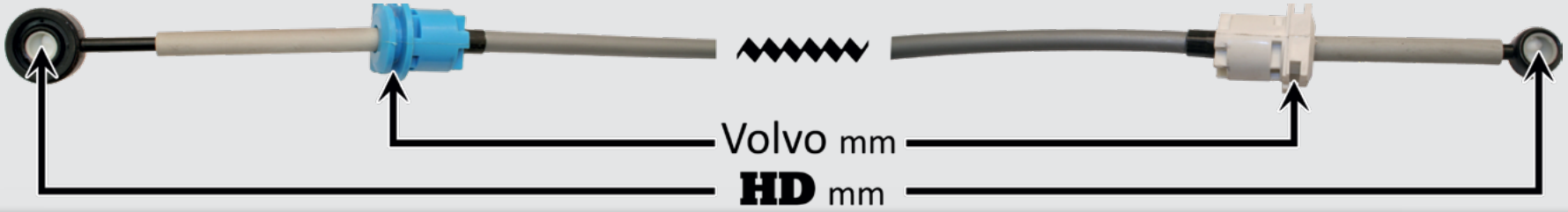

All Volvo FH and FM trucks since 1999 with manual transmission have been fitted with the Cable Shift System. All cables are push-pull type.

This information helps you identify the Volvo cables:

Shift cables are grey color:

FH cables have partial thick insulation for heat protection.
FM have no additional heat protection covers.

Big headed cables are meant for Long distance / Distribution driving.
Small heads are meant for Construction driving.

These cables are for forward and back movement.

Select cables are black colour:

FH cables have partial thick insulation for heat protection.
FM have no additional heat protection covers.

All select cable heads are small, so they cover
Long distance / Distribution / Construction.

These cables are for side to side movement.

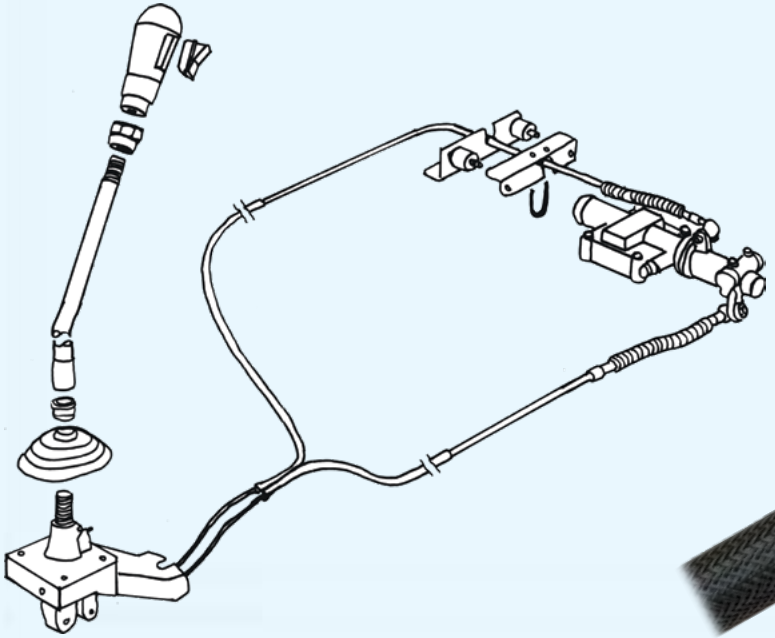



RC = Range gear shifting
SRC = Split and range gear shifting

When installing gear shift cables:

- Make sure that the correct cable lengths and types are used.
- Connect gearshift cables to regulator housing side first.
- The gear selector lever cable (grey) goes in the upper cable pass-through. (marked blue on the regulator housing)
- While routing the cables according to the vehicle manufacturers instructions, see that they are not bent or twisted together.
- Do not grease the cables.

Grey cable:

Blue bracket = rear
White bracket = front

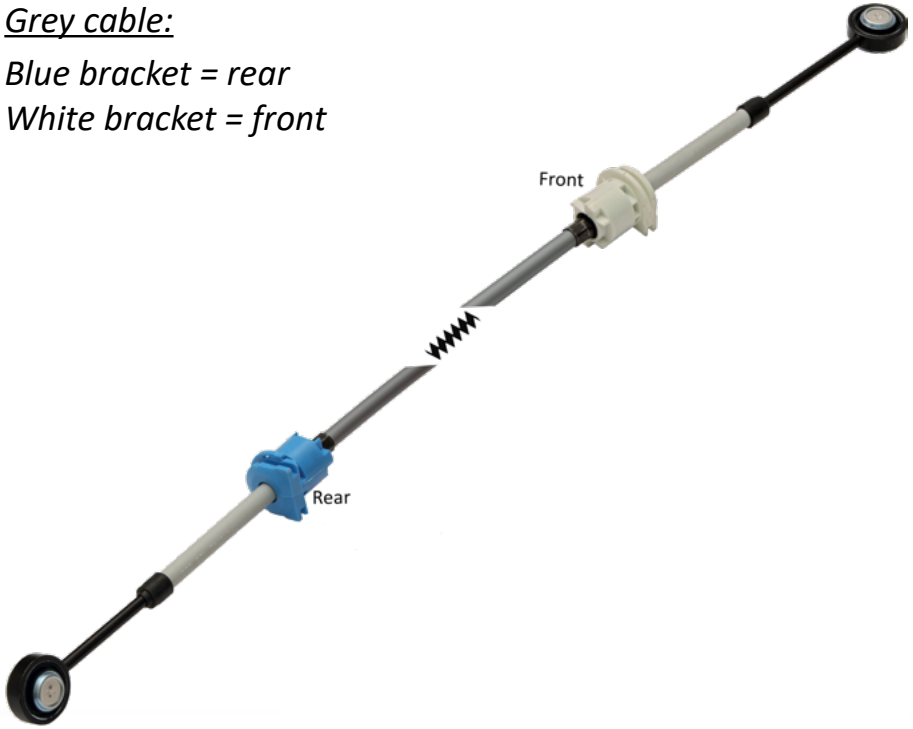

Black cable:

Orange bracket = rear
Black bracket = front

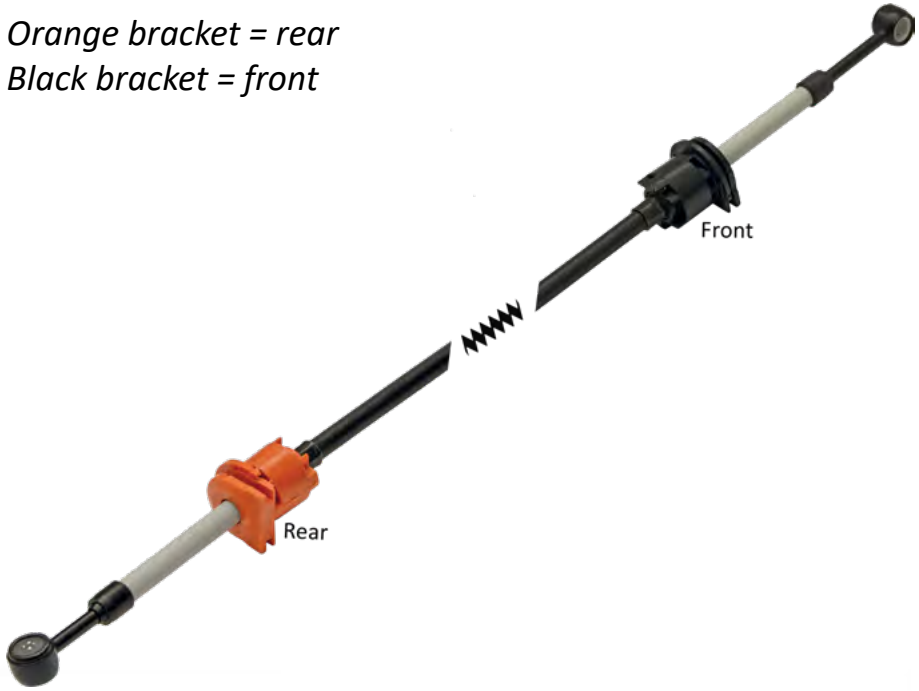

Инструкция по установке тросов переключения передач:

- *Удостоверьтесь что используется трос правильного типа и правильной длины.*
- *<u>В первую</u> очередь трос следует прикрепить к коробке управления.*
- *Трос по переключению передач (серого цвета) проводится по верхнему каналу (отмечен синим цветом на коробке управления).*
- *Следуя инструкциям производителя транспортного средства по уставке тросов важно не допустить их переплетения или сгибания.*
- *Не наносите смазку на тросы.*

<u>Серый трос:</u>

Синие крепление = заднее
Белое крепление = переднее



<u>Черный трос:</u>

Оранжевое крепление = заднее
Черное крепление = переднее



105820

VoR

Shift cable
- Big heads
- Grey cable
- Black cover

20475021
22274161
21448621

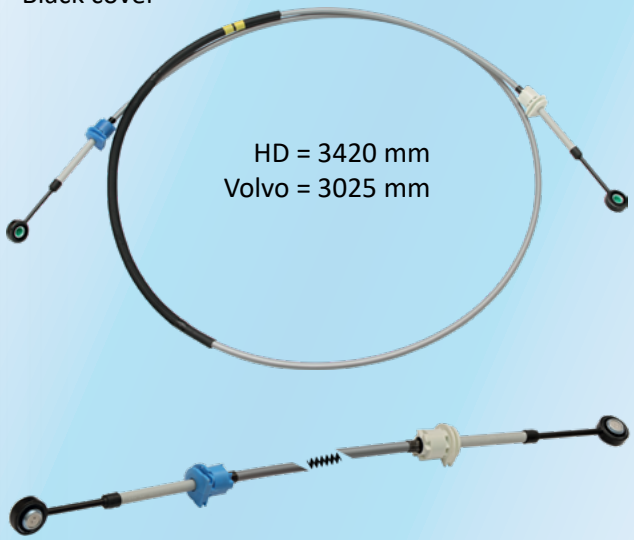

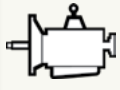

Gearbox side
Blue side left

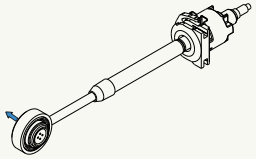



Shifter side
White side down

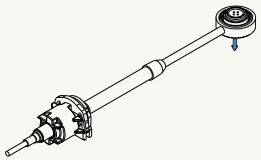

FH (4) | 13 | SRC + RC | 09/2012 →

Long distance | Distribution

105831

VoR

Shift cable
- Small heads
- Grey cable
- Black cover

20475083
22274181
21897683

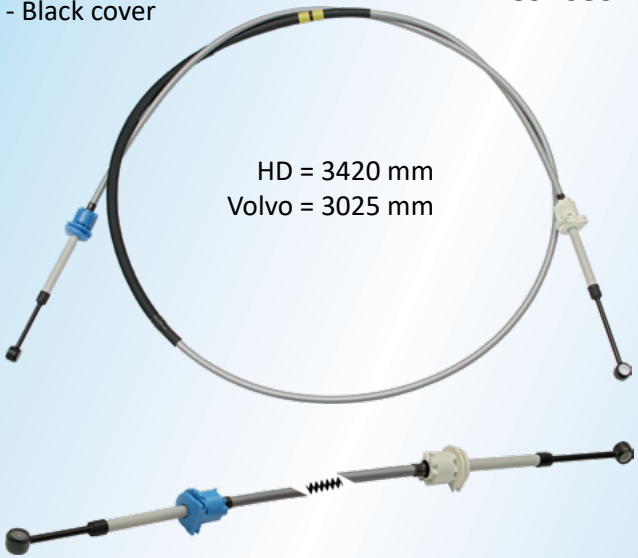

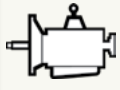

Gearbox side
Blue side down

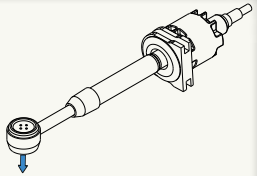



Shifter side
White side right

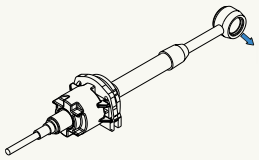

FH (4) | 13 | SRC + RC | 09/2012 →

Construction

105821

VoR

Select cable
- Small heads
- Black cable
- Black cover

20475022
22274162
21446822



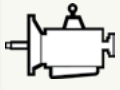

Gearbox side
Orange side down

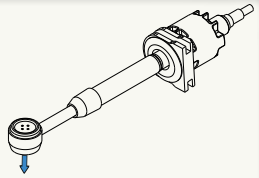



Shifter side
Black side left

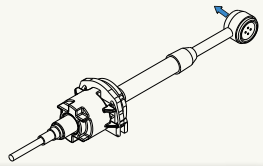

FH (4) | 13 | SRC + RC | 09/2012 →

105822

Shift cable
- Big heads
- Grey cable
- Black cover

VoR
20475025
22274165
21446825



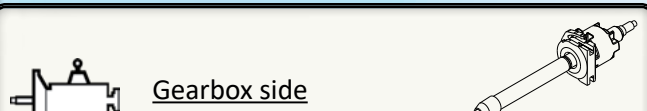
Gearbox side
Blue side left


Shifter side
White side down

FH (4) | 16 | SRC | 09/2012 →

Long distance | Distribution

105832

Shift cable
- Small heads
- Grey cable
- Black cover

VoR
20475087
22274185
21897687

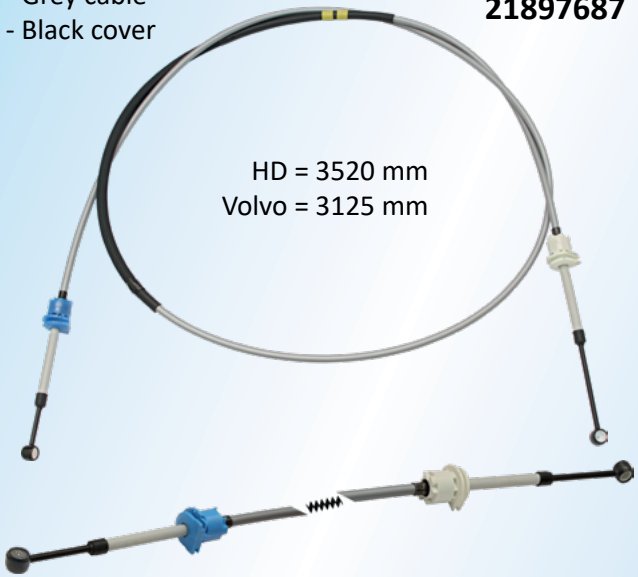

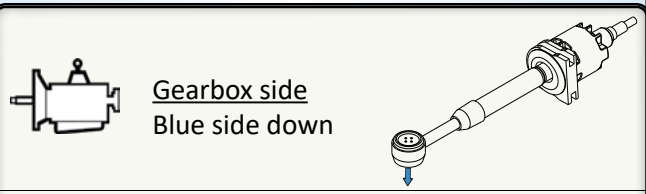
Gearbox side
Blue side down

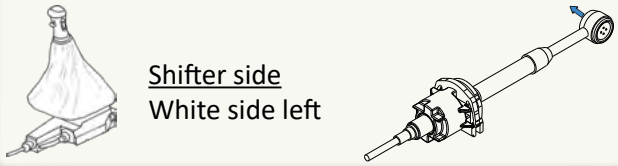
Shifter side
White side left

FH (4) | 16 | SRC | 09/2012 →

Construction

105824

Select cable
- Small heads
- Black cable
- Black cover

VoR
20475026
22274166
21446826



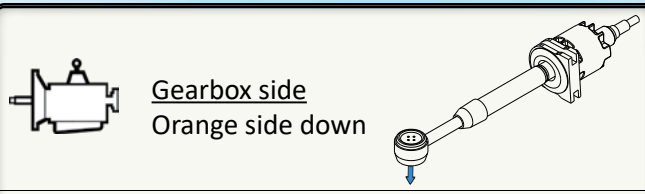
Gearbox side
Orange side down

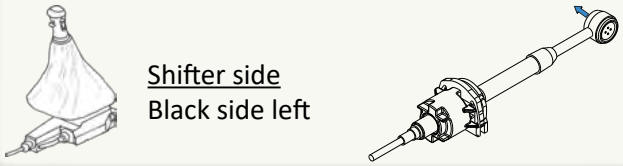
Shifter side
Black side left

FH (4) | 16 | SRC | 09/2012 →

105825

VoR

20475029
21446829

Shift cable
- Big heads
- Grey cable
- No cover

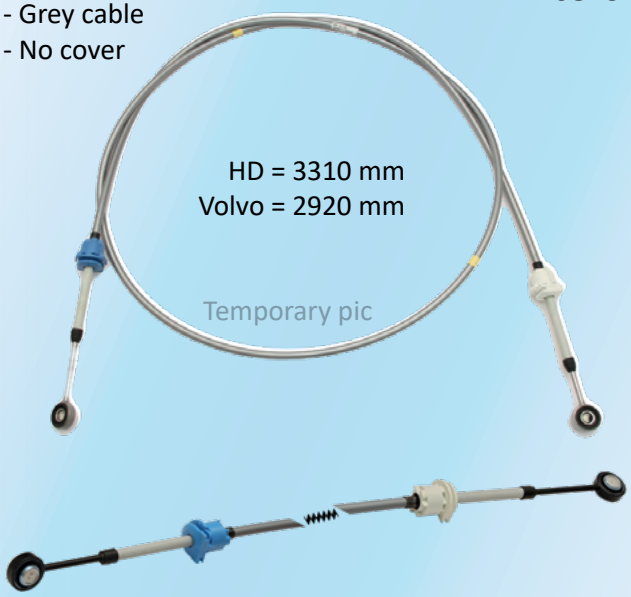

Gearbox side
Blue side left

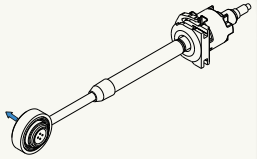

Shifter side
White side down

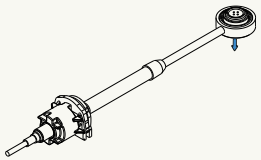

FM (4) | 11 | RC | 09/2012 →

Long distance | Distribution

105833

VoR

20475091
21897691

Shift cable
- Small heads
- Grey cable
- No cover

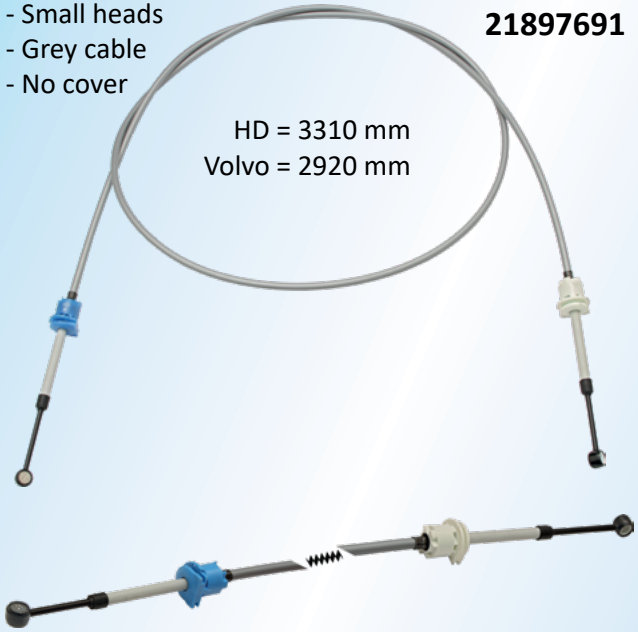

Gearbox side
Blue side down

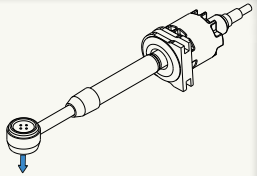

Shifter side
White side left

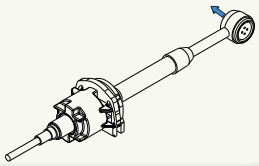

FM (4) | 11 | RC | 09/2012 →

Construction

105826

VoR

20475030
21446830

Select cable
- Small heads
- Black cable
- No cover



Gearbox side
Orange side down

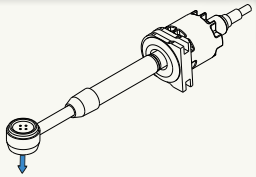

Shifter side
Black side right

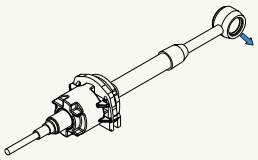

FM (4) | 11 | RC | 09/2012 →

105827

VoR

Shift cable
- Big heads
- Grey cable
- No cover

20475033
21446833



Gearbox side
Blue side left

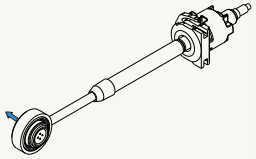

Shifter side
White side up

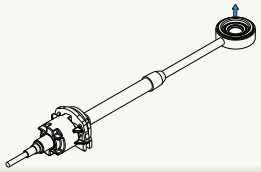

FM (4)	11	SRC	09/2012 →
FM (4)	13	RC	09/2012 →

Long distance | Distribution

105834

VoR

Shift cable
- Small heads
- Grey cable
- No cover

20475095
21897695

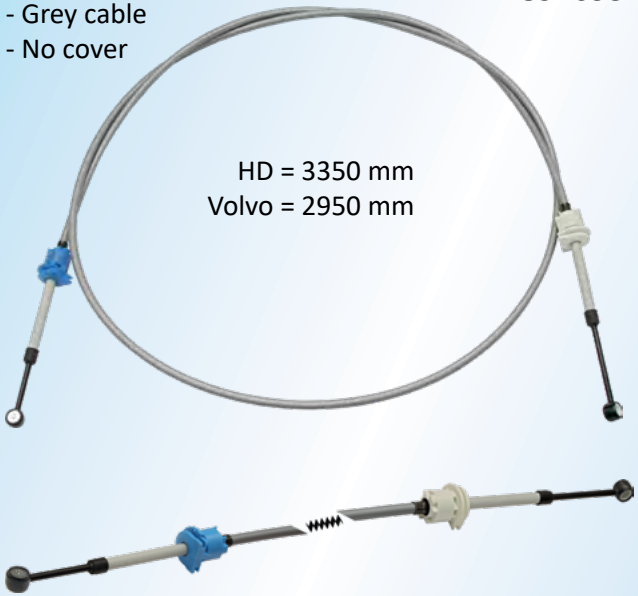

Gearbox side
Blue side down

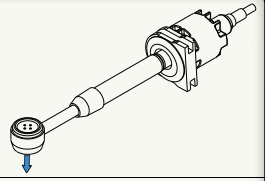

Shifter side
White side left

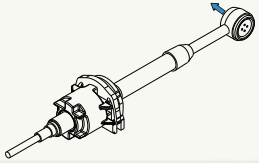

FM (4)	11	SRC	09/2012 →
FM (4)	13	RC	09/2012 →

Construction

105828

VoR

Select cable
- Small heads
- Black cable
- No cover

20475034
21446834



Gearbox side
Orange side down

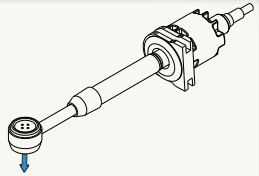

Shifter side
Black side right

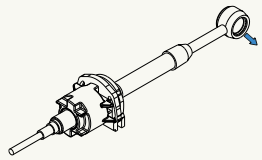

FM (4)	11	SRC	09/2012 →
FM (4)	13	RC	09/2012 →

105829

VoR

Shift cable
- Big heads
- Grey cable
- No cover

20475037
21446837

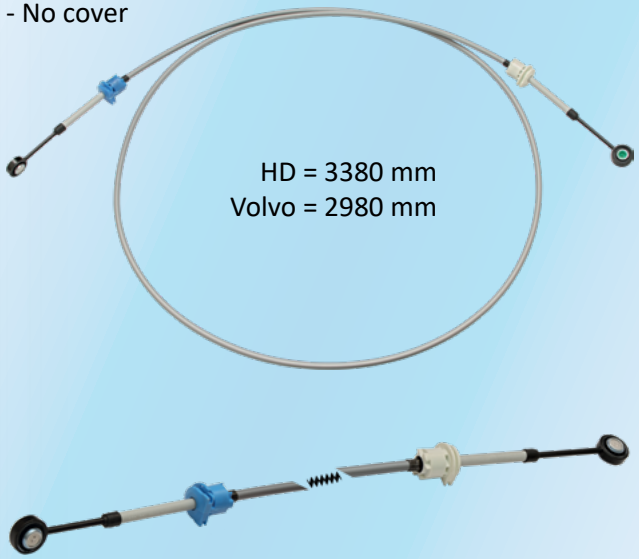

Gearbox side
Blue side left

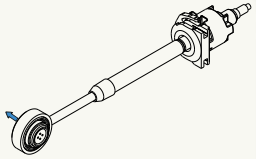

Shifter side
White side up

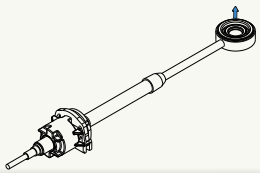

FM (4) | 13 | SRC | 09/2012 →

Long distance | Distribution

105835

VoR

Shift cable
- Small heads
- Grey cable
- No cover

20475099
21897699

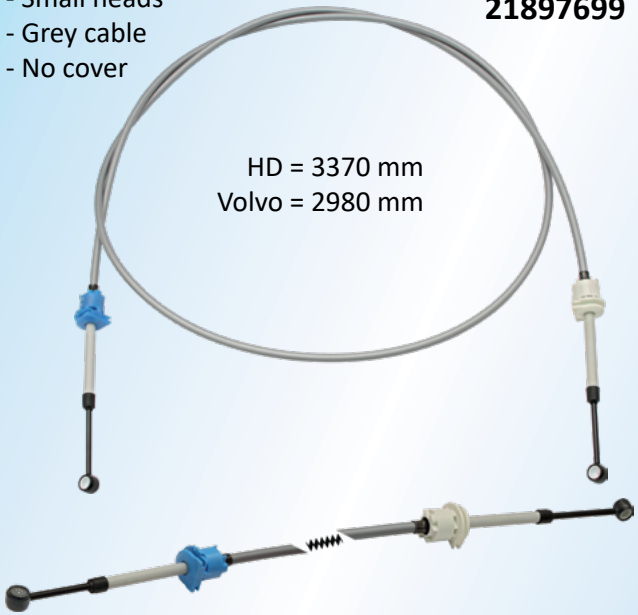

Gearbox side
Blue side left

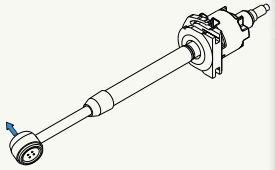

Shifter side
White side up

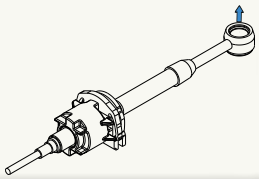

FM (4) | 13 | SRC | 09/2012 →

Construction

105830

VoR

Select cable
- Small heads
- Black cable
- No cover

20475038
21446838



Gearbox side
Orange side down

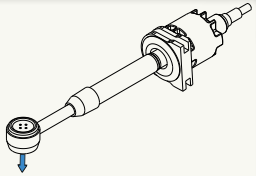

Shifter side
Black side right

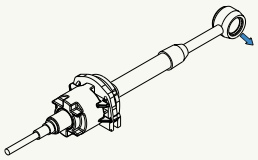

FM (4) | 13 | SRC | 09/2012 →

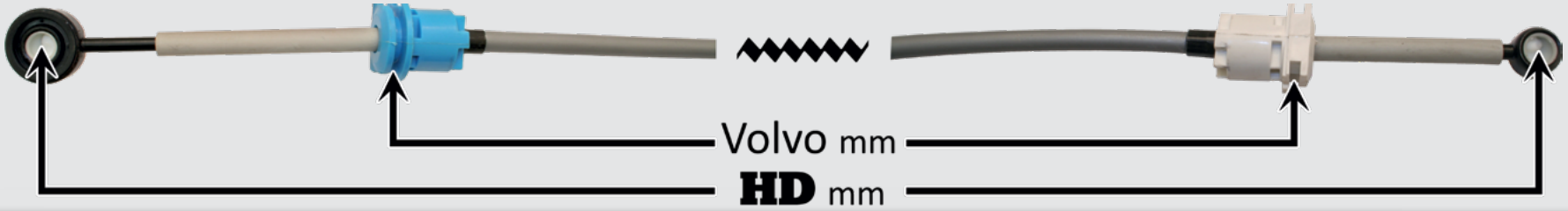

105851

Shifting cable with big heads HD: 3,28 m / Volvo: 2,89 m

VoR

21789667
21343551
21002851
20700951
20545951

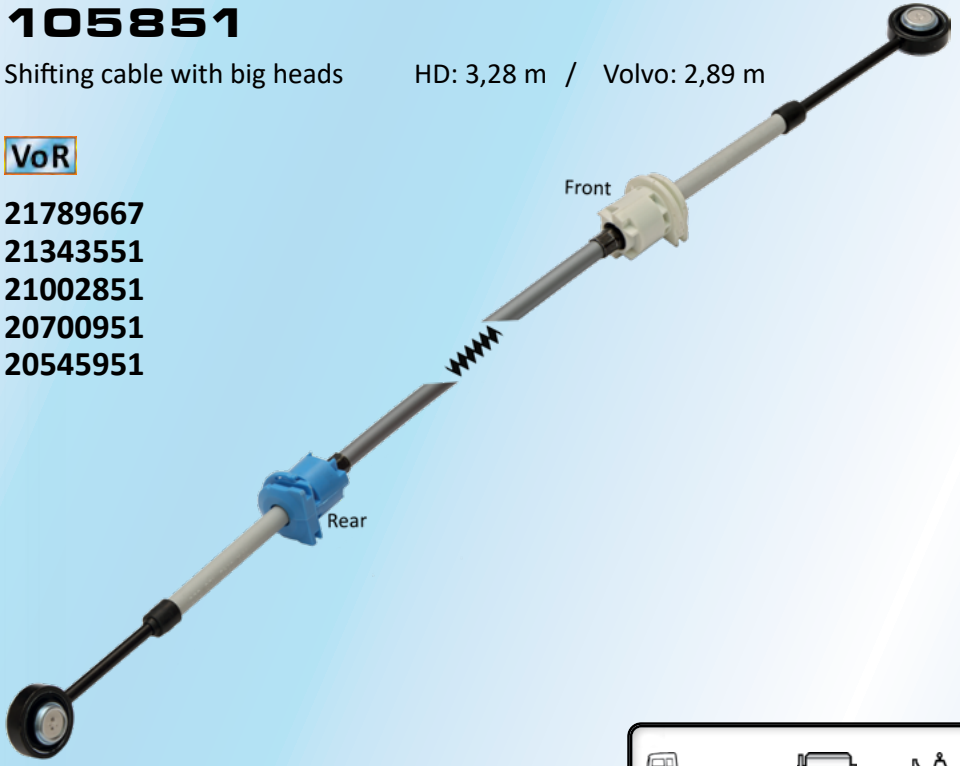



kg 1,2

105852

Select cable with small heads HD: 3,32 m / Volvo: 3,06 m

VoR

21789668
21002852
20700952
20545952





kg 1,1

FM	9	SRC	09/2005 - 09/2012
FM	11	SRC	09/2005 - 09/2012
FM	13	RC	09/2005 - 09/2012
FM 9	9	SRC	01/2002 - 09/2005
FM 12	12	RC	01/2002 - 09/2005

RC = Range gear shifting cable controlling
SRC = Split- and range gear shifting cable controlling

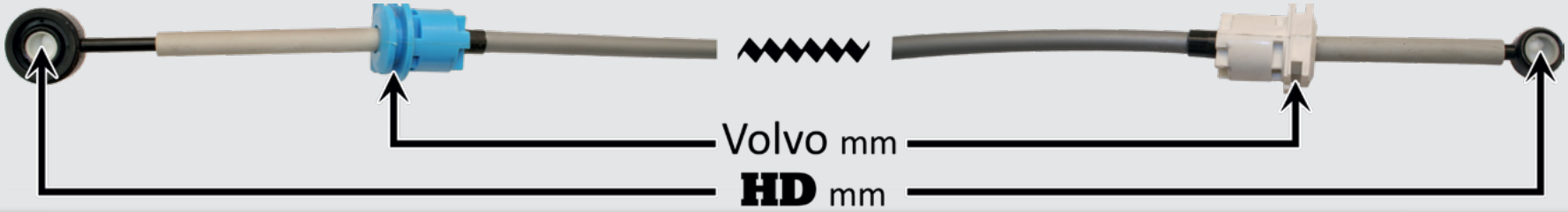

105855

Shifting cable with big heads HD: 3,305 m / Volvo: 2,915 m

VoR

21789671
21343555
21002855
20700955
20545955





kg 1,06

105856

Select cable with small heads HD: 3,345 m / Volvo: 3,085 m

VoR

21789672
21002856
20700956
20545956





kg 1,1

FM	13	SRC	09/2005 - 09/2012

SRC = Split- and range gear shifting cable controlling

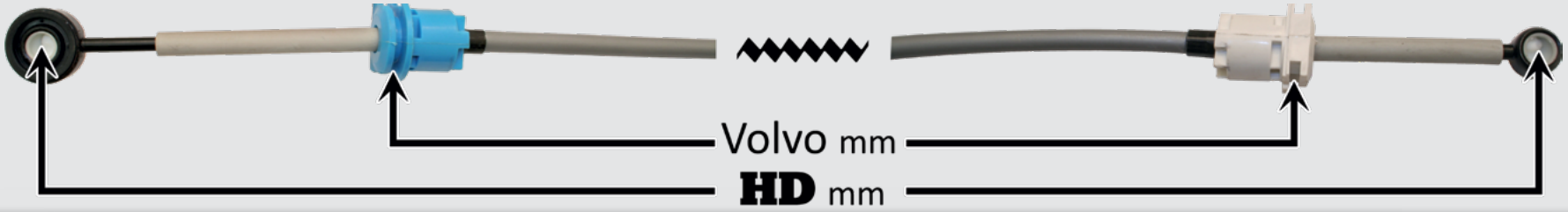

105865

Shifting cable with big heads HD: 3,04 m / Volvo: 2,65 m

VoR

21789683
21343565
21002865
20700965
20545965





kg 0,96

105866

Select cable with small heads HD: 3,01 m / Volvo: 2,75 m

VoR

21789684
21002866
20700966
20545966





kg 0,93

FH	13	SRC	09/2005 - 09/2012

SRC = Split- and range gear shifting cable controlling

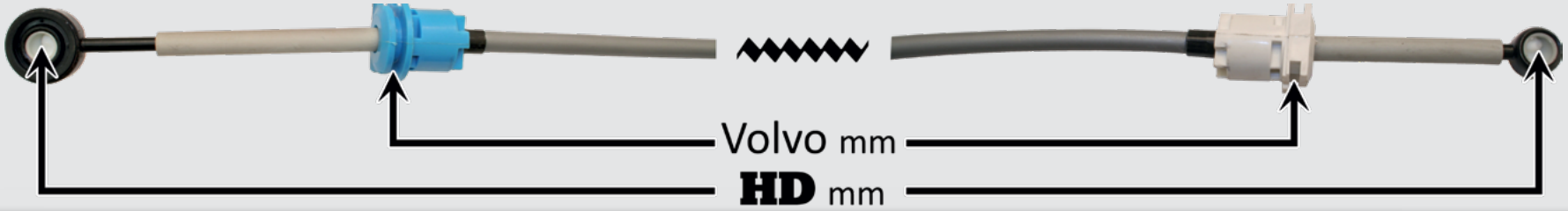

105859

Shifting cable with big heads HD: 3,335 m / Volvo: 2,94 m

VoR

21789675
21343559
21002859
20700959
20545959
21002860



Clearance product !



kg 1,22

105860

Select cable with small heads HD: 3,37 m / Volvo: 3,11 m

VoR

21789676
21002860
20700960
20545960



Clearance product !



kg 1,08

FM	12	SRC	09/2003 - 2006

SRC = Split- and range gear shifting cable controlling

105900

Shift rod for transmission control system

VoR **20365902**

Renault R **7420365902**

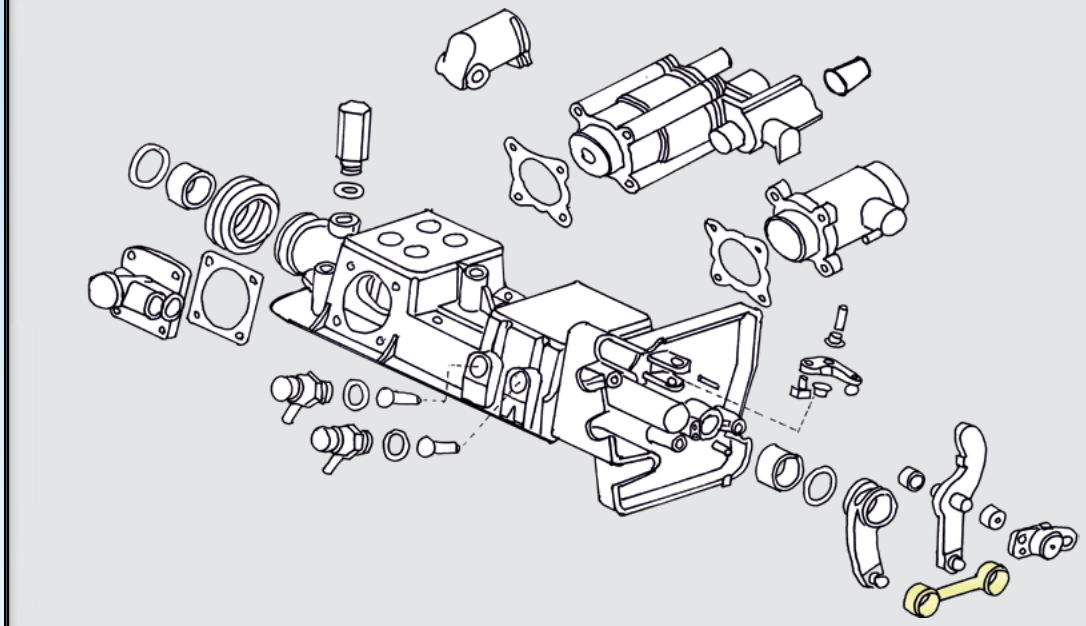



kg 0,07

FH (4)	09/2012→
FH	01/2002 - 09/2012
FM (4)	09/2012→
FM	01/2002 - 09/2012

Cable manouvered

GSS - **RC** = Range gear shifting
GSS - **SRC** = Split and range gear shifting

106060

Universal joint kit, lubricated

S-series = Small

The exchange of the universal joint and its balance must always be checked in accordance with the vehicle manufacturer's instructions.

Замена крестовины карданного вала и её балансировка всегда должны проверяться в соответствии с инструкциями производителя транспортного средства.

Nivelristin vaihto ja sen tasapaino on tarkistettava aina ajoneuvon valmistajan ohjeiden mukaisesti.

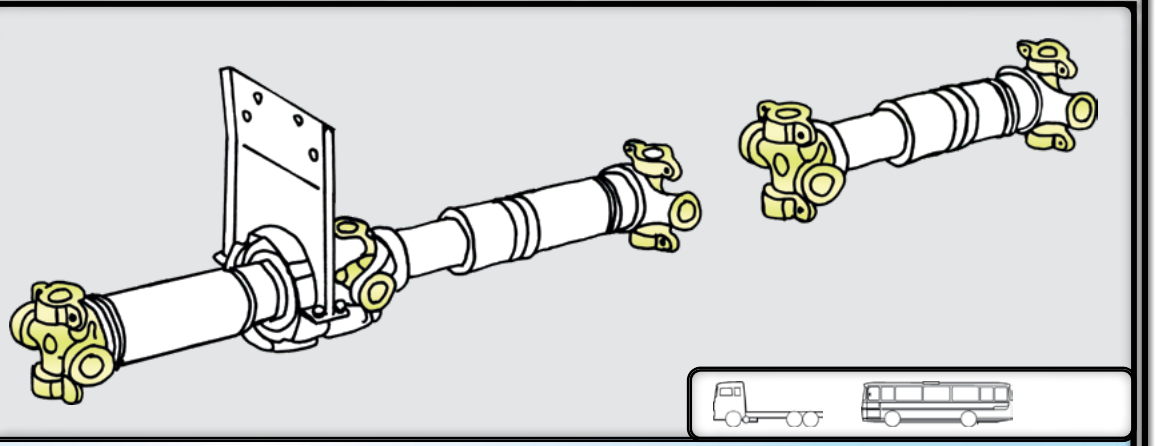

VoR

1068247
23420765
1651164
276336

Renault R

50 01 855 838
74 20 876 290

Iveco R

4253 4498
4253 3410
4253 6996
9319 2012

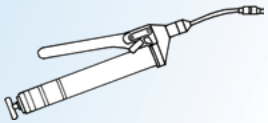





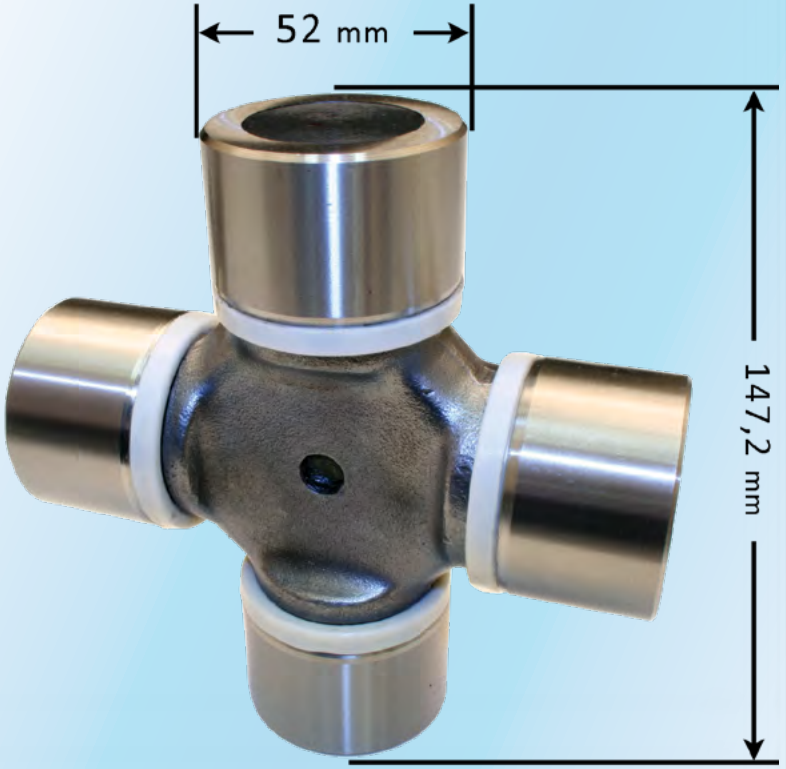

kg 3,47

106062

Universal joint kit, lubricated

M-series = Medium

The exchange of the universal joint and its balance must always be checked in accordance with the vehicle manufacturer's instructions.

Замена крестовины карданного вала и её балансировка всегда должны проверяться в соответствии с инструкциями производителя транспортного средства.

Nivelristin vaihto ja sen tasapaino on tarkistettava aina ajoneuvon valmistajan ohjeiden mukaisesti.

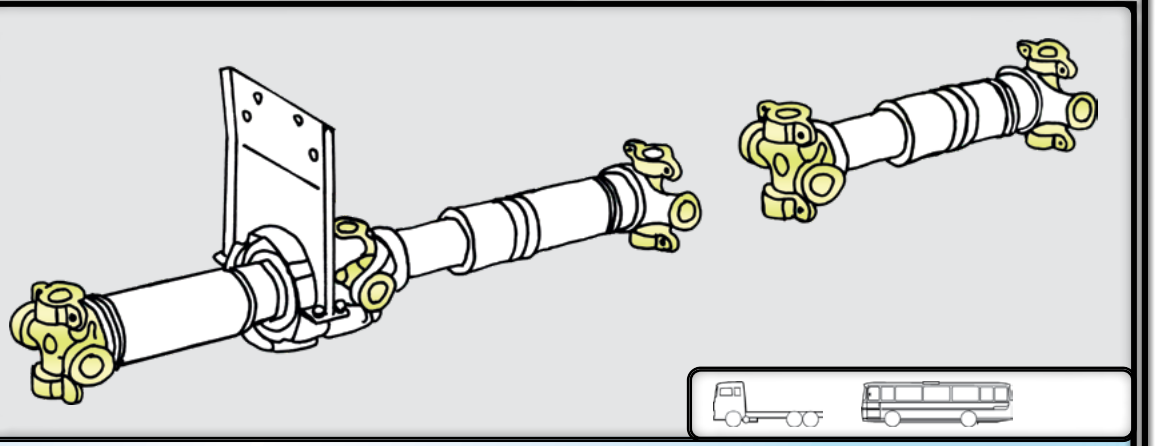

VoR

1068250
23420766
1068215

MBR

387 410 0031
620 410 0031
940 410 0031
655 410 0031

ManR

81.39108.6048
81.39126.6006
81.39374.6003

DAF R **1288229**

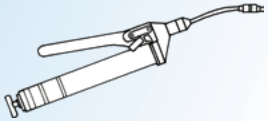



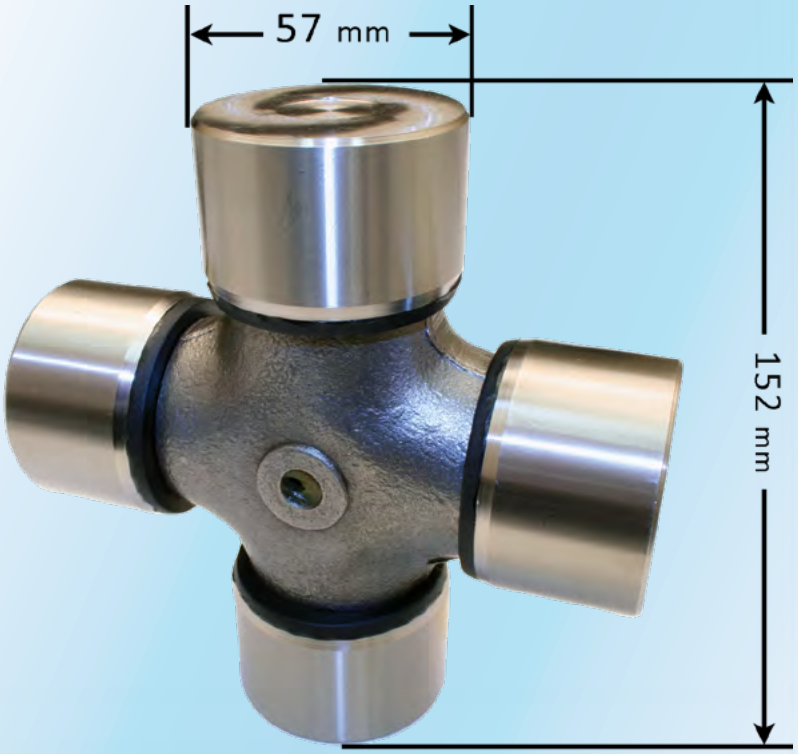

kg 4,46

106064

Universal joint kit, lubricated

L-series = Large

The exchange of the universal joint and its balance must always be checked in accordance with the vehicle manufacturer's instructions.

Замена крестовины карданного вала и её балансировка всегда должны проверяться в соответствии с инструкциями производителя транспортного средства.

Nivelristin vaihto ja sen tasapaino on tarkistettava aina ajoneuvon valmistajan ohjeiden mukaisesti.

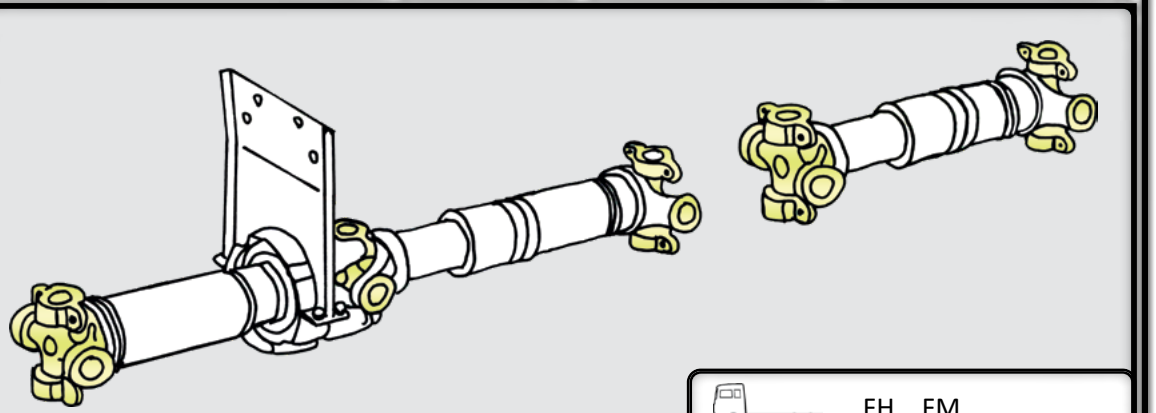

FH, FM

VoR

1068253
23420767
1651237

Renault R

50 00 295 260
50 00 803 045
50 00 819 298
50 01 831 553

Iveco R **4253 3785**

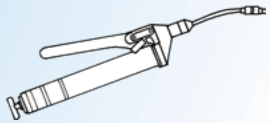





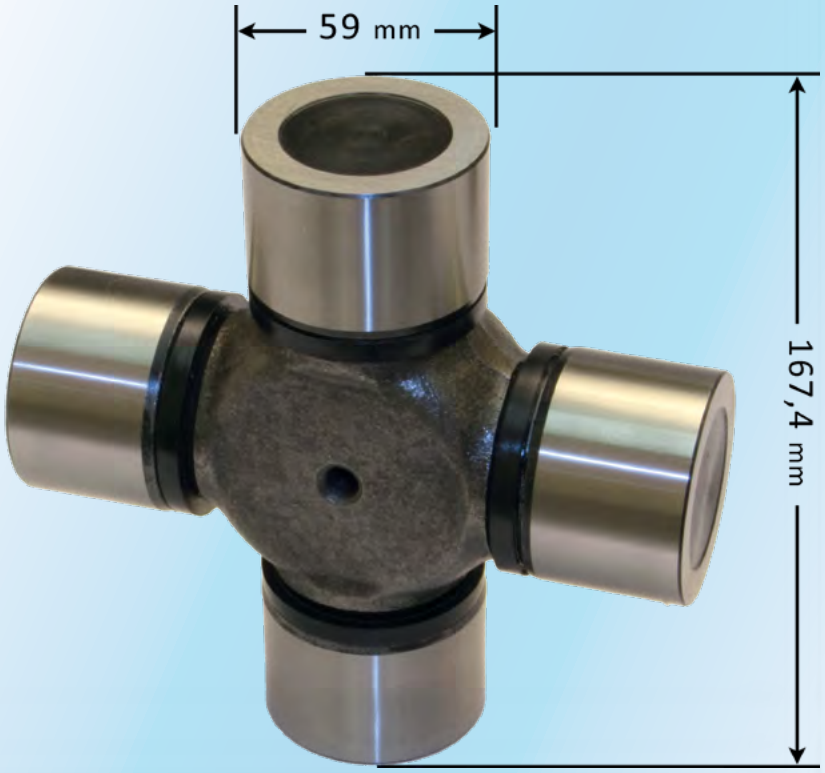

kg 5,38

107056

King pin kit

VoR **20751021**

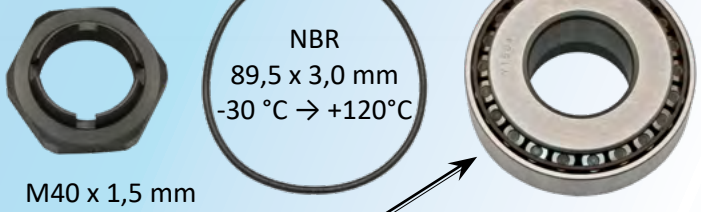

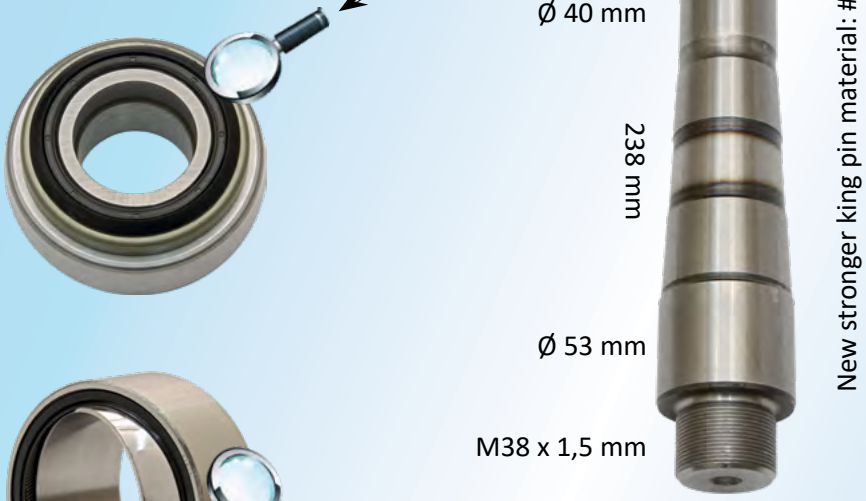

Integrated seal at other side of bearing →

Spherical plain bearing → SKF BLR-0263

Improved bearing with a special lip seal.

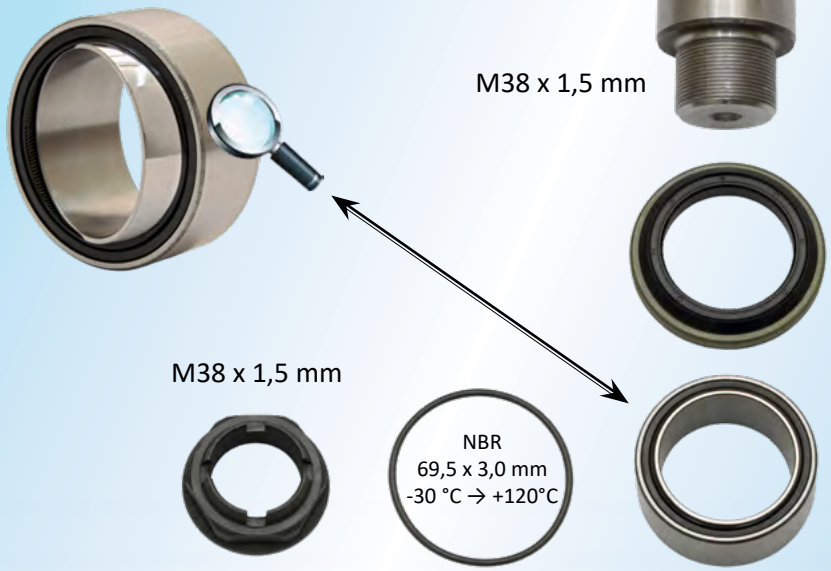

kg 5,0

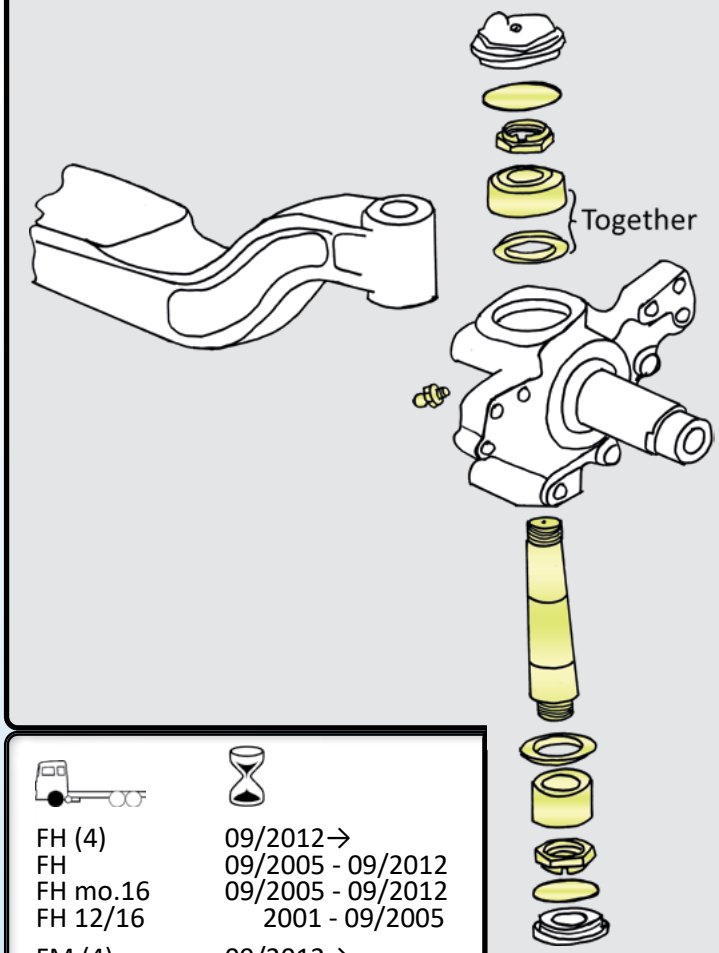

FH (4)	09/2012→
FH	09/2005 - 09/2012
FH mo.16	09/2005 - 09/2012
FH 12/16	2001 - 09/2005
FM (4)	09/2012→
FM	09/2005 - 09/2012
FM 9/12	09/2003 - 09/2005
FM 7/10/12	1998 - 09/2003
FE (3)	
FL 6	B265000→

B5 LH/RH, B5TL (3), B6R, B7R, B7LE R7, B9 L/R/S, B9TL, B11R, B11R (3), B12B/M/R, B13R

109200

VoR 943491

Nut of wheel hub

UNF 7/8" - 14 / 10.9

33 mm

625 Nm (64 kpm)

kg 0,19

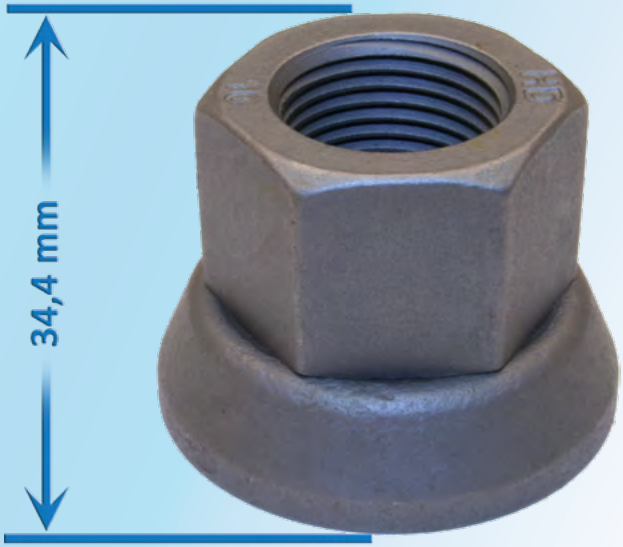

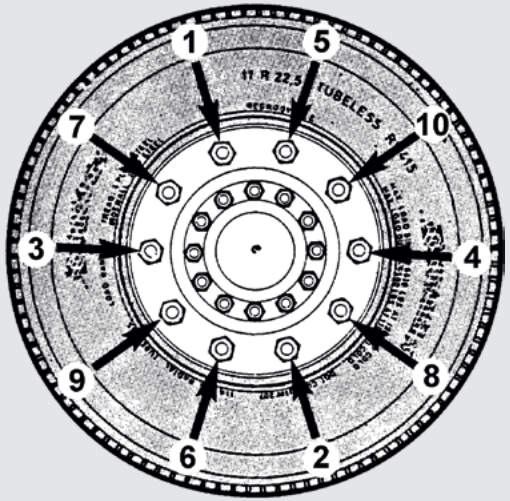

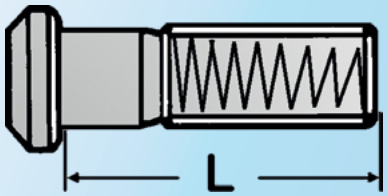

UNF

7/8" - 14 / 10.9

109201

VoR 1573081

Stud of wheel hub



kg 0,42

109202

VoR 1573082

Stud of wheel hub



kg 0,47

109204

VoR 8152104 1589009

Stud of wheel hub



kg 0,53

109220

VoR 20552688 | 33 mm | M22 x 1,5 mm

Nut of wheel hub for aluminium wheels



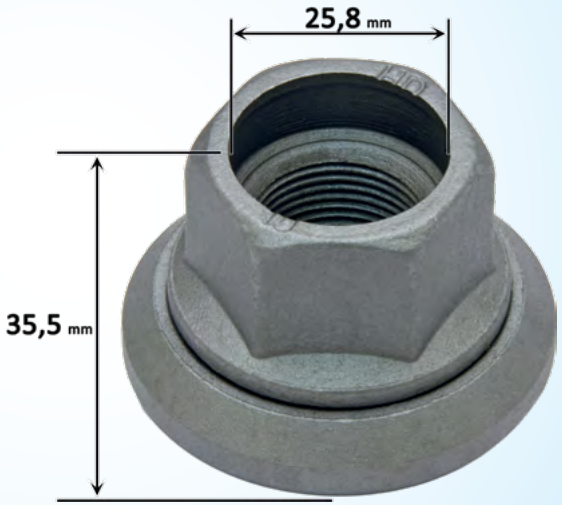

kg 0,2

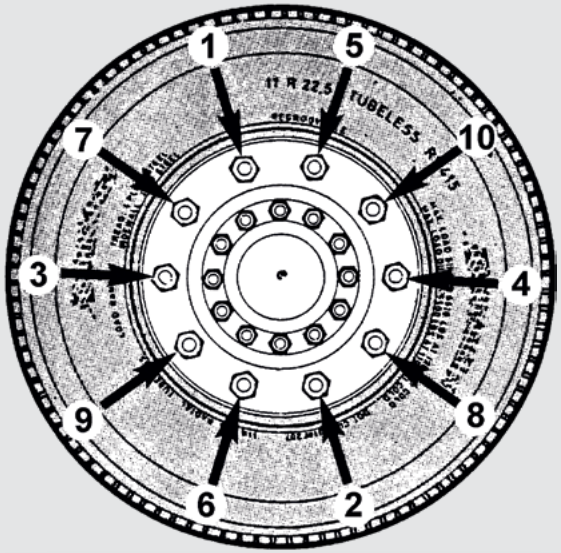

609200

32 mm | M22 x 1,5 mm

Nut of wheel hub

VoR	947972
MBR	385 400 0124
MBR	617 400 0024
MBR	620 400 0024
MBR	000 401 0672
ManR	81.45503.0049
ManR	81.45503.0026
Iveco R	0445 9603
Iveco R	0206 4102
DAF R	0620 652
DAF R	0206 4102
BPW	02.5219.27.10
BPW	02.4219.22.10
BPW	05.2605.40.90
SAF	4 247 3012 00

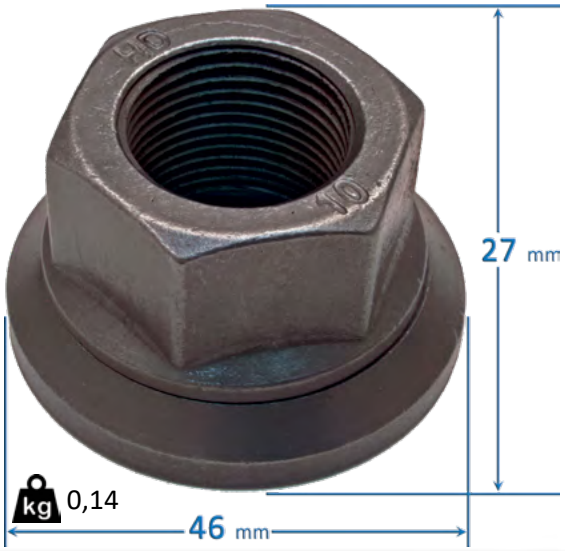

kg 0,14

109210

33 mm 625 Nm (64 kpm)

Nut of wheel hub

M22 x 1,5 mm

VoR

21303956
20551045
21402076 ?

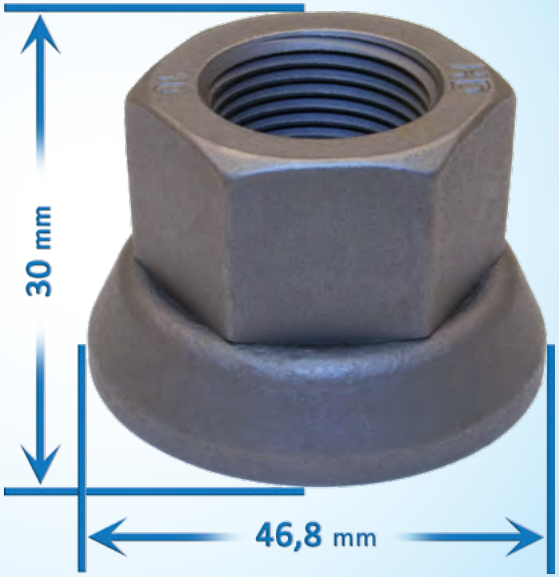

kg 0,18

109211
VoR 20515514

Stud of wheel hub



kg 0,33 kg

109212
VoR 20515515

Stud of wheel hub



kg 0,36 kg

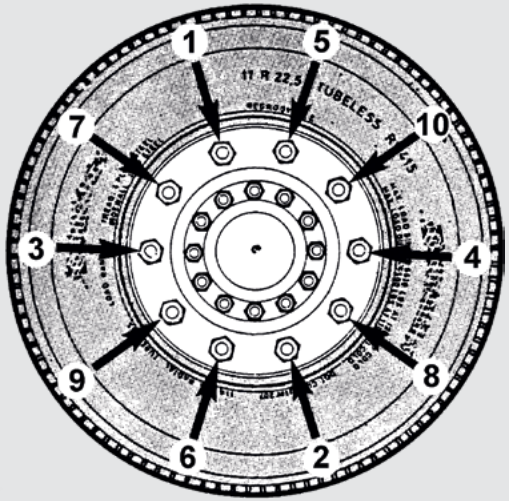

109213
VoR 20515516

Stud of wheel hub

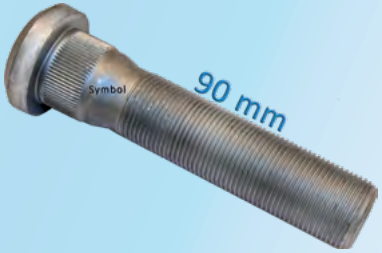

kg 0,35 kg

109214
VoR 20515517

Stud of wheel hub

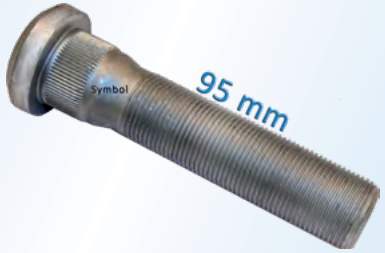

kg 0,38 kg

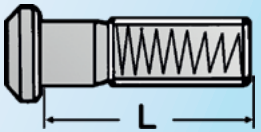



M22 x 1,5 mm

109215
VoR 20515518

Stud of wheel hub

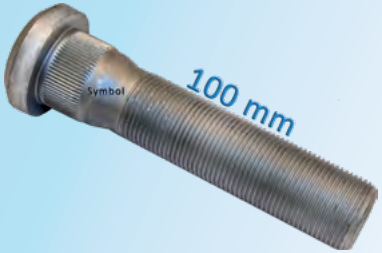

kg 0,37 kg

109216
VoR 20515519

Stud of wheel hub



kg 0,41 kg

109229
VoR 20585640

Stud of wheel hub



kg 0,3 kg

109217
VoR 21147687
20524942

Stud of wheel hub



kg 0,47 kg

109218
VoR 20553560

Stud of wheel hub



kg 0,43 kg

109219
VoR 20553561

Stud of wheel hub



kg 0,45 kg

HD - Creation

Complete repair kit for Z - cam brakes:

110050

Same kit suits for either Left **or** Right side

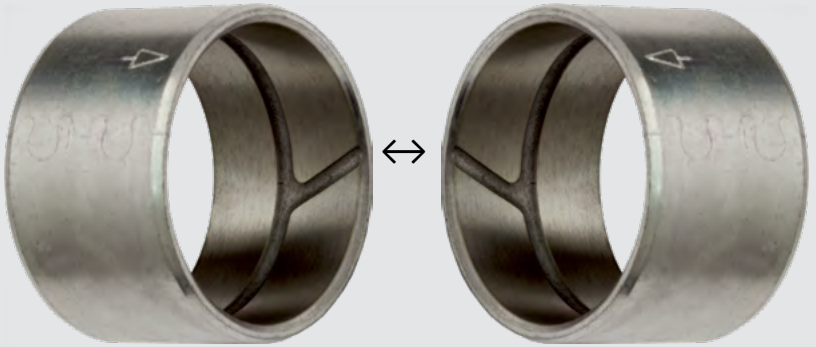

HD 110006
VoR 1088812
VoR 1606179

Outer grooves have to be installed inwards so the grease can enter into the bushing.

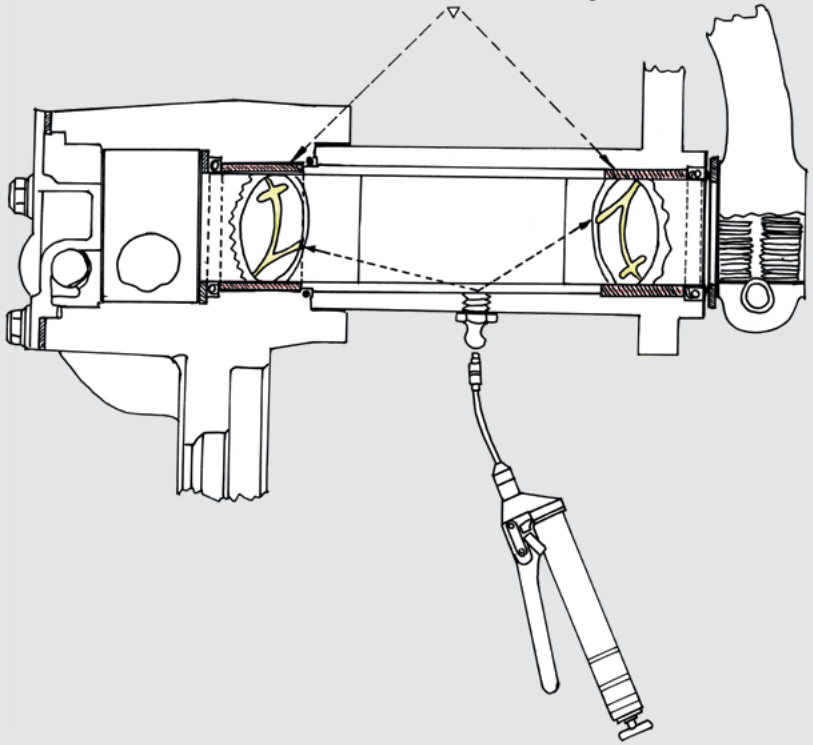

All kit parts must be replaced at once.

HD parts functioning is tested on a test bench.

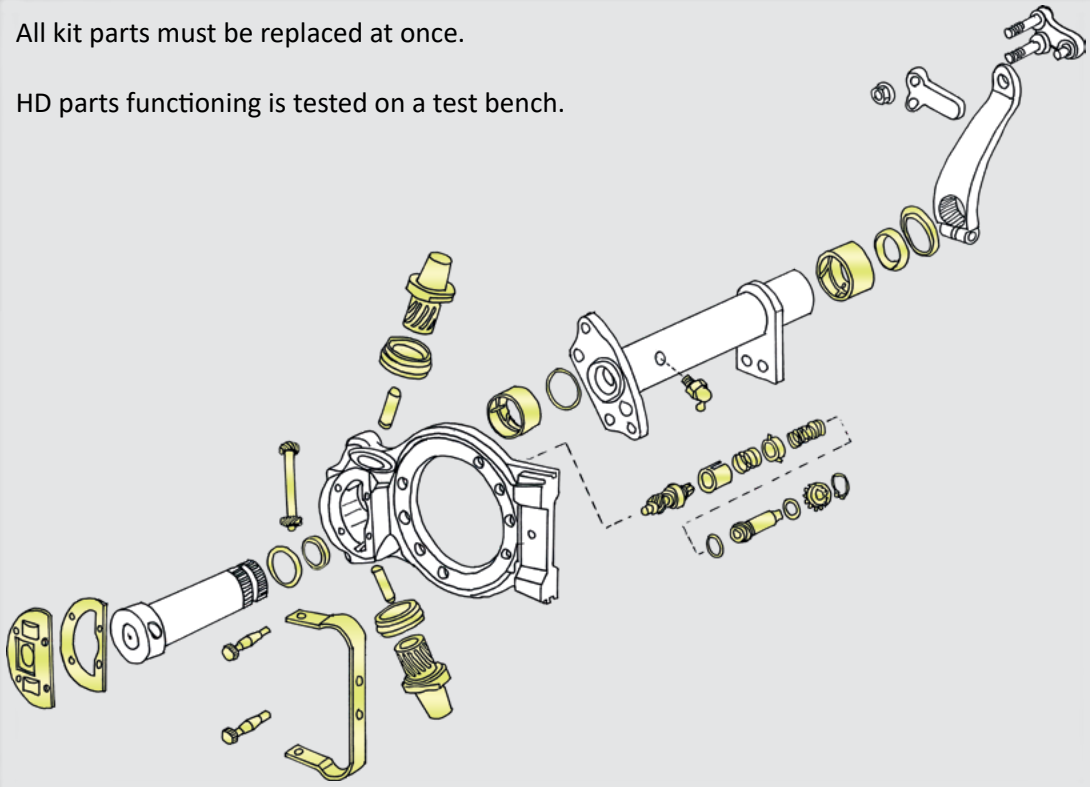

110050

Complete repair kit for Z - cam brakes → left **or** right side

VoR

This kit is HD´s own creation.

No reference number available.



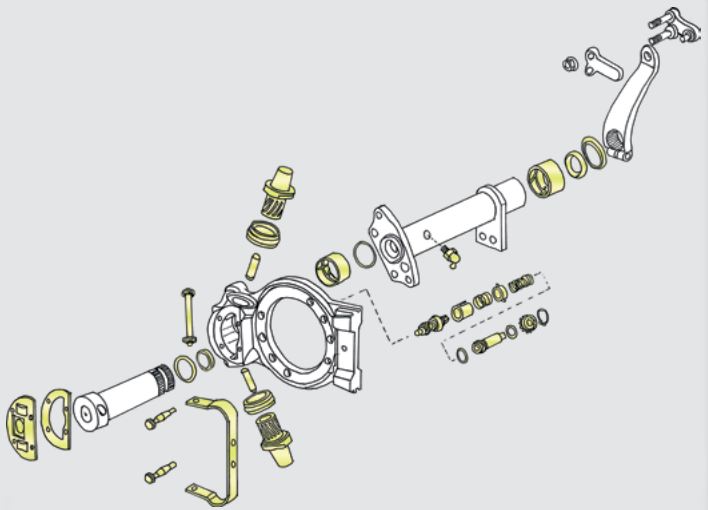

FH (4) 09/2012→
FH 09/2005 - 09/2012
FH 12/16 1993 - 09/2005

FM (4) 09/2012→
FM 09/2005 - 09/2012
FM 9/12 01/2002 - 09/2005
FM 7/10/12 1998 - 01/2002

F 7/10/12
FL 7/10/12
FL 6

B10, B12 with drum / Z - cam brakes

kg 3,72

This kit suits Left **or** Right side.
You need two kits to repair both sides.

1 /

110042

Automatic adjust pinion kit

kg 0,3

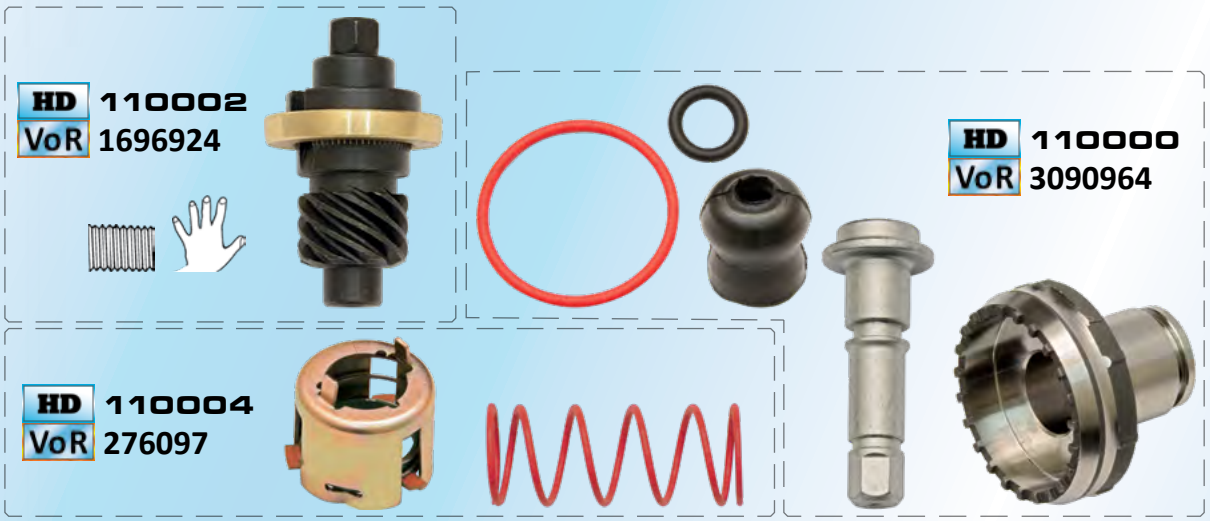

110043

Automatic adjust pinion kit

kg 0,3

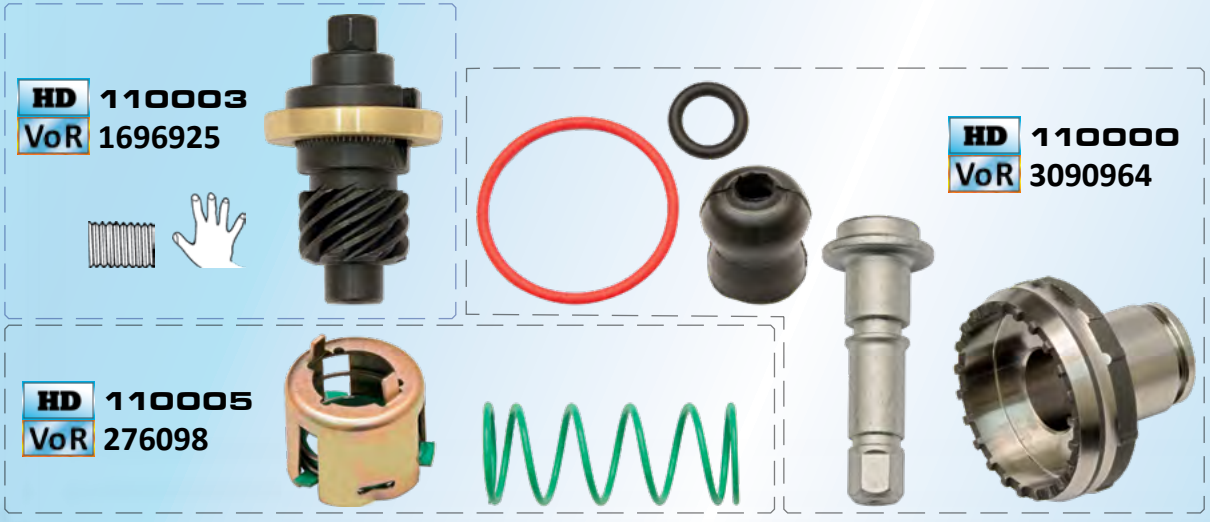

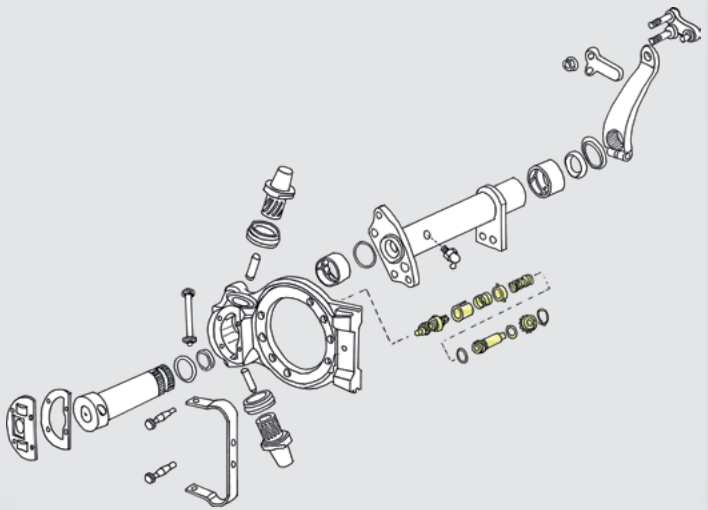

FH (4)	09/2012→
FH	09/2005 - 09/2012
FH 12/16	1993 - 09/2005
FM (4)	09/2012→
FM	09/2005 - 09/2012
FM 9/12	01/2002 - 09/2005
FM 7/10/12	1998 - 01/2002
F 7/10/12	
FL 7/10/12	
FL 6	

B10, B12 with drum / Z - cam brakes

110044

Lifting kit → Z-cam brakes



HD 110014
VoR 8550978

HD 110010
VoR 3090954

HD 110007
VoR 1696446

kg 0,87

110045

Lifting kit → Z-cam brakes



HD 110015
VoR 8550977

HD 110010
VoR 3090954

HD 110007
VoR 1696446

kg 0,89

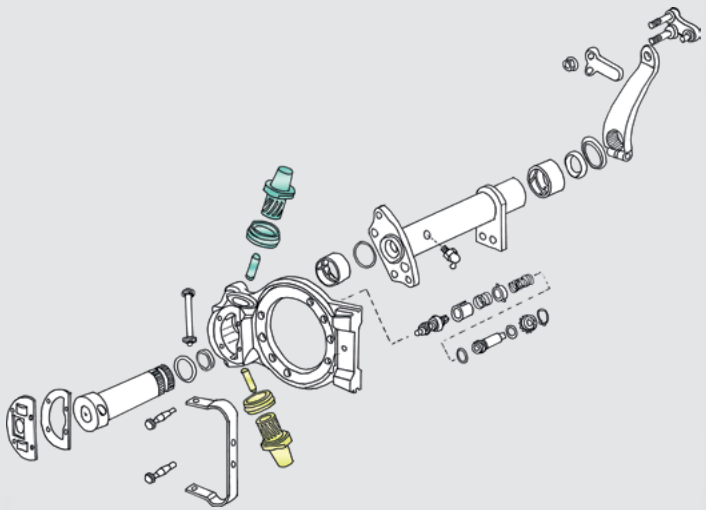

FH (4)	09/2012→
FH	09/2005 - 09/2012
FH 12/16	1993 - 09/2005
FM (4)	09/2012→
FM	09/2005 - 09/2012
FM 9/12	01/2002 - 09/2005
FM 7/10/12	1998 - 01/2002
F 7/10/12	
FL 7/10/12	
FL 6	

B10, B12 with drum / Z - cam brakes

110048

Partial repair kit for Z - cam brakes



VoR

This kit is HD´s own creation.
No reference number available.

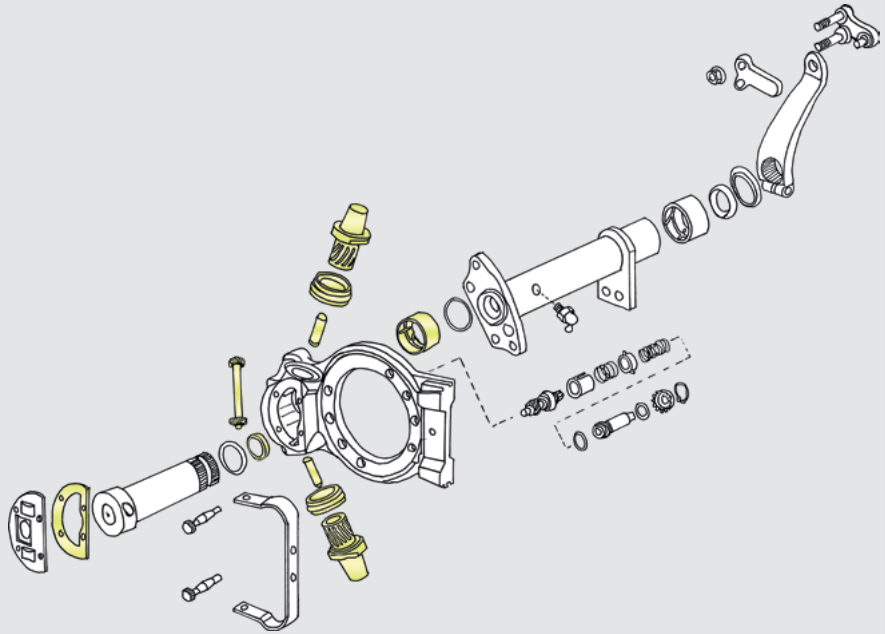

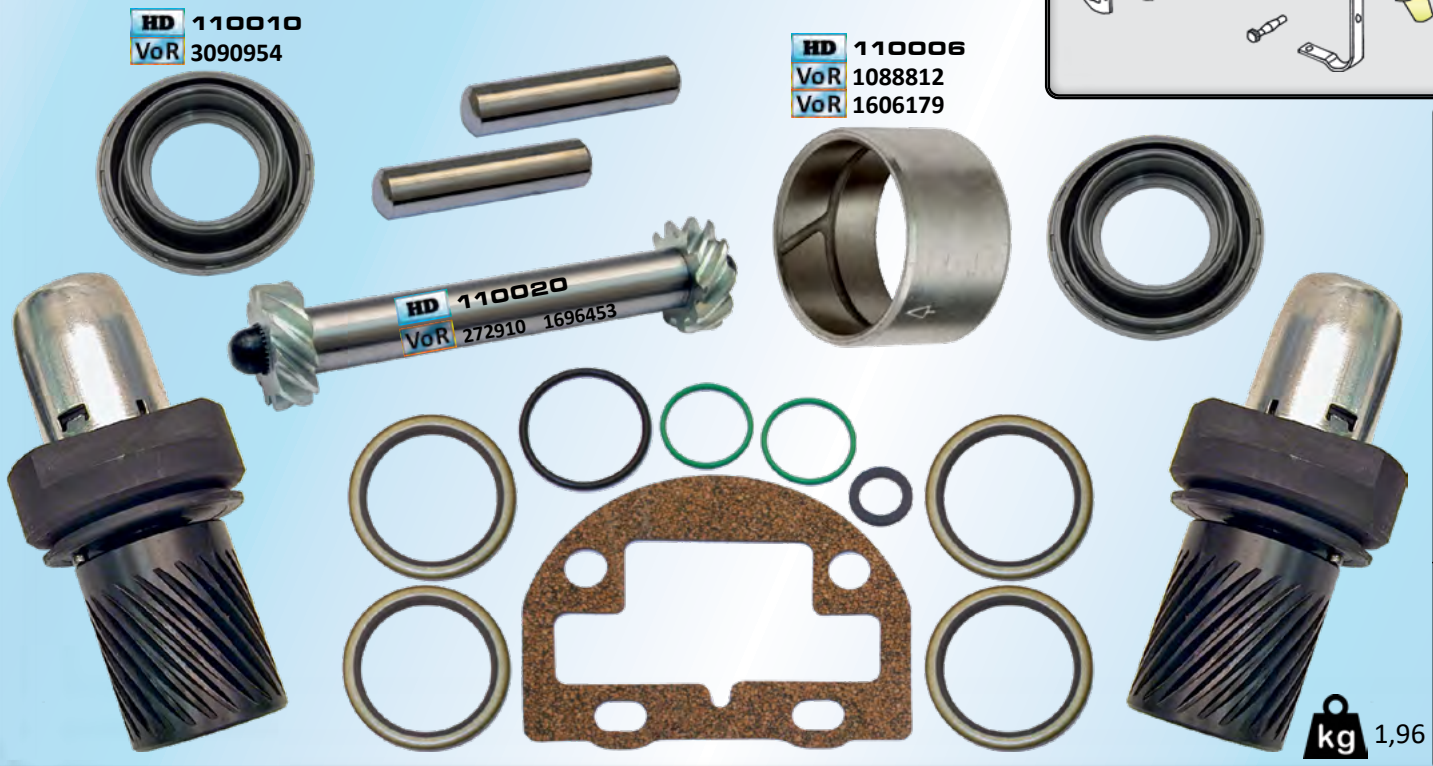

kg 1,96

FH (4)	09/2012→
FH	09/2005 - 09/2012
FH 12/16	1993 - 09/2005
FM (4)	09/2012→
FM	09/2005 - 09/2012
FM 9/12	01/2002 - 09/2005
FM 7/10/12	1998 - 01/2002
F 7/10/12	
FL 7/10/12	
FL 6	

B10, B12 with drum / Z - cam brakes

110006

Bushing → Z-cam brakes

VoR

1088812
1606179



Material:
CuPb10Sn10/SPHC
Alloy layer 0,3 mm

Outside diameter:
Ø 43,0 mm
+0,10 / +0,07 mm

Inside diameter:
Ø 38,2 mm

Width:
26,0 mm +0 / +0,3 mm

kg 0,06

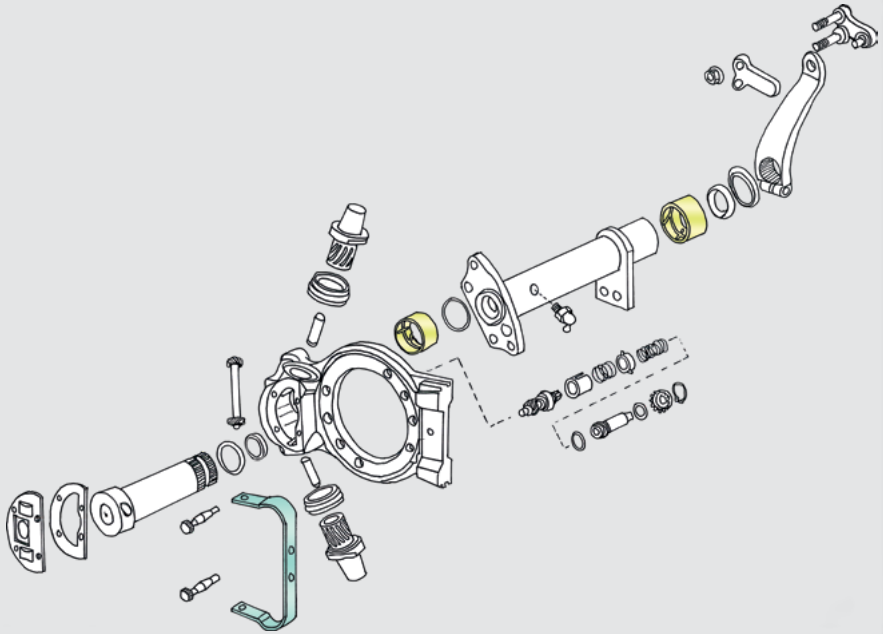

110025

Return spring

VoR

3097092
1696444



Width: 25,5 mm
Thickness: 6,3 - 6,5 mm
Length: 224 mm +/- 4 mm

kg 0,74

FH (4) 09/2012→
FH 09/2005 - 09/2012
FH 12/16 1993 - 09/2005

FM (4) 09/2012→
FM 09/2005 - 09/2012
FM 9/12 01/2002 - 09/2005
FM 7/10/12 1998 - 01/2002

F 7/10/12
FL 7/10/12
FL 6

B10, B12 with drum / Z - cam brakes

110010

Boot

VoR

3090954
1696448



Material:
Silicon rubber -40°C → +140°C
Metal ring

kg 0,02

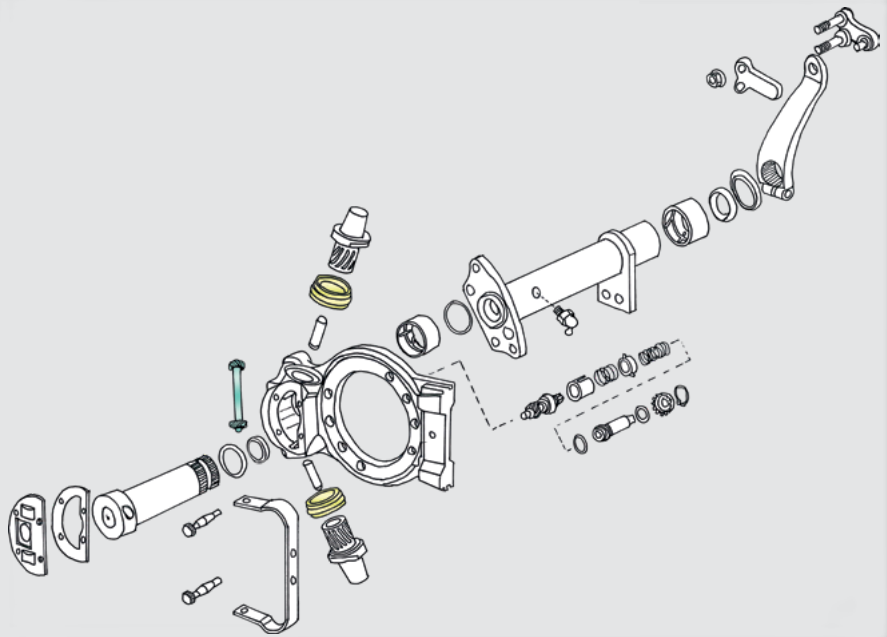

110020

Cross shaft

VoR

272910
1696453

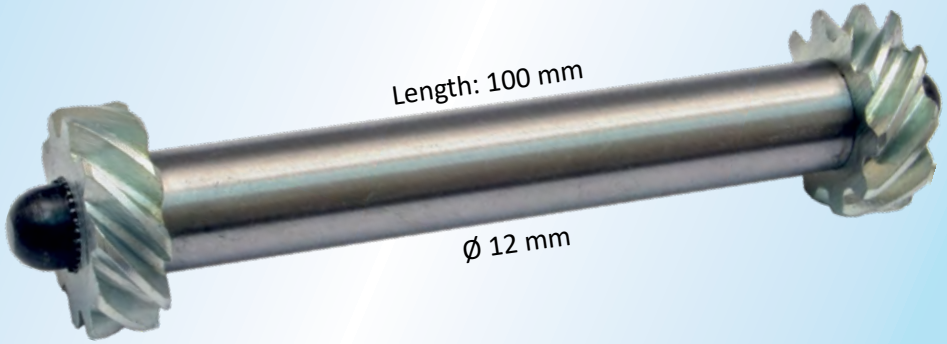

Ø 22,3 mm

kg 0,11

FH (4)	09/2012→
FH	09/2005 - 09/2012
FH 12/16	1993 - 09/2005
FM (4)	09/2012→
FM	09/2005 - 09/2012
FM 9/12	01/2002 - 09/2005
FM 7/10/12	1998 - 01/2002
F 7/10/12	
FL 7/10/12	
FL 6	

B10, B12 with drum / Z - cam brakes

110240

Retainer + casing cover → ABS sensor



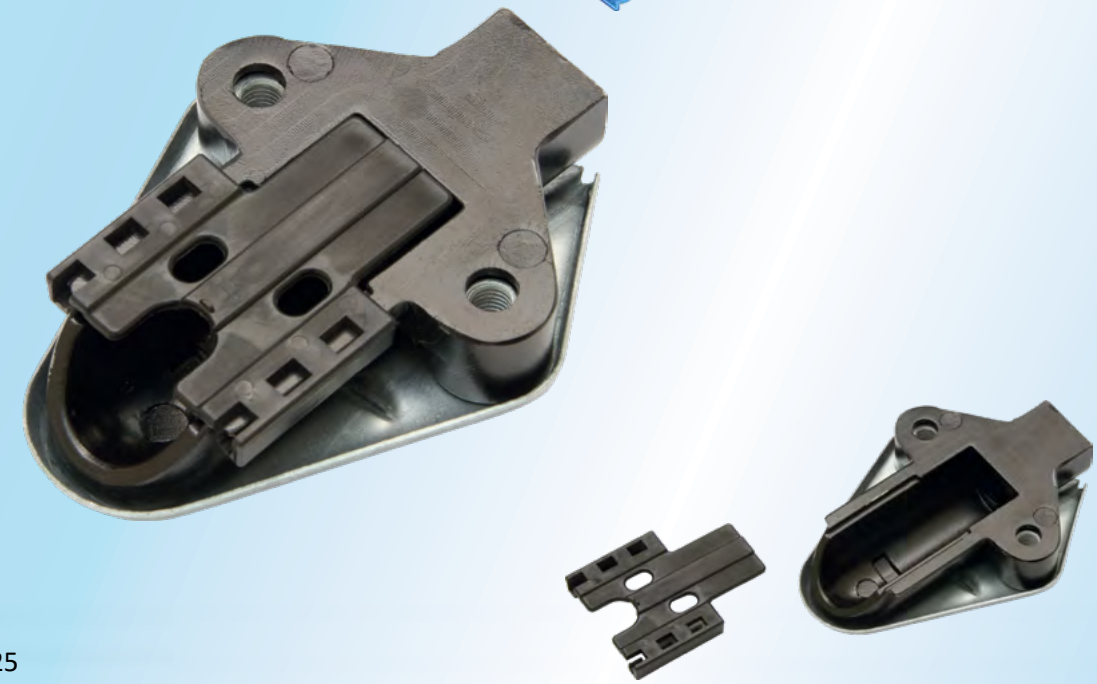

VoR

20726986
3987422

3171585

Renault R **7420726986**

kg 0,25

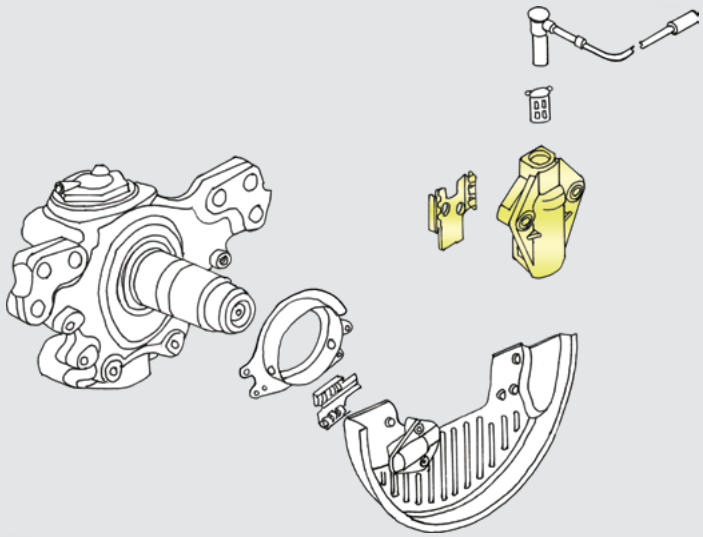

FH (4)	09/2012→
FH	09/2005 - 09/2012
FH 12/16	09/2003 - 09/2005
FM (4)	09/2012→
FM	09/2005 - 09/2012
FM 9/12	09/2003 - 09/2005
FM 7/10/12	2001 - 09/2003
FL 6	
FE	
FE (3)	

B6R
B7R

110224

Brake shield

VoR

24425046
20409631
20383323
20383321

Material:
Painted steel

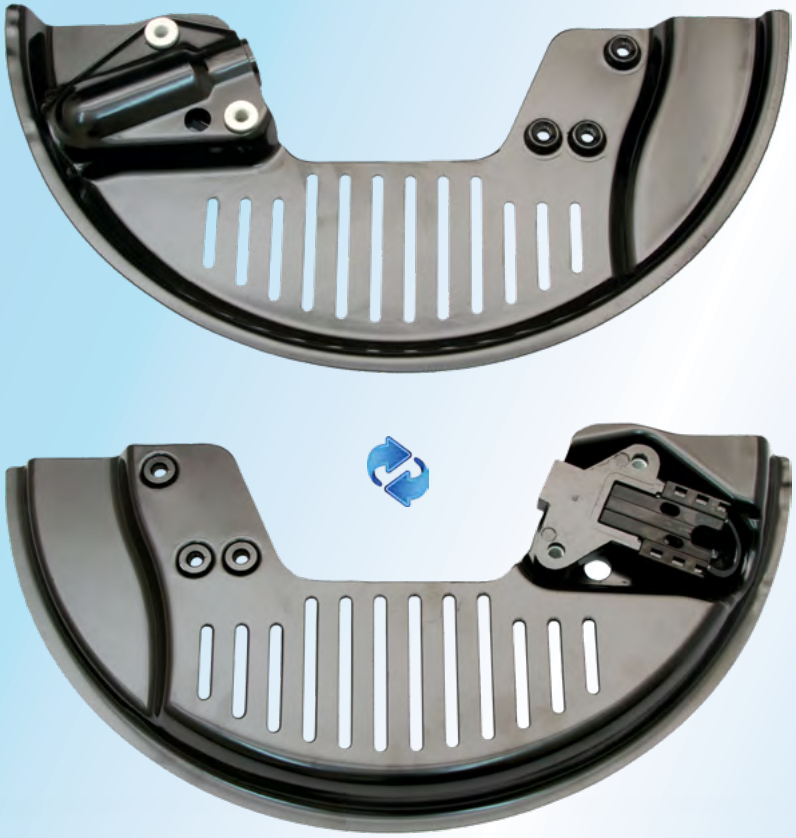

kg 1,0

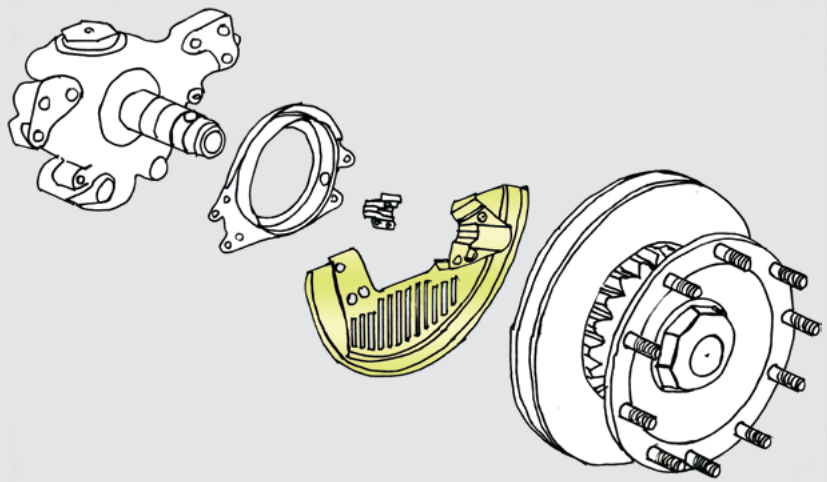

FH (4)	09/2012→	
FH	09/2005 - 09/2012	
FH 12/16	09/2003 - 09/2005	
FM (4)	09/2012→	
FM	09/2005 - 09/2012	
FM 9/12	09/2003 - 09/2005	

Front axle
Forward front axle
Rear front axle
Pusher axle
Tag axle
Trailing axle

The other side brake shield is: HD 110225

110225

Brake shield

VoR

24425045
20409630
20383322
20383320

Material:
Painted steel

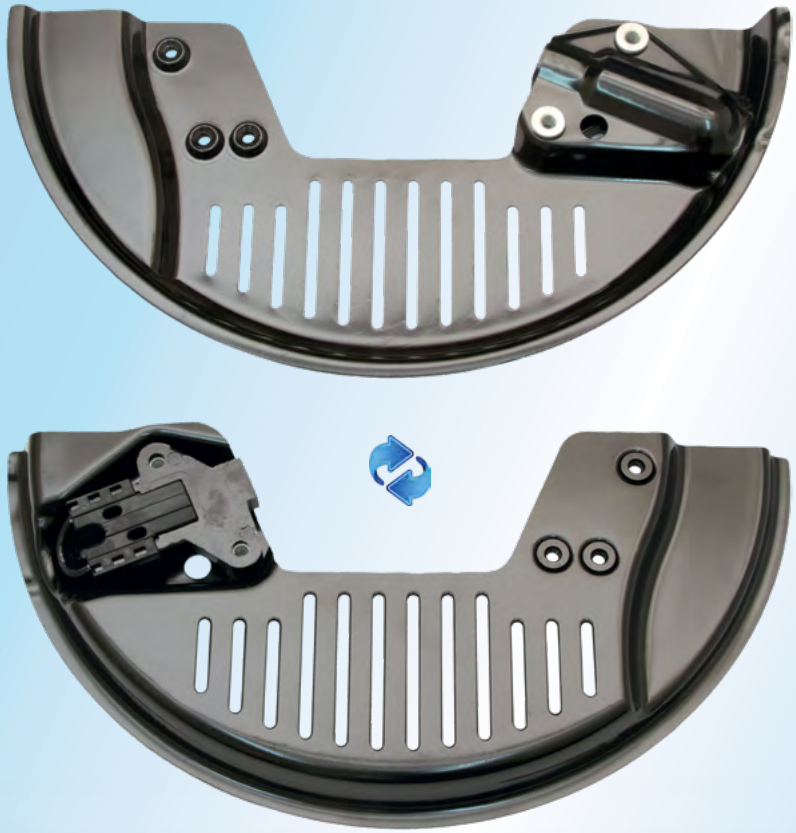

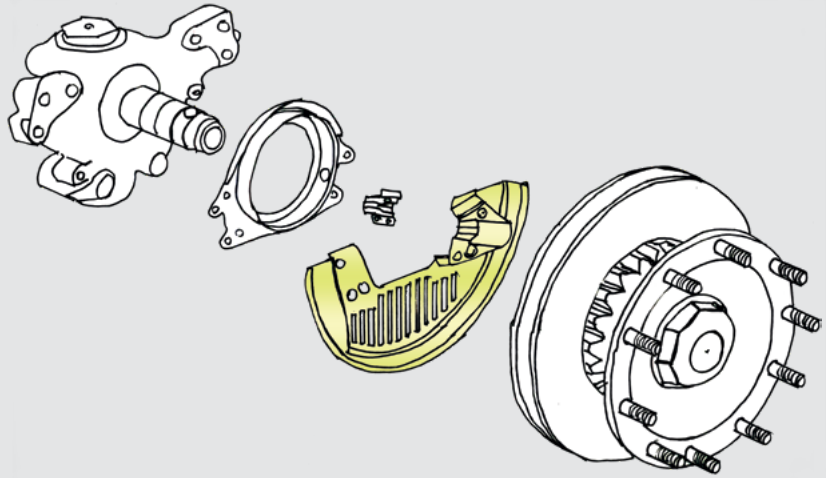

Or

FH (4)	09/2012→
FH	09/2005 - 09/2012
FH 12/16	09/2003 - 09/2005
FM (4)	09/2012→
FM	09/2005 - 09/2012
FM 9/12	09/2003 - 09/2005

Front axle
Forward front axle
Rear front axle
Pusher axle
Tag axle
Trailing axle

kg 1,0

The other side brake shield is: HD 110224

110226

Brake shield

VoR

24425044
20383326
20383323
20383321

Material:
Painted steel

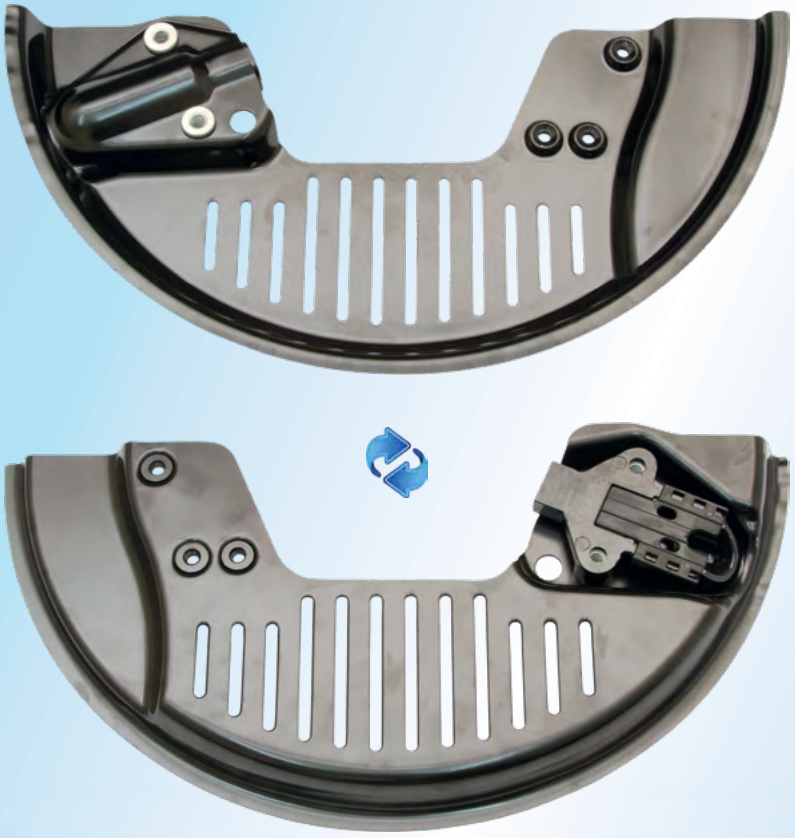

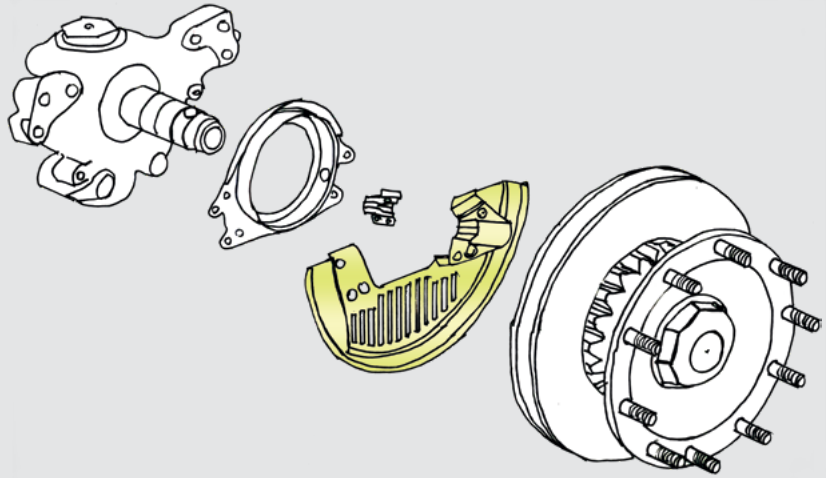

FH/FM (4)	09/2012→
FH/FM	09/2005 - 09/2012
FH 12/16	09/2003 - 09/2005
FM 9/12	09/2003 - 09/2005

Front axle
Forward front axle
Rear front axle
Pusher axle
Tag axle
Trailing axle

B5RH, B5TL(3), B6R, B7R, B7LE, B8R(3), B9L/R/S/TL
B9TL, B11R(3), B12B/M/R, B13R, BXRC

kg 1,0

The other side brake shield is: HD 110227

110227

Brake shield

VoR

24425043
20383325
20383322
20383320

Material:
Painted steel

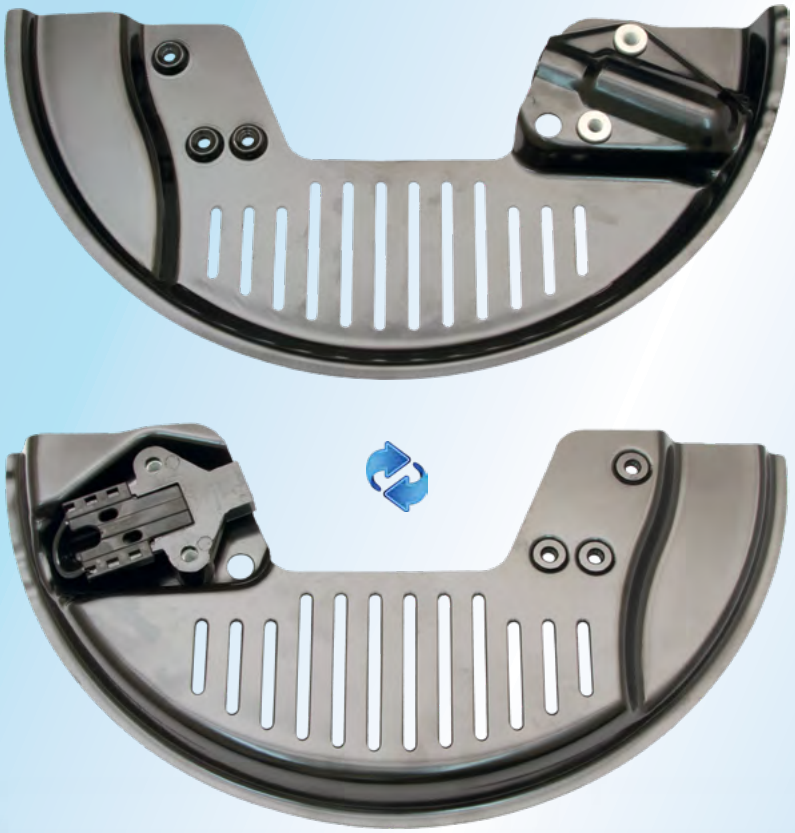

kg 1,0

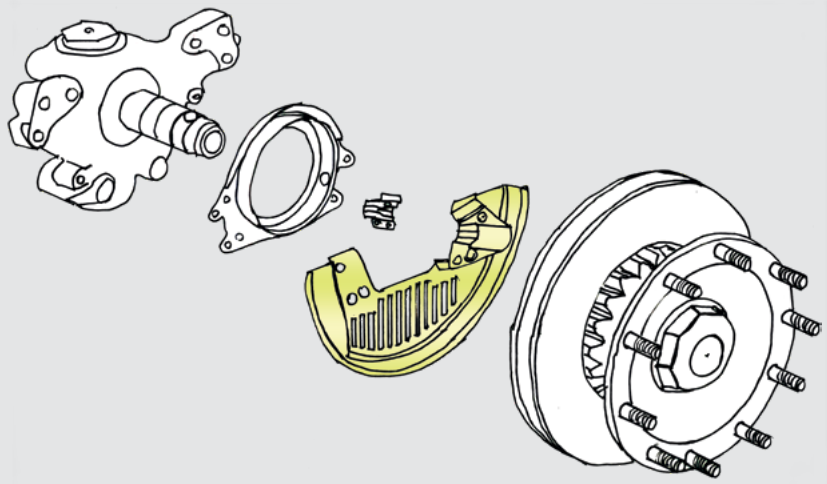

FH/FM (4)	09/2012→
FH/FM	09/2005 - 09/2012
FH 12/16	09/2003 - 09/2005
FM 9/12	09/2003 - 09/2005

Front axle
Forward front axle
Rear front axle
Pusher axle
Tag axle
Trailing axle

B5RH, B5TL(3), B6R, B7R, B7LE, B8R(3), B9L/R/S/TL
B9TL, B11R(3), B12B/M/R, B13R, BXRC

The other side brake shield is: HD 110226

110230

Brake shield

VoR **20374213**

Material: Painted steel



kg 0,83

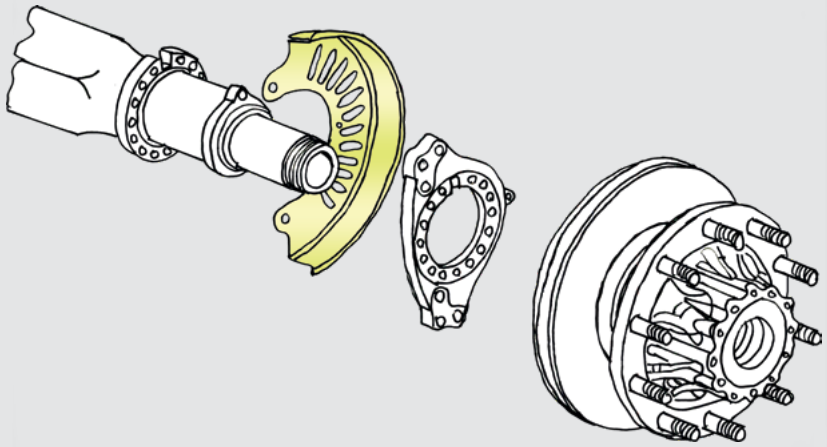

FH (4)	09/2012→
FH	09/2005 - 09/2012
FH 12/16	09/2003 - 09/2005
FM (4)	09/2012→
FM	09/2005 - 09/2012
FM 9/12	09/2003 - 09/2005

Rear axle
Forward rear axle
Middle rear axle
Rear rear axle
Trailing axle

110231

Brake shield

VoR **20374214**

Material: Painted steel



kg 0,98

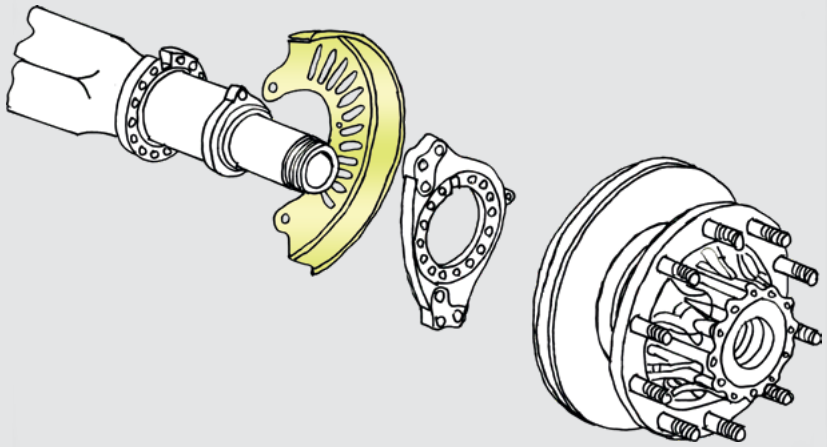

FH (4)	09/2012→
FH	09/2005 - 09/2012
FH 12/16	09/2003 - 09/2005
FM (4)	09/2012→
FM	09/2005 - 09/2012
FM 9/12	09/2003 - 09/2005

Rear axle
Forward rear axle
Middle rear axle
Rear rear axle
Trailing axle

110228

Brake shield

VoR 21164287

Material: Painted steel



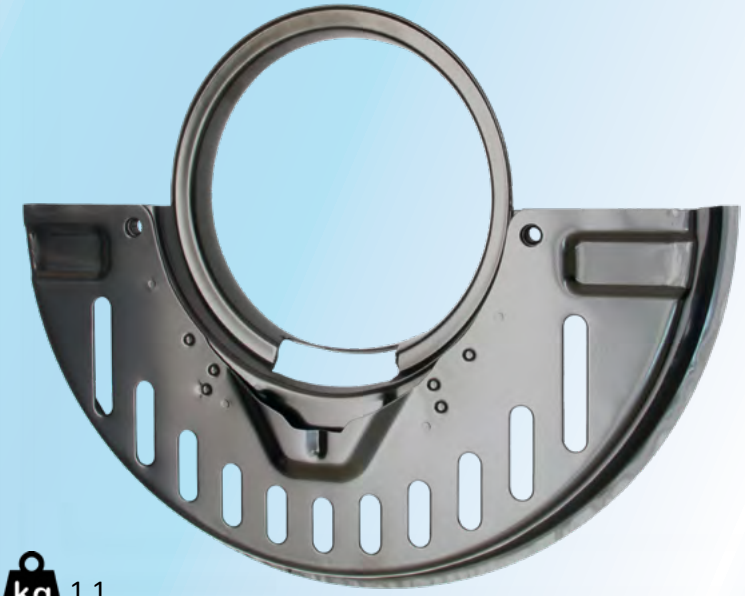

kg 1,1

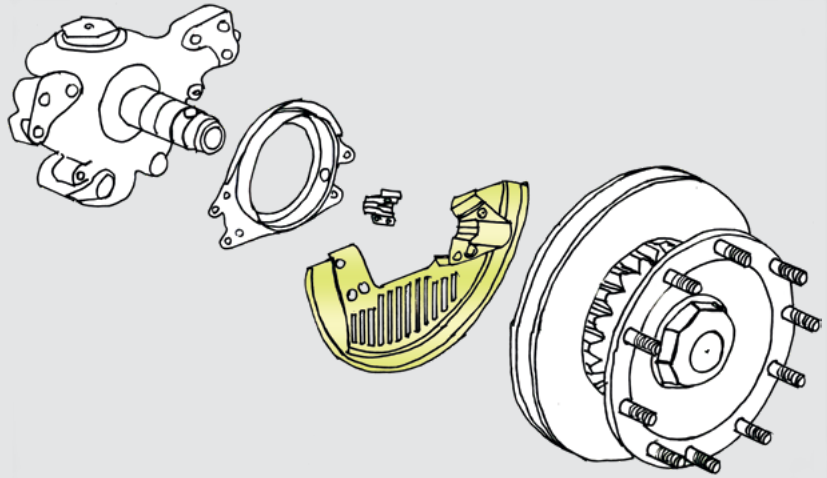

FH (4)	09/2012→
FM (4)	09/2012→

Front axle
Forward front axle
Rear front axle
Rear rear axle
Pusher axle
Tag axle

110235

Deflector

VoR 20829504





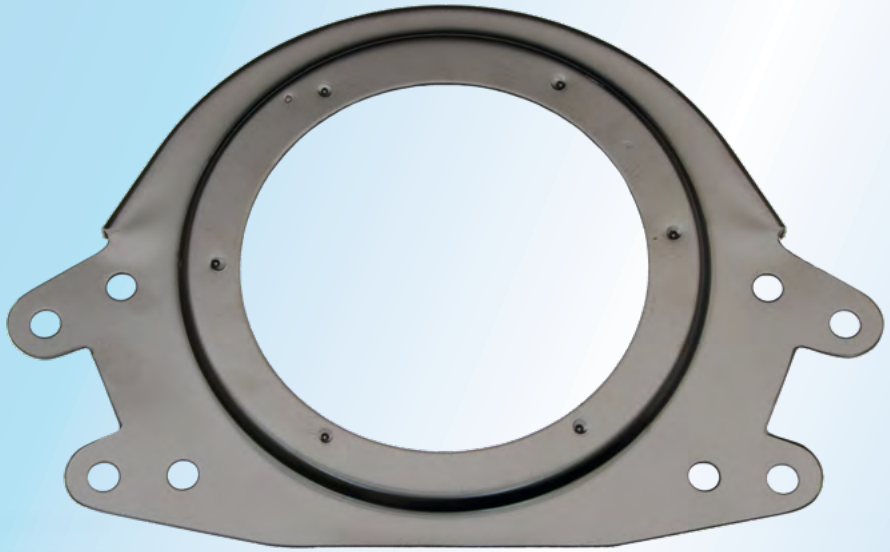

Material: Painted steel

kg 0,6

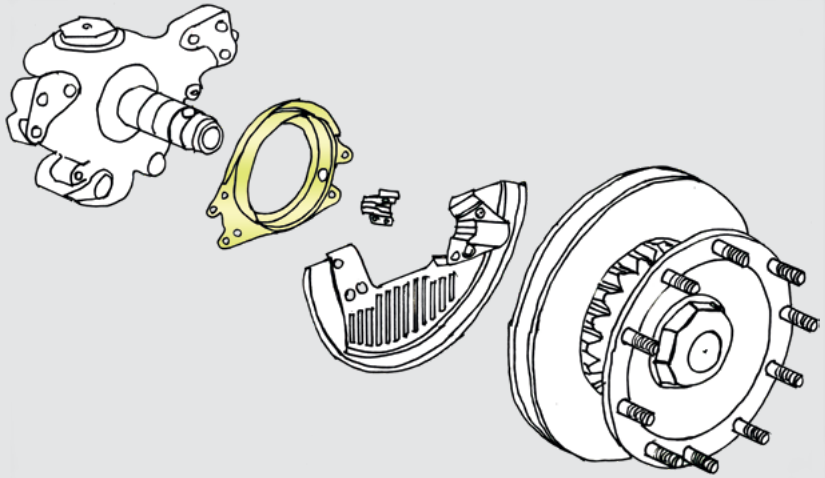

FH/FM (4)	09/2012→
FH/FM	09/2005 - 09/2012
FH 12/16	09/2003 - 09/2005
FM 9/12	09/2003 - 09/2005

B5, B6, B7, B8, B9, B11, B12, B13
BXRC

Front axle
Forward front axle
Rear front axle
Pusher axle
Tag axle
Trailing axle

110412

Sensor wheel

VoR 20392016

Outer Ø 146 mm
Inner Ø 132 mm
Width: 12,1 mm
Thickness without teeth: 4,1 mm
Thickness with teeth: 7,1 mm

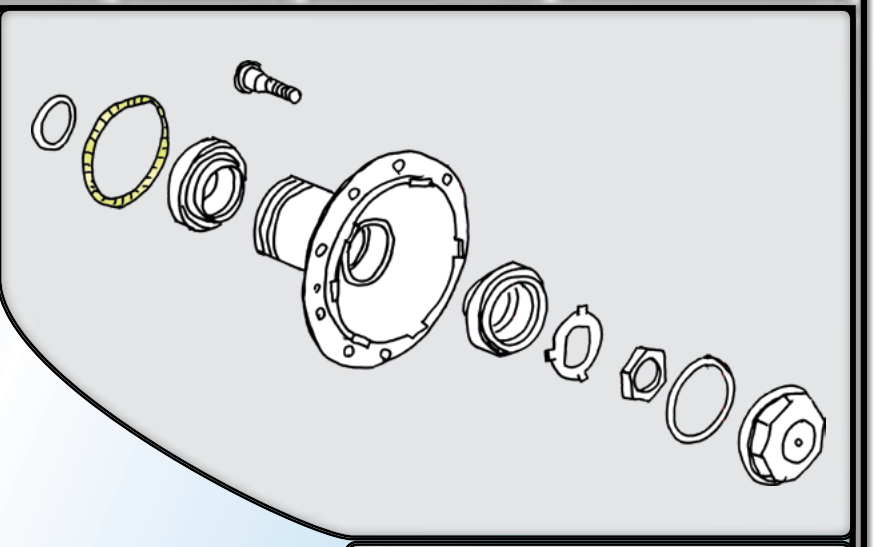

Material: Steel

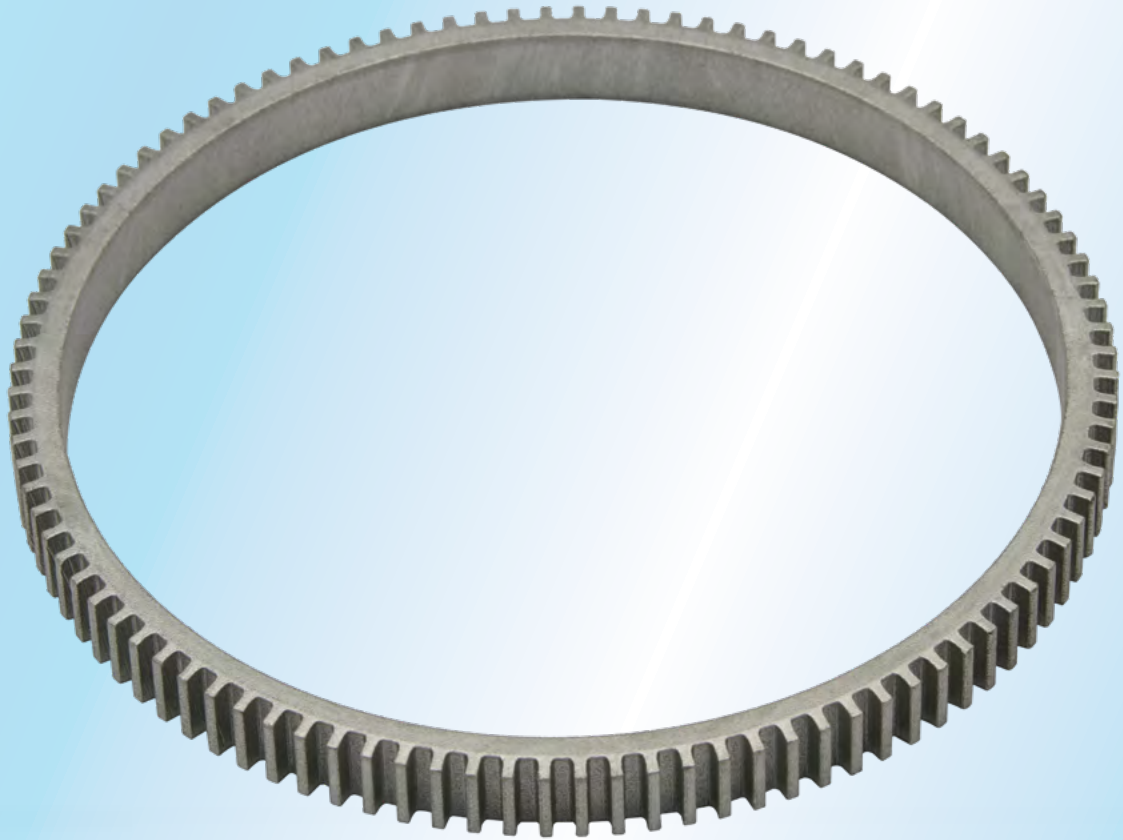

kg 0,27

FH	09/2005 - 09/2012
FH 12/16	01/2002 - 09/2005
FM	09/2005 - 09/2012
FM 9/12	01/2002 - 09/2005

110415

Sensor wheel

VoR

20424109*
1077558

*Volvo informs that 20424109 is replaced by 22537018, but they have different inner diameter.
Perhaps it also requires replacing the hub ?

Outer Ø 164 mm
Inner Ø 140 mm
Width: 12/13 mm
Thickness: 7 mm

Material: Steel

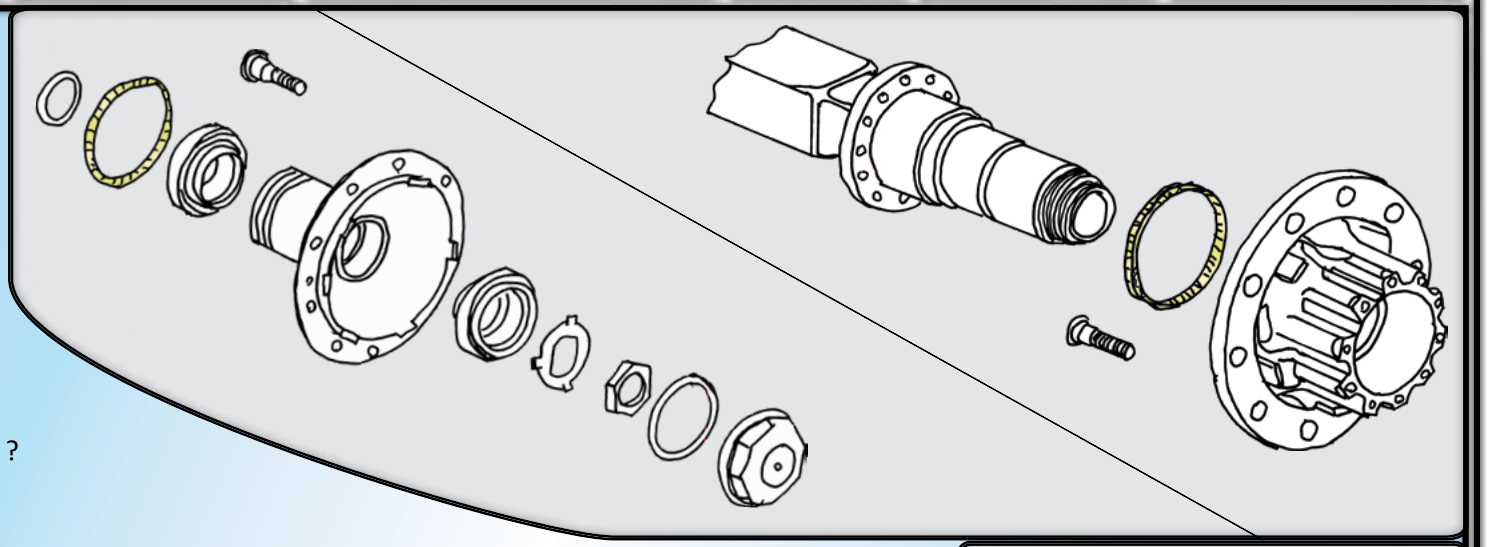

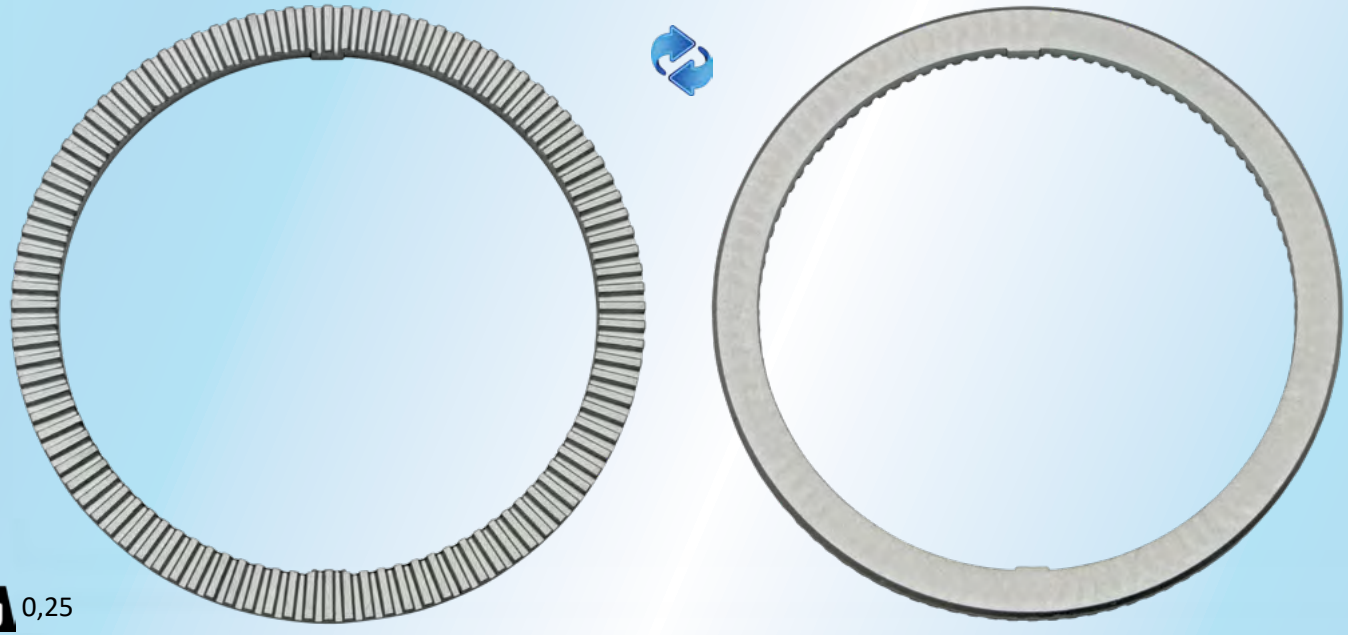

kg 0,25

FH (4)	09/2012→
FH	09/2005 - 09/2012
FH 12/16	1998 - 09/2005
FM (4)	09/2012→
FM	09/2005 - 09/2012
FM 9/12	09/2003 - 09/2005
FM 7/10/12	1998 - 09/2003



B7, B9, B12, B13



110416

Sensor wheel

VoR **22537018***

*Volvo informs that 20424109 is replaced by 22537018, but they have different inner diameter.
Perhaps it also requires replacing the hub ?

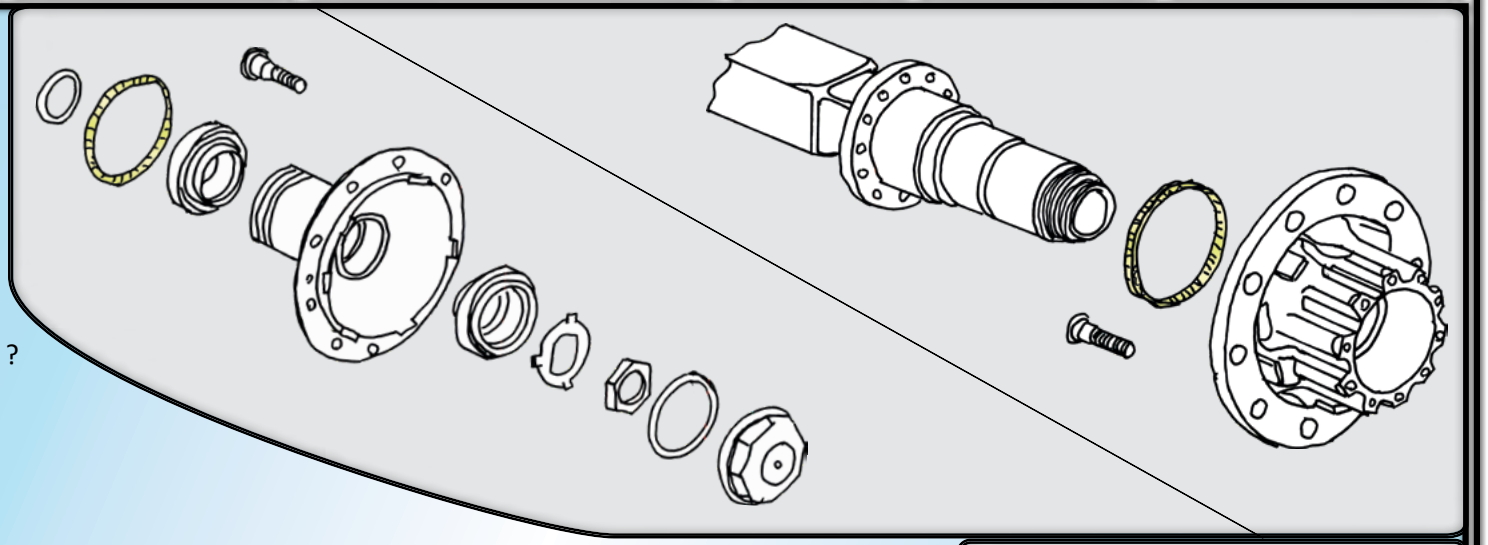

Outer Ø 164 mm
Inner Ø 136 mm
Width: 14 mm
Thickness: 8/12 mm

Material: Steel

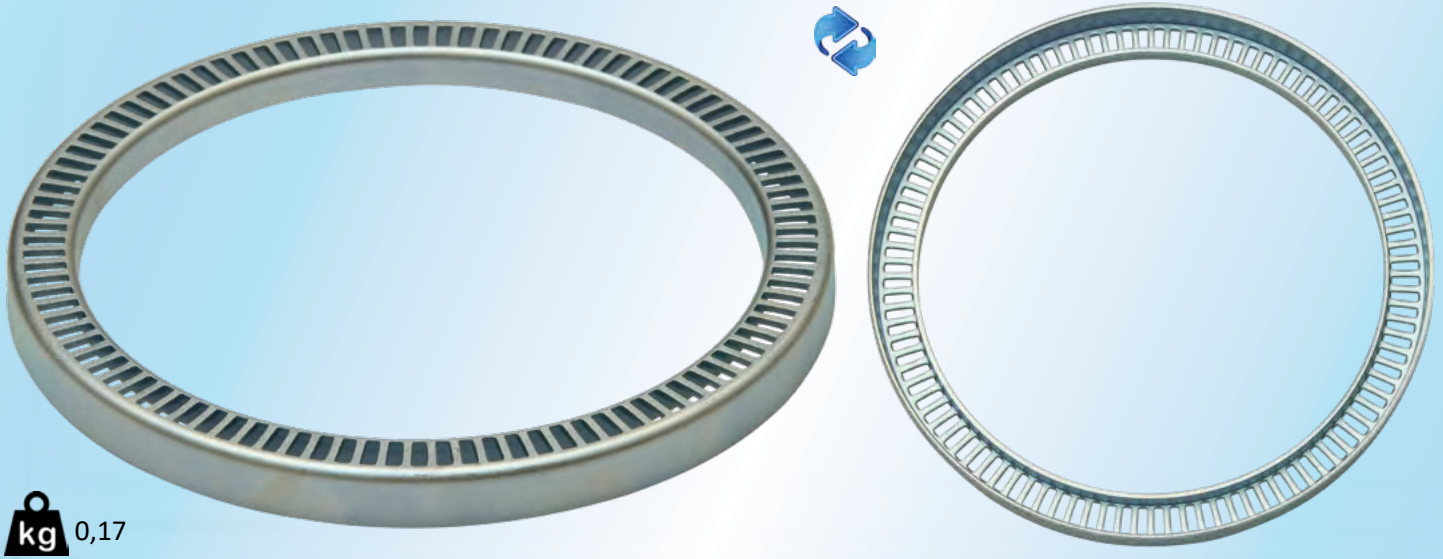

kg 0,17

FH (4)	09/2012→
FH	09/2005 - 09/2012
FM (4)	09/2012→
FM	09/2005 - 09/2012



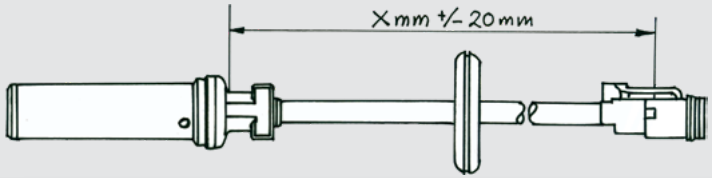

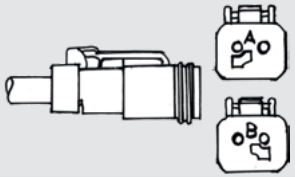

110450

ABS - sensor

VoR	OER Wabco
21247147	441 032 386 0
20528660	441 032 956 0
20528657	441 032 954 0
20528653	441 032 961 0
20509866	441 032 963 0

kg 0,27



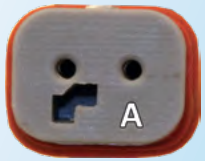



FH 13, 16
FH 12, FH 16

FM 9, 11, 13
FM 9, FM 12

B6, B7, B9, B12

110451

ABS - sensor

VoR	OER Wabco
21247154	441 032 387 0
20528661	441 032 957 0
20528658	441 032 955 0
20528654	441 032 962 0
20509865	441 032 964 0

kg 0,3







FH 13, 16
FH 12, FH 16

FM 9, 11, 13
FM 9, FM 12

B6, B7, B9, B12

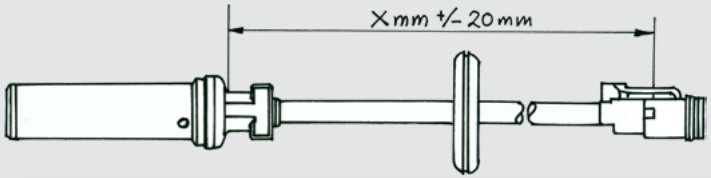

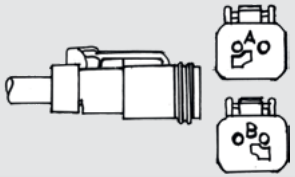

110454

ABS - sensor

VoR	OER Wabco
21247161	441 032 388 0
20554956	441 032 978 0
20509869	441 032 968 0

kg 0,28



FH 12, 13, 16
FH 12, FH 16

FM 9, 11, 12, 13
FM 9, FM 12

B6, B7, B9, B12

110455

ABS - sensor

VoR	OER Wabco
21791351	441 032 389 0
21247157	441 032 389 0
20554957	441 032 979 0
20509870	441 032 969 0

kg 0,28



FH 12, 13, 16
FH 12, FH 16

FM 9, 11, 12, 13
FM 9, FM 12

B6, B7, B9, B12

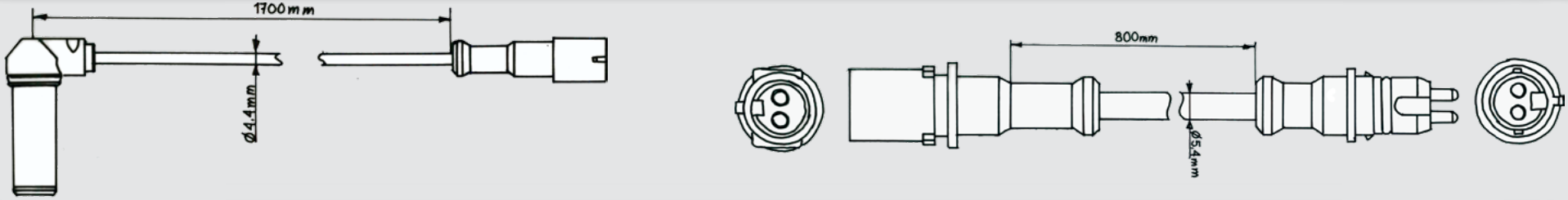

110470

ABS - sensor

VoR	OER Wabco
20566832	441 032 976 2
20428943	441 032 893 0
20390735	441 032 884 0





kg 0,24

FH / FM	09/2005 - 09/2012
FH12 / FH16	01/2002 - 09/2005
FM9 / FM12	

110475

Wear sensor

1850 mm



VoR

21390375
20928544
20526768



kg 0,23

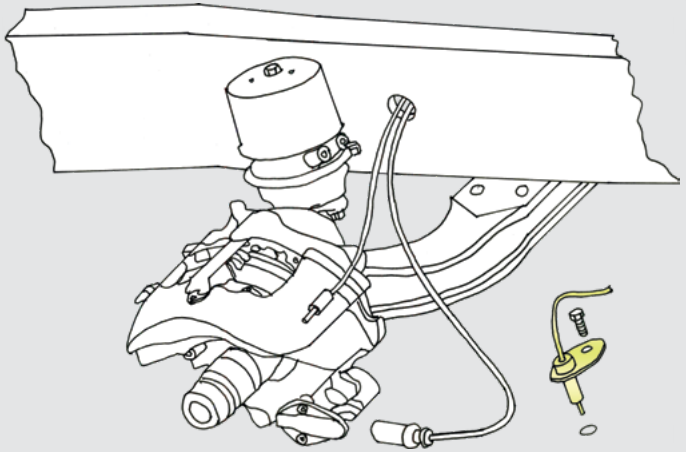

FH	09/2005 - 09/2012
FM	09/2005 - 09/2012

B8R (3)	Euro 6	2013→
B11R (3)	Euro 6	2013→
B11R	Euro 5	2011→
B13R	Euro 5	2009 - 2015
B12B/M/R		1991 - 2001
B12B/M/R		1997 - 2011 brazil
B7R	Euro 5	2001 - 2013
B9L/R/S/TL		2001 - 2013
B6R		1991 - 1999
B5LH (3)		2010→
B5TL (3)		2010→
B5LH		2010→
B5RH		2010→

111068

Bump stop → Tandem balance axles

VoR **1629744**

Renault R **74 01 629 744**

Material:
Cast iron





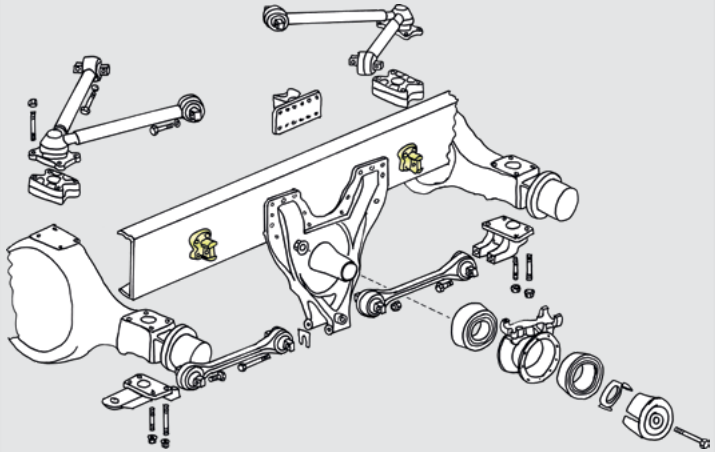

FH (4)	09/2012→
FH 12/16	01/2002 - 09/2005
FM (4)	09/2012→
FM 9/12	01/2002 - 09/2005

kg 1,69

Suitable flange screw: M14 x 40 mm

111076

Bracket → Tandem balance axles Material: Cast iron

VoR 21477447





kg 6,5

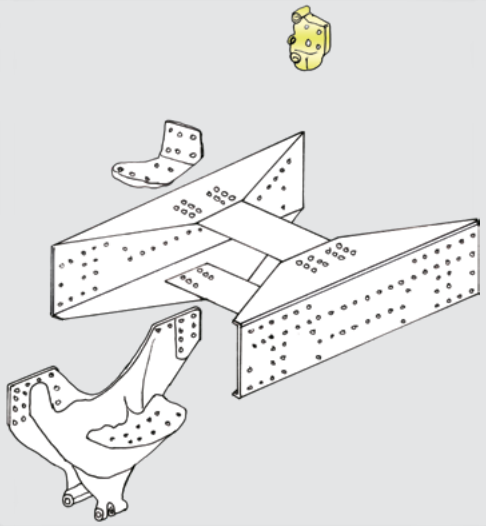

FH (4)	09/2012→
FH 12/16	09/2005 - 09/2012
FM (4)	09/2012→
FM 9/12	09/2005 - 09/2012

111077

Bracket → Tandem balance axles Material: Cast iron

VoR 21477446





kg 6,45

111078

Bracket → Tandem balance axles Material: Cast iron

VoR 21477449





kg 5,75

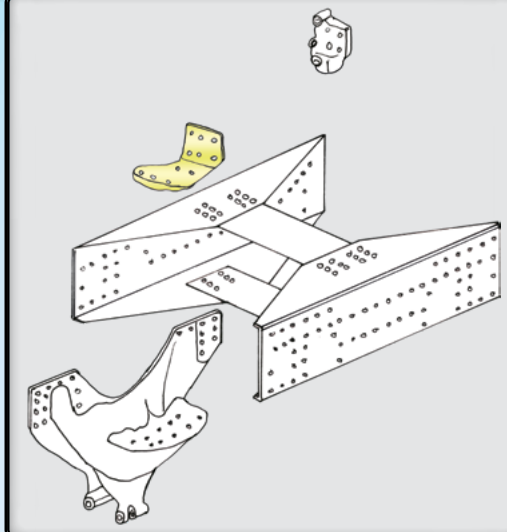

FH (4)	09/2012→
FH 12/16	09/2005 - 09/2012
FM (4)	09/2012→
FM 9/12	09/2005 - 09/2012

111079

Bracket → Tandem balance axles Material: Cast iron

VoR 21477450





kg 5,65

111070

Spring anchorage, left
→ Mid of front leaf springs

VoR

22562782
22562785



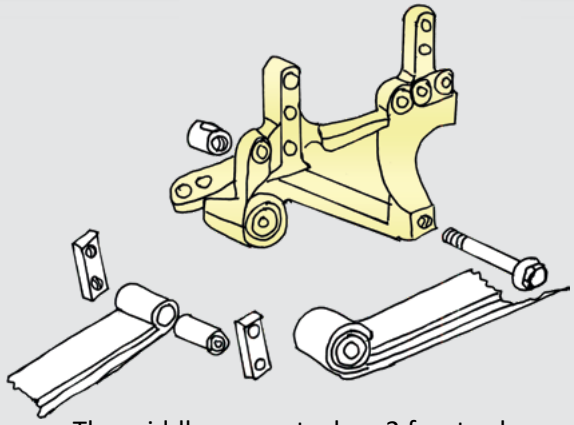

The middle support when 2 front axles.

FH (4), FM (4) | 09/2012→ | (Only →)

Suitable bushings:

HD 112964
VoR 21175831



HD 112965
VoR 22221048



Suitable installation shaft kit:

HD 112962





kg 28

Material: Cast iron

111071

Spring anchorage, right
→ Mid of front leaf springs

VoR

22562783
22562786





kg 28

Material: Cast iron

111080

Anchorage → Front leaf spring, left

VoR 21594731

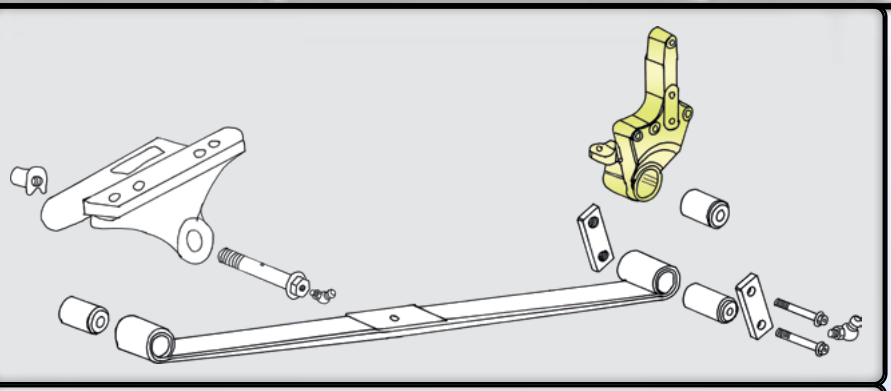

FH (4), FM (4) 09/2012→

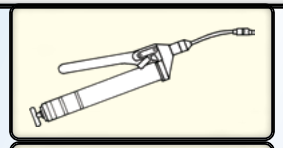

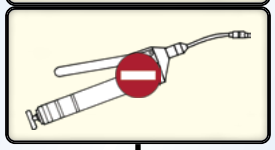



kg 10,6

111081

Anchorage → Front leaf spring, right

VoR 21594732



kg 10,6

112964

old number: **112962**

Bushing

Ø 24,4/60,8 x 96 mm

VoR **21175831**

-40 °C

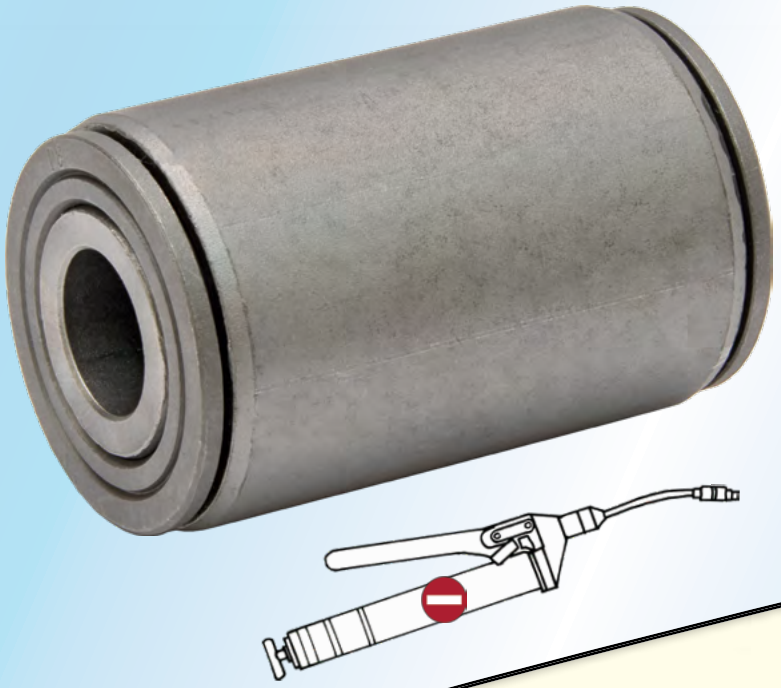

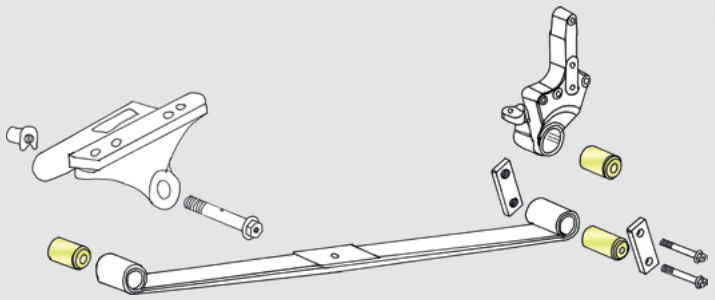

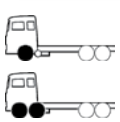

FH	09/2012→
FM	09/2012→

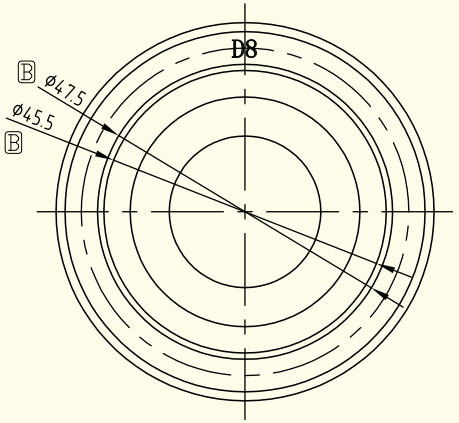

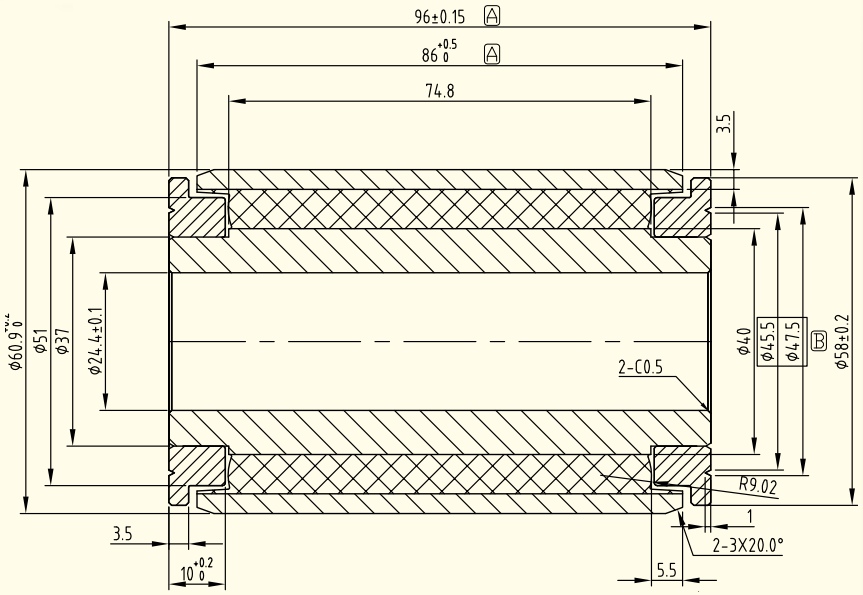

kg 1,24

112965

Bushing

Ø 24,6/48,0/60,8 x 96,2 mm

VoR

22221048
21226775

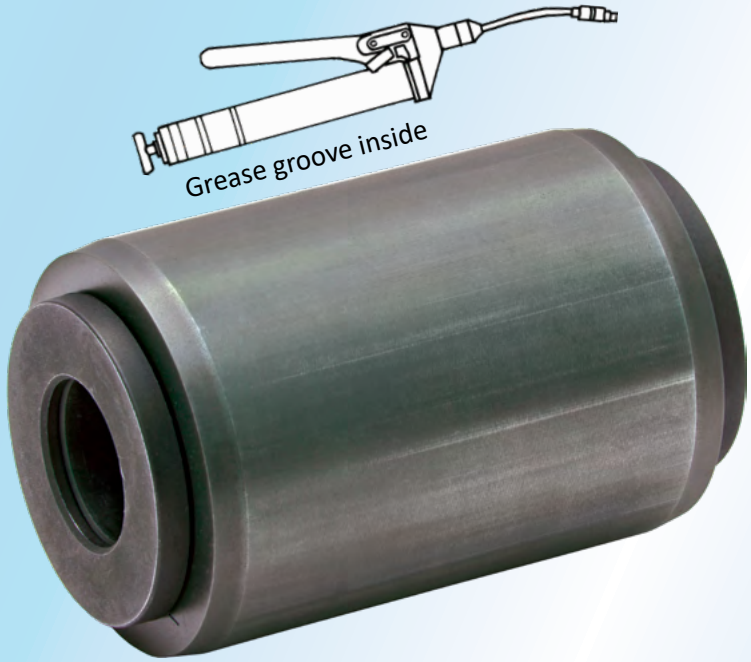

kg 1,61

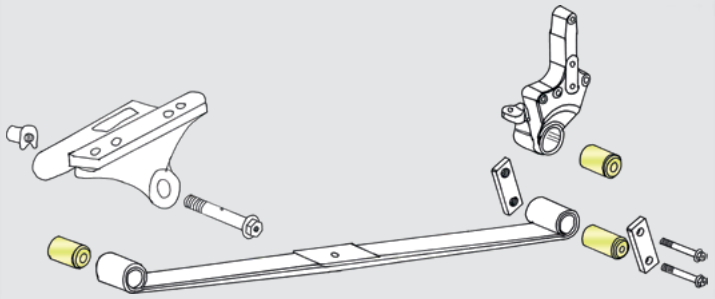

FH	09/2012→
FM	09/2012→

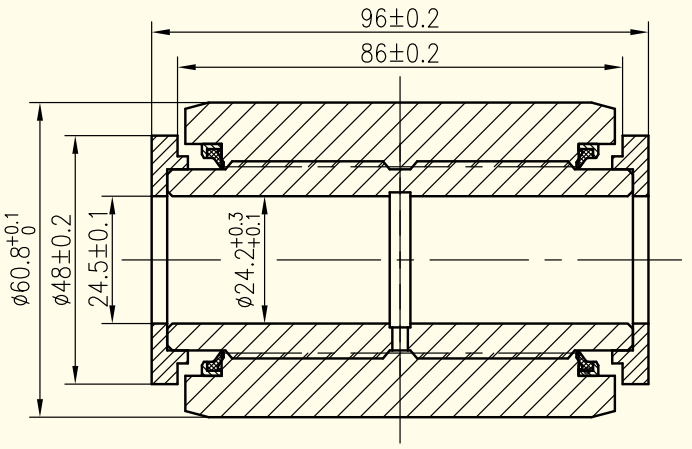

112956

Shaft → Dry / Lubricated system

VoR

21838765
21960567

Length: 143 mm
M24 x 3.0 mm

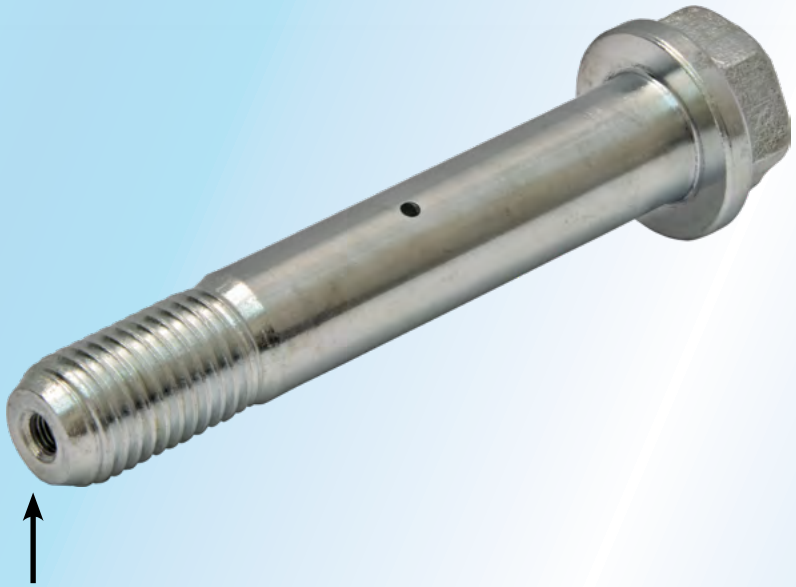

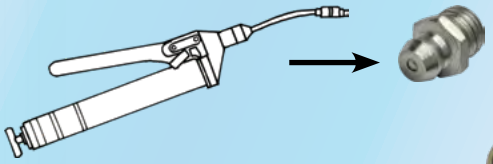

M8 x 1,0 mm

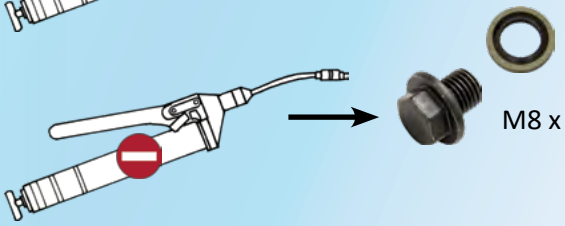

M8 x 1,0 mm

kg 0,61

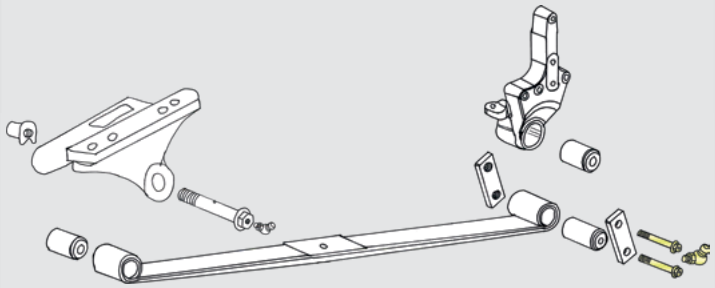

FH (4)	09/2012→
FM (4)	09/2012→

Suitable bushings:

HD 112964
VoR 21175831

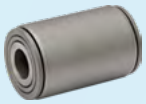

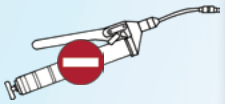

HD 112965
VoR 22221048

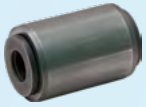

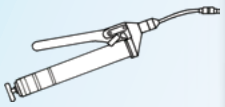

Complete installation kit: HD 112960

112960

Installation kit

VoR 21838765 21960567 21175833 21175835 21176204 21176207

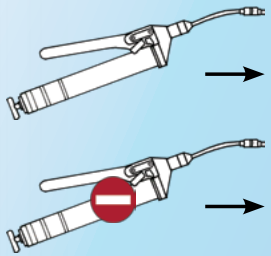

M8 x 1,0 mm



VoR
21838765
21960567
143 mm
M24 x 3.0 mm

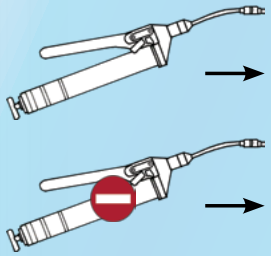

M8 x 1,0 mm



VoR
21838765
21960567
143 mm
M24 x 3.0 mm



kg 3,43

VoR 21175833
M24 x 3 mm threads
145 x 50 x 15 mm

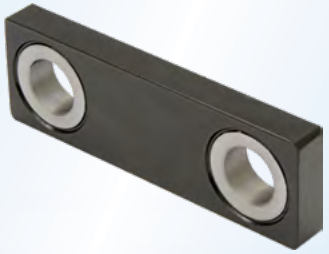

VoR 21175835
Ø 25 mm
145 x 50 x 15 mm

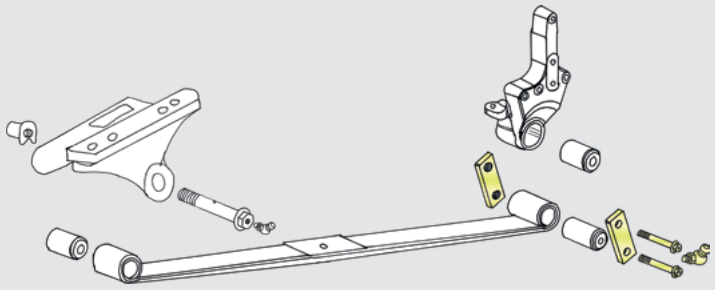

FH (4) 09/2012→
FM (4) 09/2012→

Suitable bushings:

HD 112964
VoR 21175831

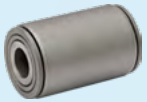

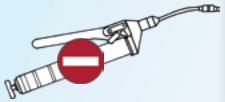

HD 112965
VoR 22221048

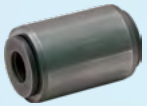

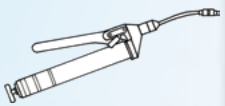

112961

Installation shaft kit



VoR
21838764
21960568

208 mm
M24 x 3,0 mm

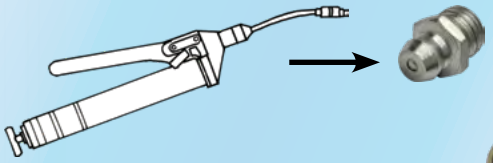

M8 x 1,0 mm

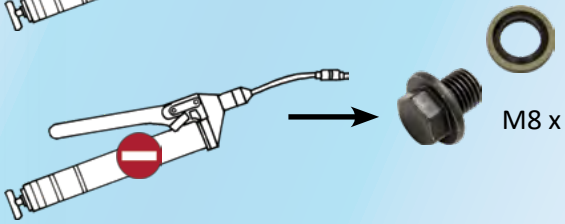

M8 x 1,0 mm



VoR **21376743**

Ø 40,0 mm x 45 mm
M24 x 3,0 mm

kg 1,12

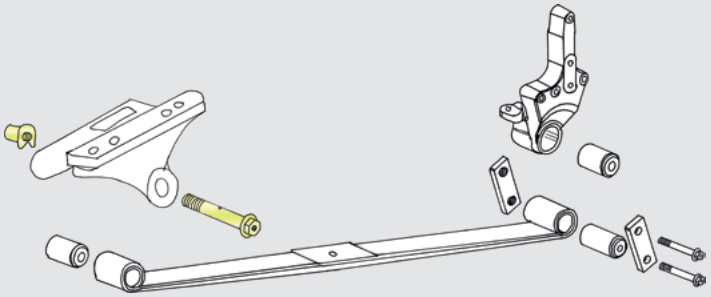

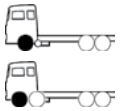

FH (4)	09/2012→
FM (4)	09/2012→

Suitable bushings:

HD 112964
VoR 21175831

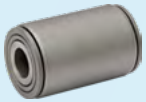

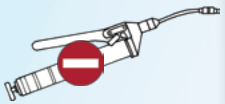

HD 112965
VoR 22221048

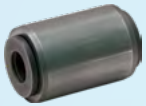

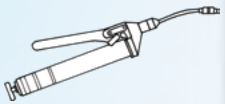

112962

Installation shaft kit



VoR

21838766
21960569

170 mm
M24 x 3.0 mm

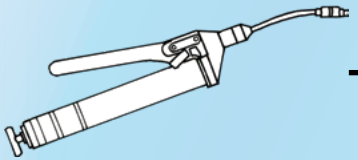

M8 x 1,0 mm

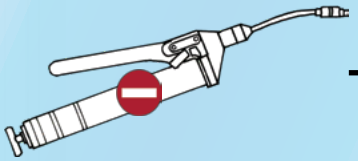

M8 x 1,0 mm

VoR **22412256**

Ø 40 mm x 37 mm
M24 x 3.0 mm

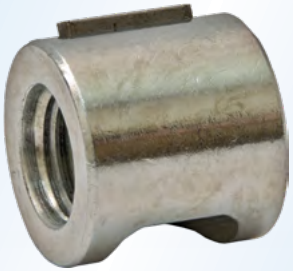

kg 0,94

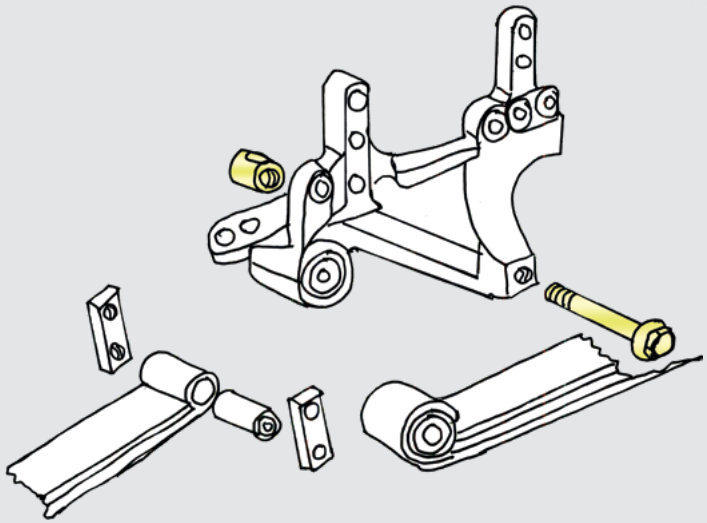

The middle support when 2 front axles.

FH (4)	09/2012→
FM (4)	09/2012→

(Only →)

112060

Sensor → level control

VoR

22194741
21643575
21585711
21253672
20573428

Renault R

7422194741
7421643575

Material: Plastic





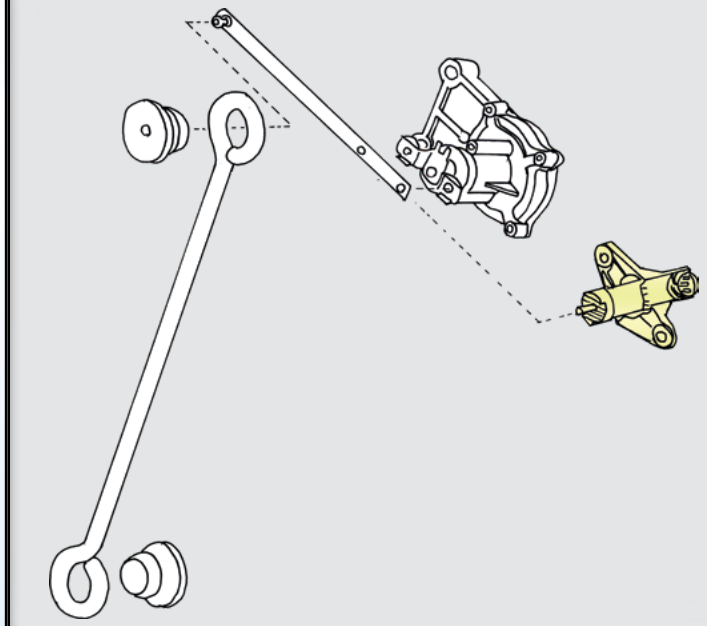

FH (4)	09/2012→		
FH	09/2005 - 09/2012		
FM (4)	09/2012→		
FM	09/2005 - 09/2012		

B8 (3)	2013→		
B11R (3)	2013→		
B11R	2011→	D11C	Euro 5
B13R	2009 - 2015	D13C	Euro 5
B7R/LE R7	2001 - 2013		Euro 5
B9L/R/S/TL	2002 - 2013/4		
B12B/M	1991 - 2001		
B12B/M	1991 - 2001	Brazil	
B5LH/TL (3)	2013→	Hybrid	
B5LH/RH	2010→	Hybrid	

Installation:

- Align the yellow marks.
- Calibrate the sensor according to vehicle manufacturer instructions.

kg 0,26

112062

Sensor → level control

VoR

20850557
20514066
8144352
9517678

Renault R

7420850557
7420514066
7408144352

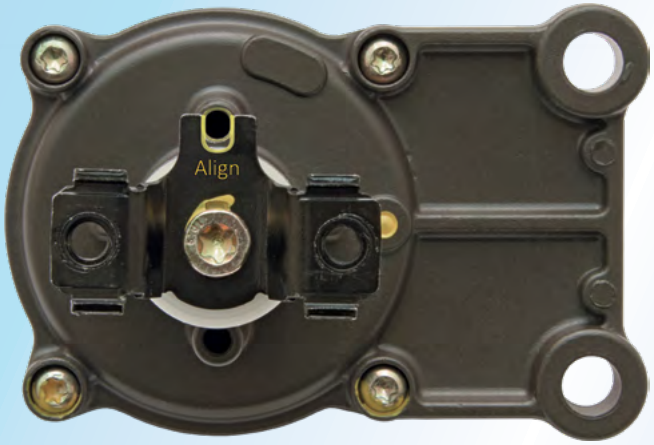







kg 0,25

Installation:

- Align the sensor according as seen in the pictures.
- Calibrate the sensor according to vehicle manufacturer instructions.

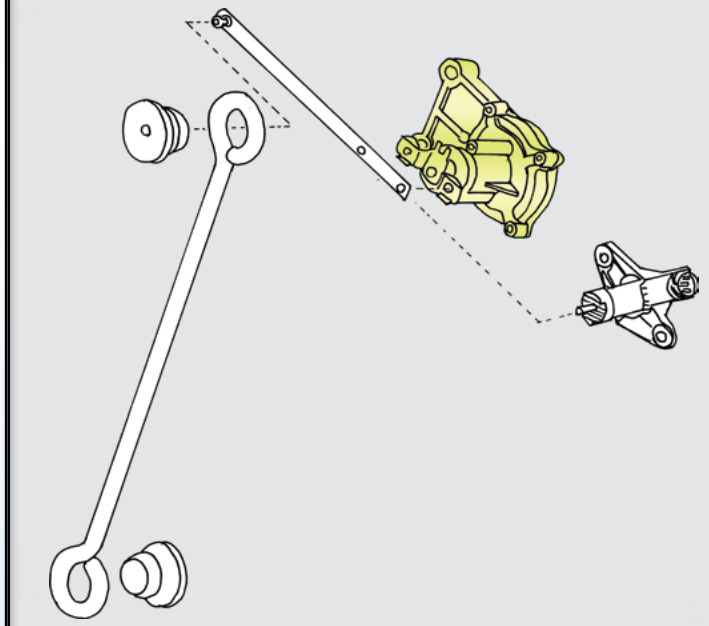

FH	09/2005 - 09/2012
FH 12/16	09/2003 - 09/2005
FM	09/2005 - 09/2012
FM 9/12	09/2003 - 09/2005
FL 6	
FL	05/2006→
FL (3)	05/2006→
FE	05/2006→
FE (3)	05/2006→

B6R	1991 - 1999		
B7R/LE R7	2001 - 2013		Euro 5
B9L/R/S/TL	2002 - 2013/4		
B12B/M	1991 - 2001		
B12B/M	1991 - 2011	Brazil	
B13R	2009 - 2015	D13C	Euro 5

112061

Bearing cup

VoR **1079319**



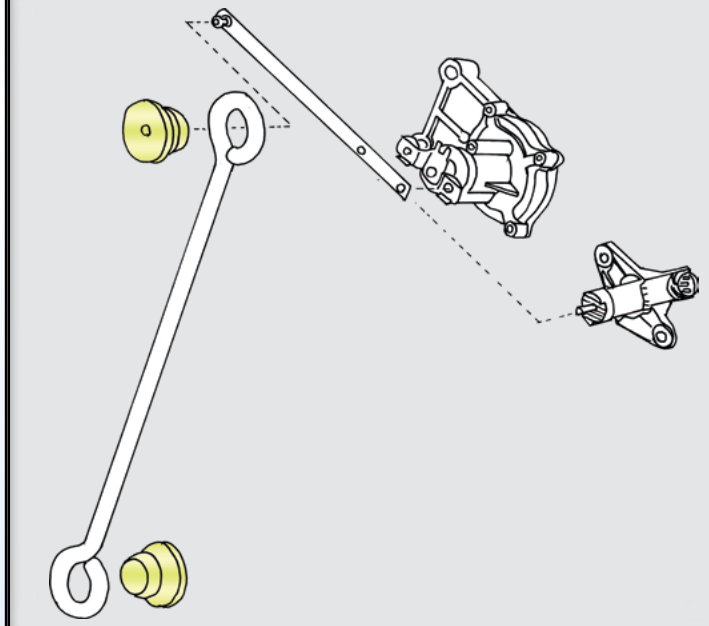

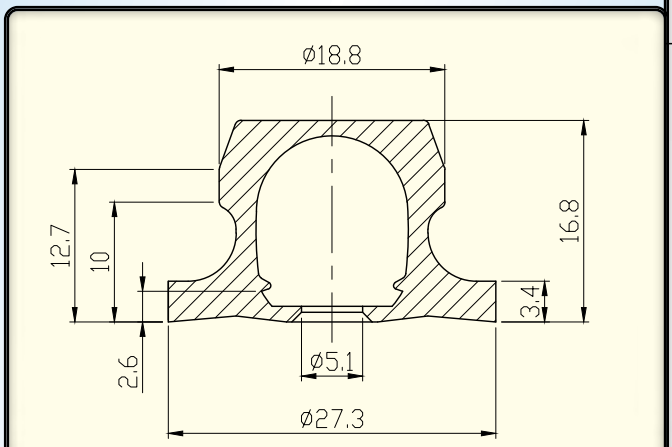

Material:
NBR-PVC rubber

kg 0,005

FH (4)	09/2012→		
FH 12/16	2001 - 09/2012		
FM (4)	09/2012→		
FM 7/9/10/12	2001 - 09/2012		

B8 (3)	2013→		
B11R (3)	2013→		
B11R	2011→	D11C	Euro 5
B13R	2009 - 2015	D13C	Euro 5
B7R/LE R7	2001 - 2013		Euro 5
B9L/R/S/TL	2002 - 2013/4		
B12B/M	1991 - 2001		
B12B/M	1991 - 2001	Brazil	
B5LH/TL (3)	2013→	Hybrid	
B5LH/RH	2010→	Hybrid	

112439

Bearing

VoR **1629169**

Material:
NR Natural Rubber and Synthetic rubber blend.

Prepared especially for low temp conditions.
-40 °C → +80°C

Hardness:
A 60-65 Shore

kg 0,51

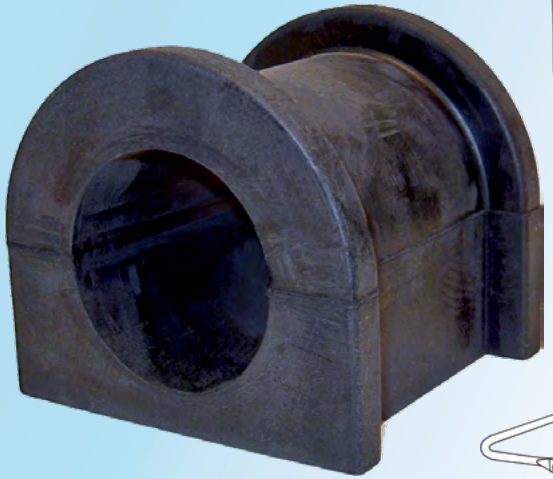

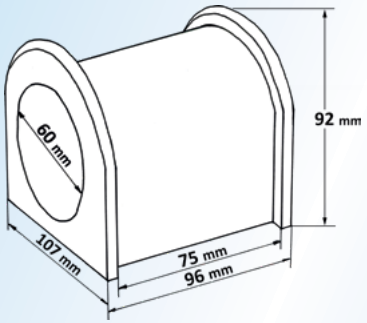

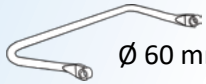

Ø 60 mm

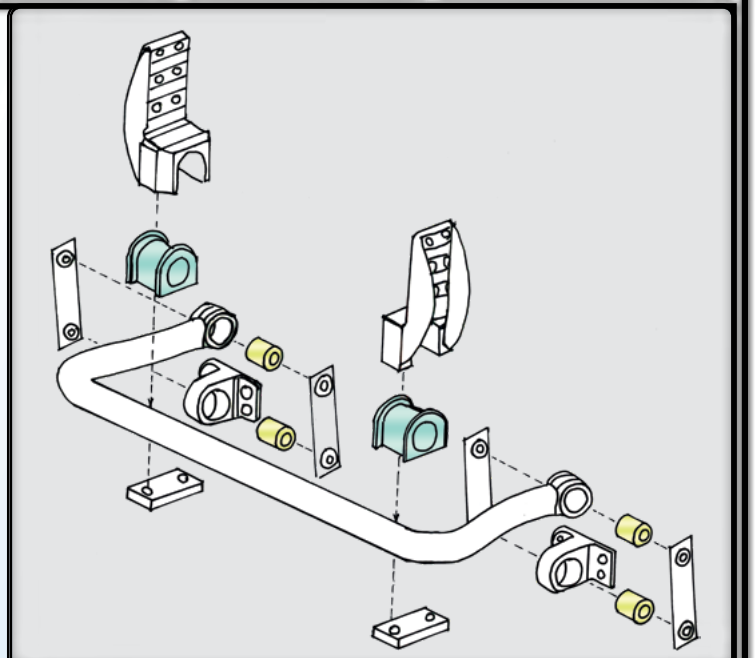

112441

Bushing

VoR

22139175
1134955

Material:
NR Natural Rubber

Hardness:
A 65 +/-5 Shore

Tensile strength:
17 MPa

kg 0,44

Ø inside: 28 mm
Ø outside: 57,5 mm
Length: 55 / 64 mm

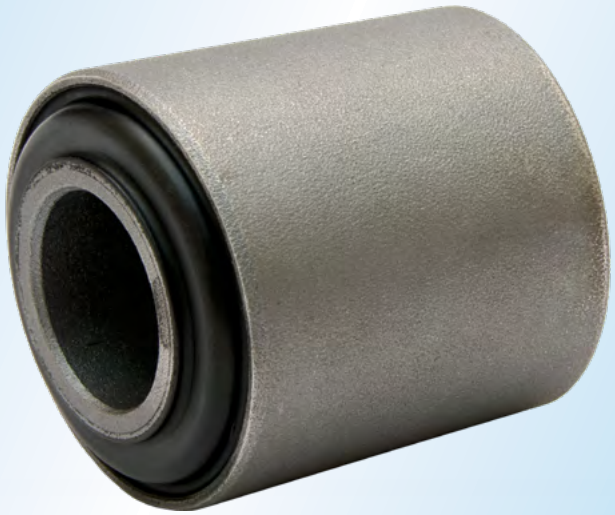

112439

112441

LHD RHD

FH (4)	09/2012→
FH	09/2005 - 09/2012
FH 12/16	1995 - 09/2005
FM (4)	09/2012→
FM	09/2005 - 09/2012
FM 9/12	09/2003 - 09/2005
FM 7/10/12	1998 - 09/2003

112966

Anchorage → front leaf spring, left

VoR 21575593

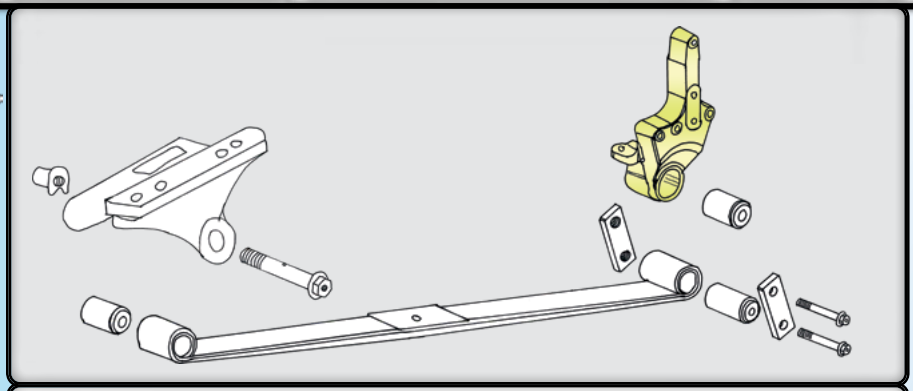

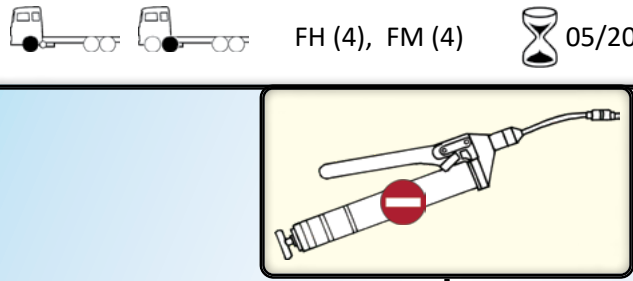

Coming later to our product selection

Includes bushing:
← HD 112964
VoR 21175831

kg ?

Lubricated version → HD 112968

112967

Anchorage → front leaf spring, right

VoR 21575601

Coming later to our product selection

Includes bushing:
← HD 112964
VoR 21175831

kg ?

Lubricated version → HD 112969

FH (4), FM (4) 05/2012→

113000

Steering joint



Length: 100 mm

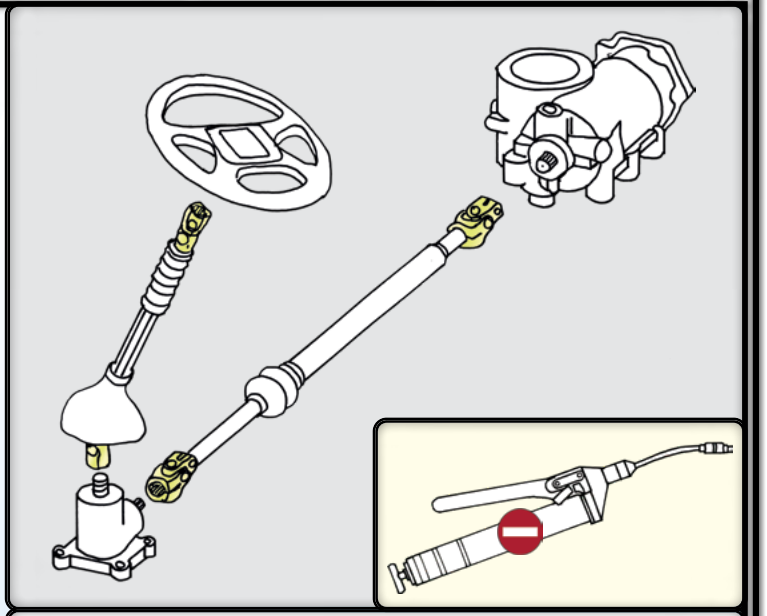

VoR

20582360
8189503
1606502
367847

MBR

381 460 0057
421 460 0457
425 460 0057
425 460 0157
425 460 0457
000 460 0157
000 460 0057
316 460 0157
316 460 0057

DAF R **0393 890**

ManR **82.46105.6007**

Renault R **50 01 834 314**

VOLVO

For all models

MERCEDES

Actros	04/1996 - 10/2002
Ateco 2.	10/2004 →
Axor	01/2002 - 10/2004
Axor 2.	10/2004 →
Econic	03/1998 → 10/2007 →
Unimog	01/1977 - 05/1988

SK MK NG LK/LN2 LP

DAF

XF	10/2012 →
XF 105	10/2005 →
95 XF	01/1997 - 09/2002
CF 85	01/2001 - 05/2013
CF 75	01/2001 - 05/2013
CF 65	01/2001 - 05/2013
LF 55	01/2001 → 05/2006 →
LF 45	01/2001 → 12/2005 →

kg 0,65

Kiinnitysruuvit oltava LK 10.9 ja lukkomutterit LK 10.
Installation screws have to be class 10.9 and lock nut class 10.
Крепежные болты должны быть классом прочности 10,9 а стопорные гайки классом прочности 10.

116150

Relay → start motor

24 v

VoR **21019159**



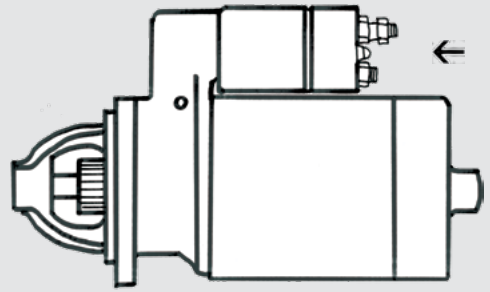

FH (4)	13, 16	09/2012→
FH		09/2005 - 09/2012
FM (4)	13	09/2012→
FM	13	09/2005 - 09/2012

B13R	13	2009 - 2015

kg 0,3

116202

Main power control switch **24 v**

VoR

22446845
21470290



kg 0,25

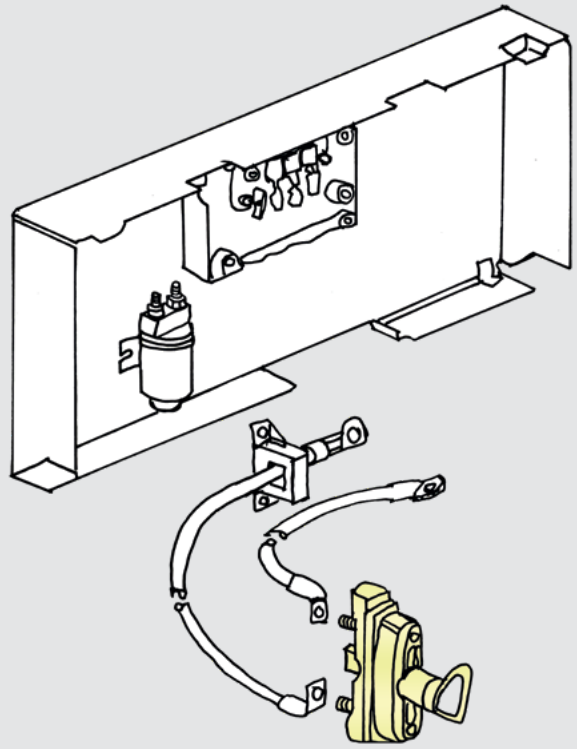

FH (4)	09/2012→
FM (4)	09/2012→

ADR (Carriage of Dangerous Goods by Road)

116200

Main power manual switch **24 v / 250 A**

VoR

21243844
21199003
20514309



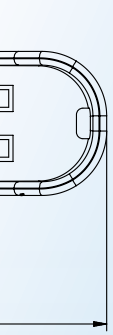

kg 0,32

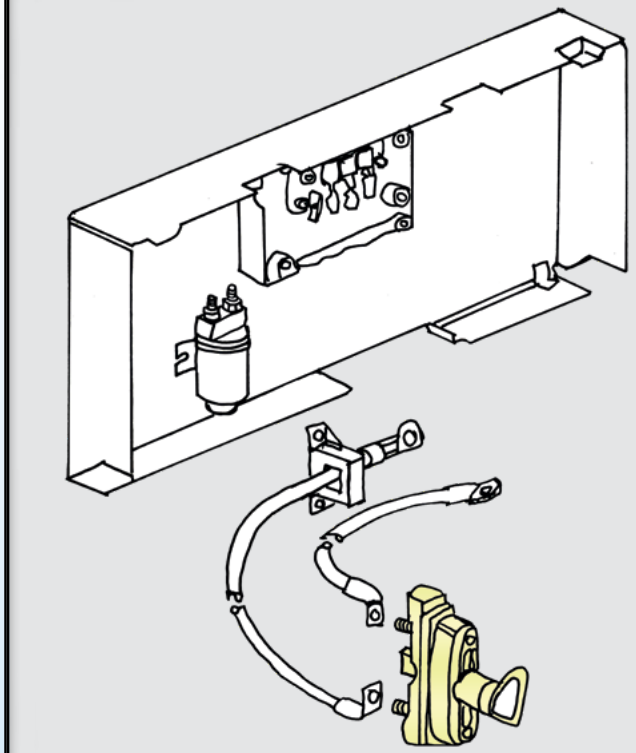

FH	09/2005 - 09/2012
FH 12/16	09/2003 - 09/2005
FM	09/2005 - 09/2012
FM 9/12	09/2003 - 09/2005
FL (3)	
FL	

B5 LH/TL (3), B7R, B9 R/TL
B11R, B11R (3), B12M, B13R

116460

116460 can be replaced by 116462

Light switch (Without light height adjustment)

VoR

20953569
20942844
20466302

Material: Plastic



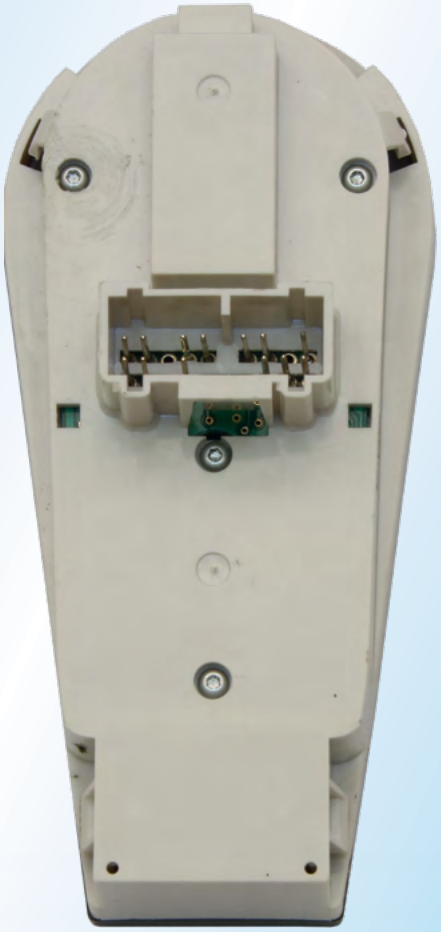

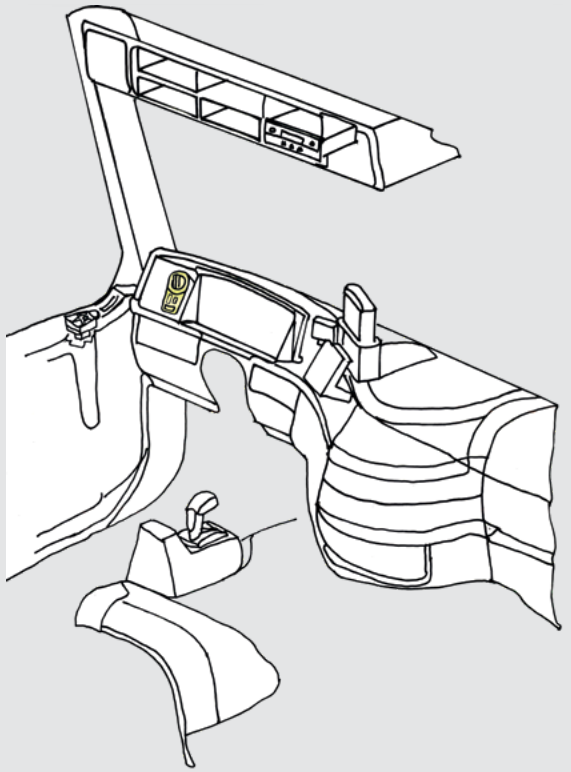

FH	09/2005 - 09/2012
FH 12/16	09/2003 - 09/2005
FH 12	01/2002 - 09/2003
FM	09/2005 - 09/2012
FM 9/12	01/2002 - 09/2005

B5LH (3), B6R, B7R/LE, B8R (3), B9R/L/S/TL, B11R (3), B12B B13R

kg 0,14

116462

Light switch (With light height adjustment)

VoR

20953573
20942846
20466304

Material: Plastic







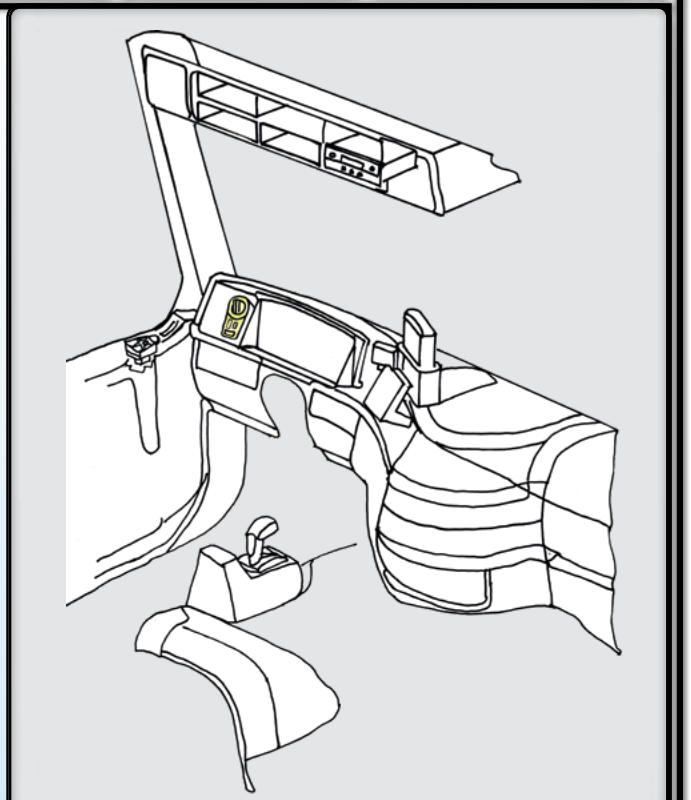

kg 0,15

FH	09/2005 - 09/2012
FH 12/16	09/2003 - 09/2005
FH 12	01/2002 - 09/2003
FM	09/2005 - 09/2012
FM 9/12	01/2002 - 09/2005

116908

Rubber strap kit

VoR 309042

MBR 385 426 1140
387 426 0040

DAF R 630960

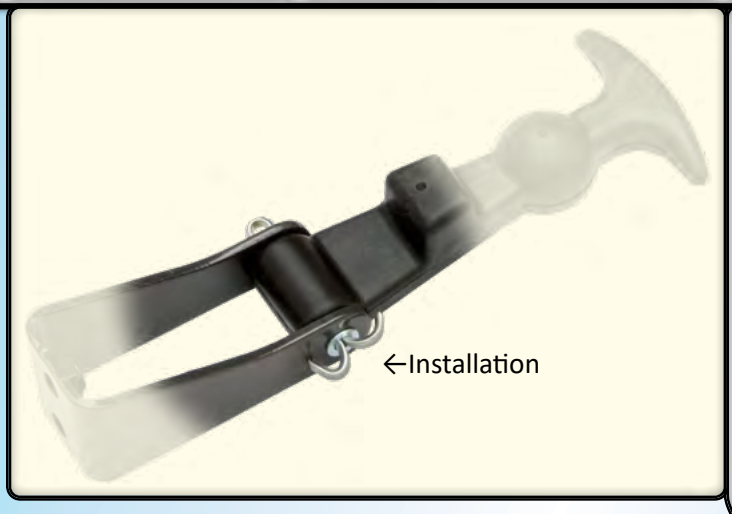

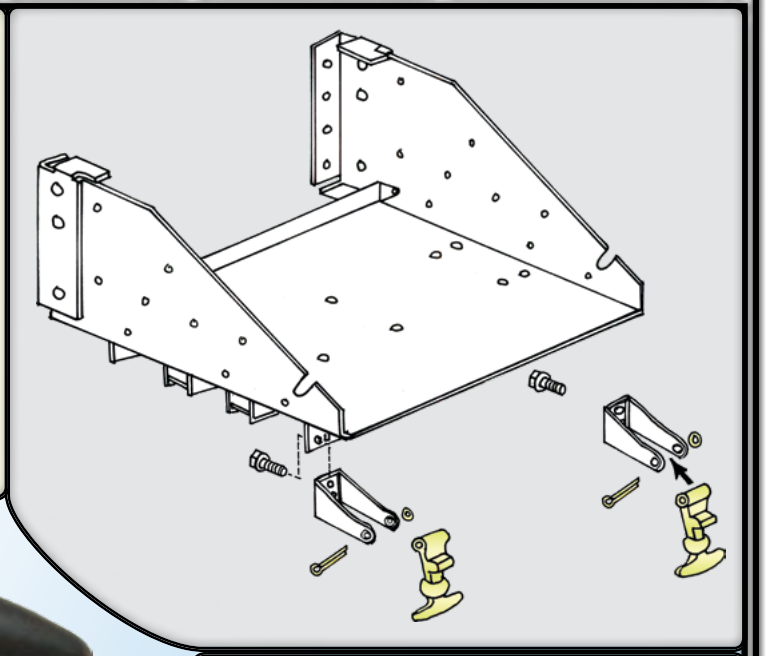



Material:
Steel bracket
EPDM rubber
-40°C → +120°C

Length: 125 mm
Width: 29 mm (fastening hole)

kg 0,09

FH	09/2005 - 09/2012
FH 12/16	1998 - 09/2005
FM	09/2005 - 09/2012
FM 9/12	01/2002 - 09/2005
FM 7/10/12	1998 - 01/2002
FL 6	

B7R	R7	2001 - 2013	
B9R	R9	2002 - 2013/4	
B11R		2001 - 2015	Euro 5
B13R		2009 - 2015	Euro 5

Mercedes, Daf, etc...

117370

Multi switch

- Mirror heating
- Central locking
- Mirror adjustment
- Door window up/down

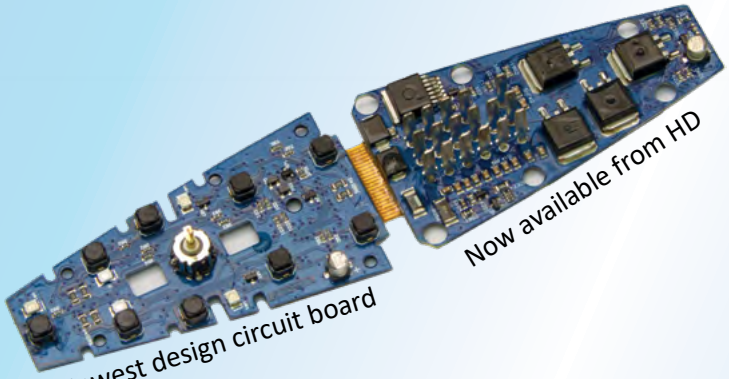

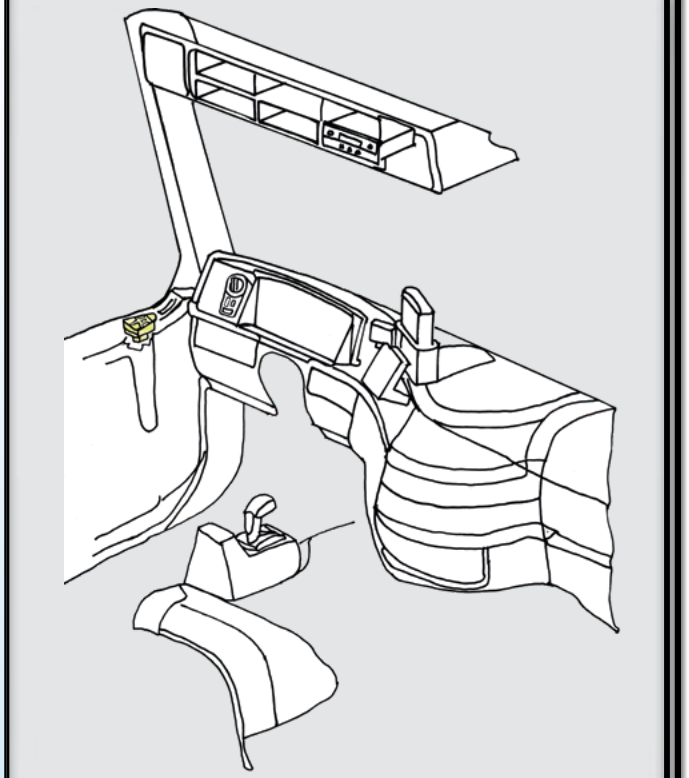

VoR

22566510
21543897
21354601
21277587
20953592
20752918
20568857
20455317





Material: Plastic

kg 0,17

FH	09/2005 - 09/2012
FH 12/16	09/2003 - 09/2005
FH 12	01/2002 - 09/2003
FM	09/2005 - 09/2012
FM 9/12	01/2002 - 09/2005

118130

Door lock (Left)

VoR

21505893
21261274
20588325
24427400
3175723
8143652

Material: Steel

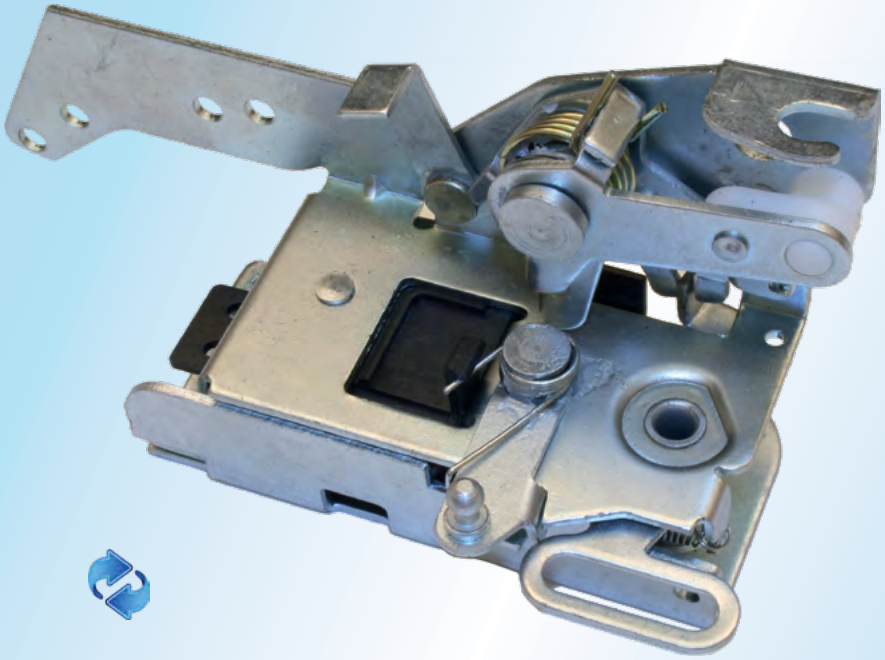

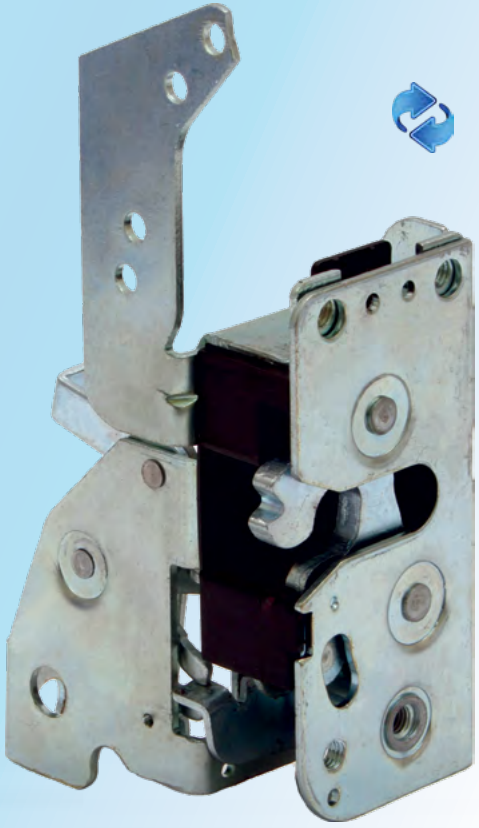

kg 0,54

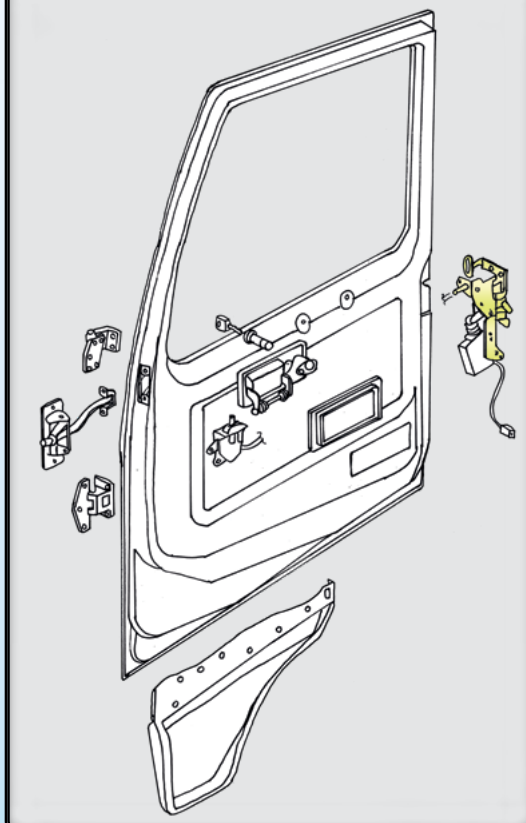

FH	09/2005 - 09/2012
FH 12 / 16	09/2003 - 09/2005
FH 12 / 16	1993 - 09/2003
FM (4)	09/2012 →
FM	09/2005 - 09/2012
FM 9 / 12	09/2003 - 09/2005
FM 7 / 10 / 12	1998 - 09/2003

118131

Door lock (Right)

VoR

21505894
21261275
20588326
24427401
3175724
8143653

Material: Steel

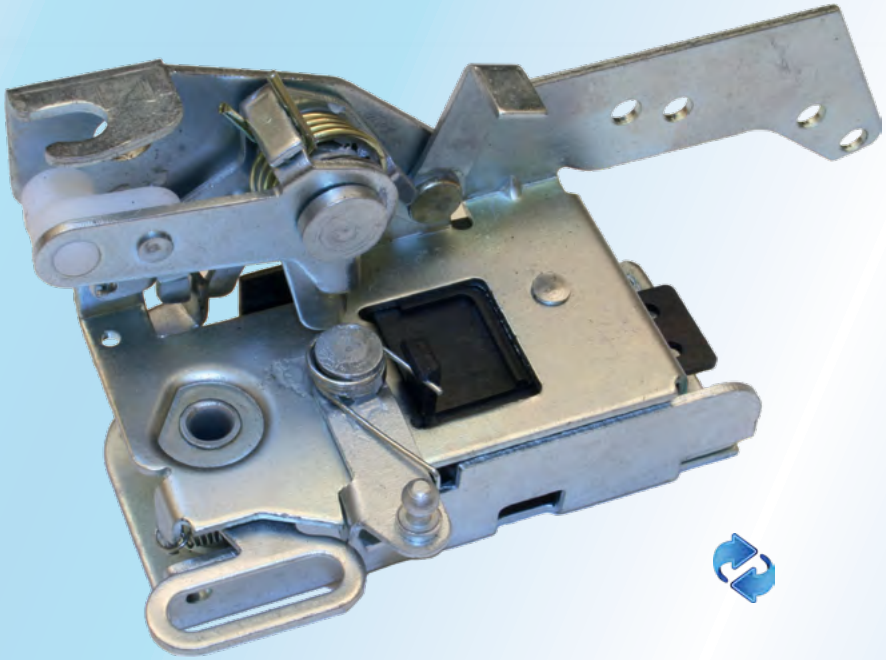

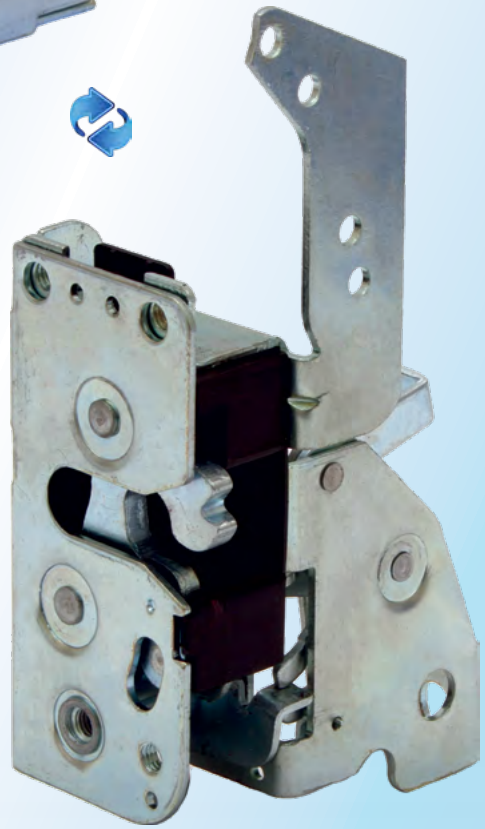

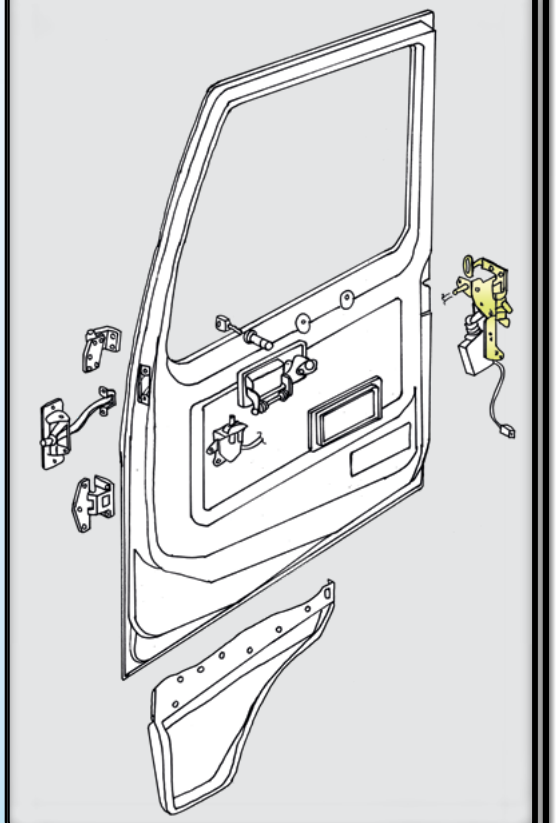

kg 0,54

FH	09/2005 - 09/2012
FH 12 / 16	09/2003 - 09/2005
FH 12 / 16	1993 - 09/2003
FM (4)	09/2012 →
FM	09/2005 - 09/2012
FM 9 / 12	09/2003 - 09/2005
FM 7 / 10 / 12	1998 - 09/2003

118118

Door stop (Left & Right)

VoR

21350581
21100900

Material: Steel



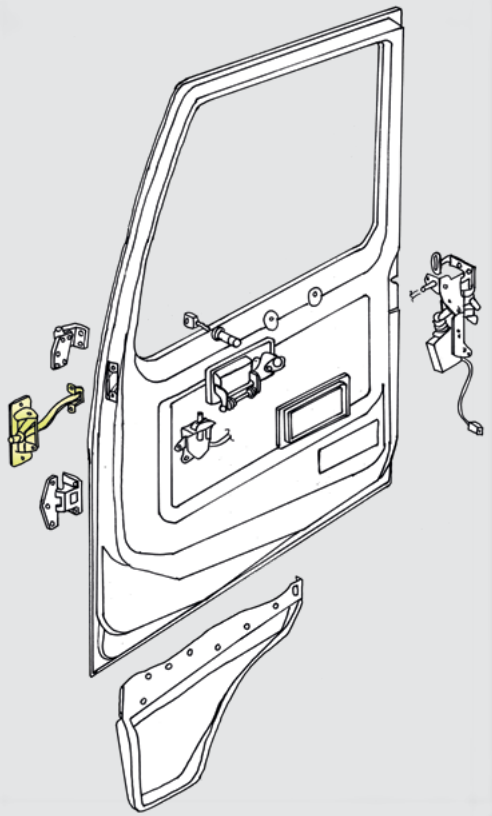

FH, FM 09/2005 - 09/2012

Door stop for trucks 1995 - 09/2005

VoR 1062636 (Not in HD product selection)

kg 0,58

118032

Door stop

VoR

82859279
82319424

Material: Steel



kg 0,67

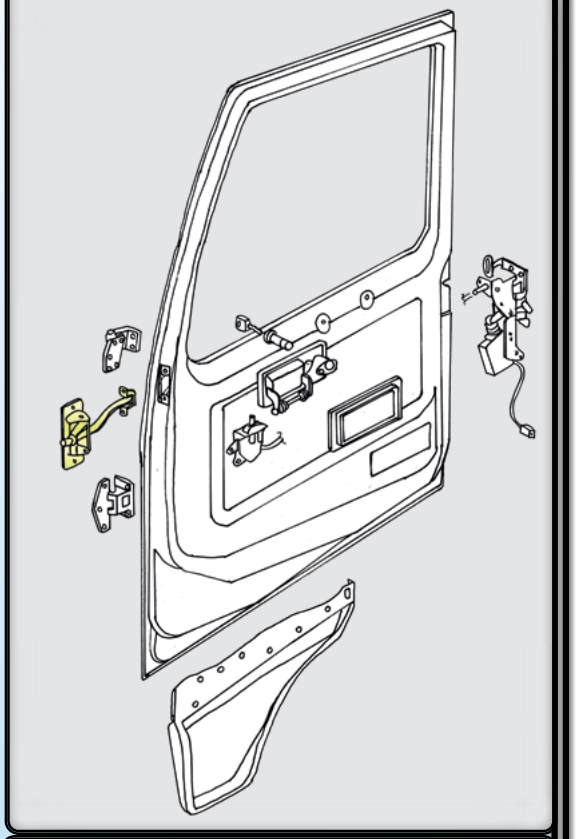

FH (4) 09/2012→

118216

Window lifter mechanism with motor, left



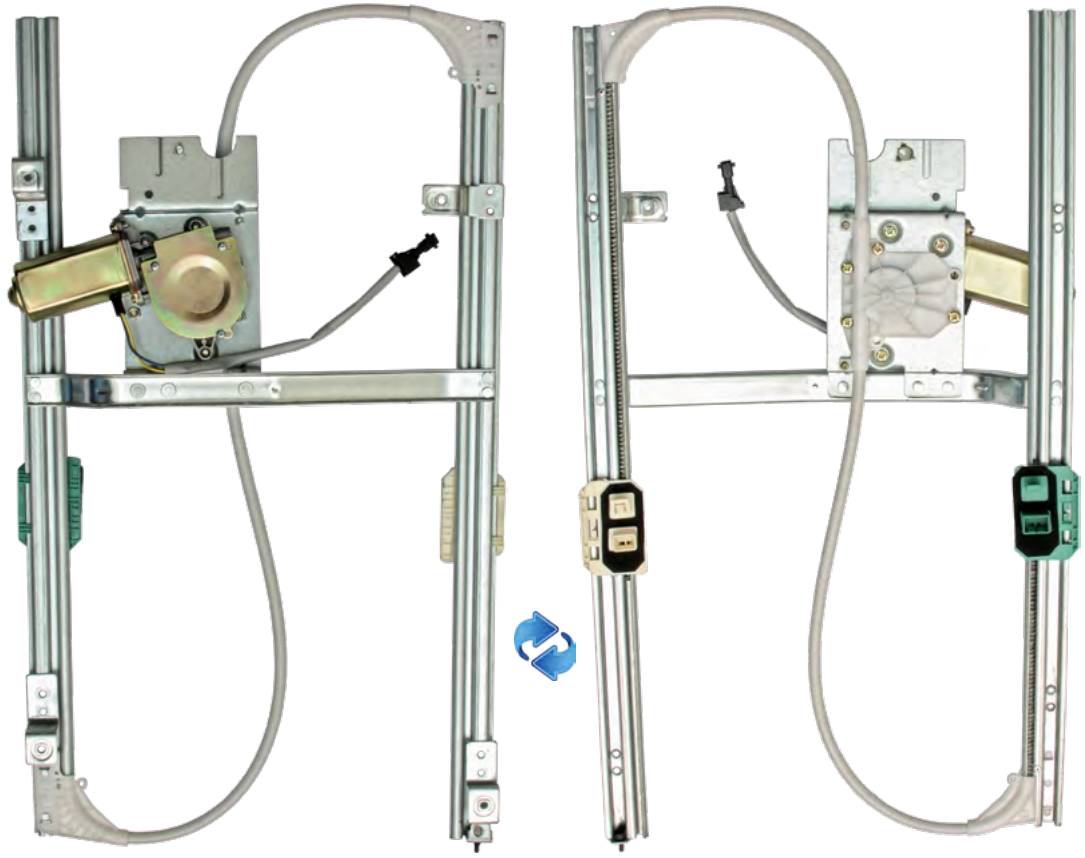





VoR

84561609
22189860
20557552
82497193

Renault R

7484561609
7422189860
7420557552
7482497193

DAF R

1707356
1400753

→ Volvo FL, FL (3)
→ Volvo FE, FE (3)
→ Renault Kerax Midlum Premium
→ DAF LF 45/55

kg 2,75

118217

Window lifter mechanism with motor, right

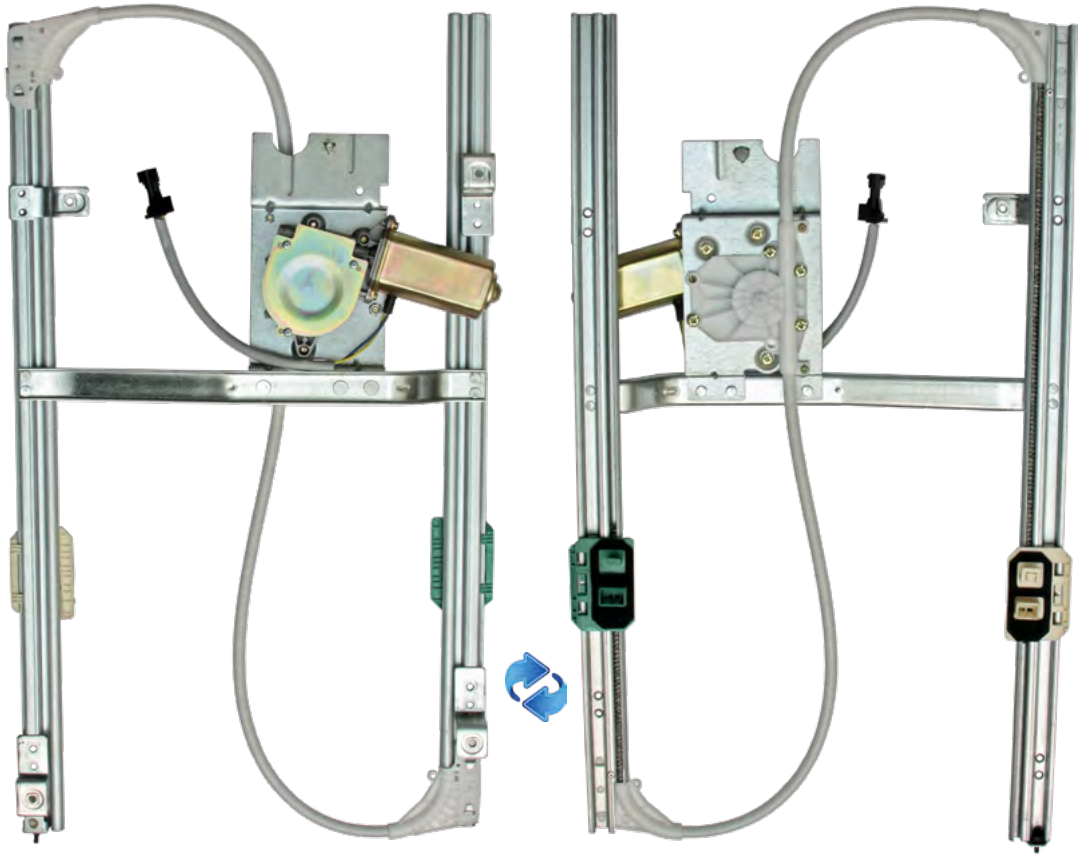





VoR

84561621
22189861
20557554
82497194

Renault R

7484561621
7422189861
7420557554
7482497194

DAF R

1707357
1400754

→ Volvo FL, FL (3)
→ Volvo FE, FE (3)
→ Renault Kerax Midlum Premium
→ DAF LF 45/55

kg 2,75

118210

Window lifter, left

Reference numbers → **FH**

VoR **3176541**
VoR **1063291**

Reference numbers → **FM**

VoR **3176545**

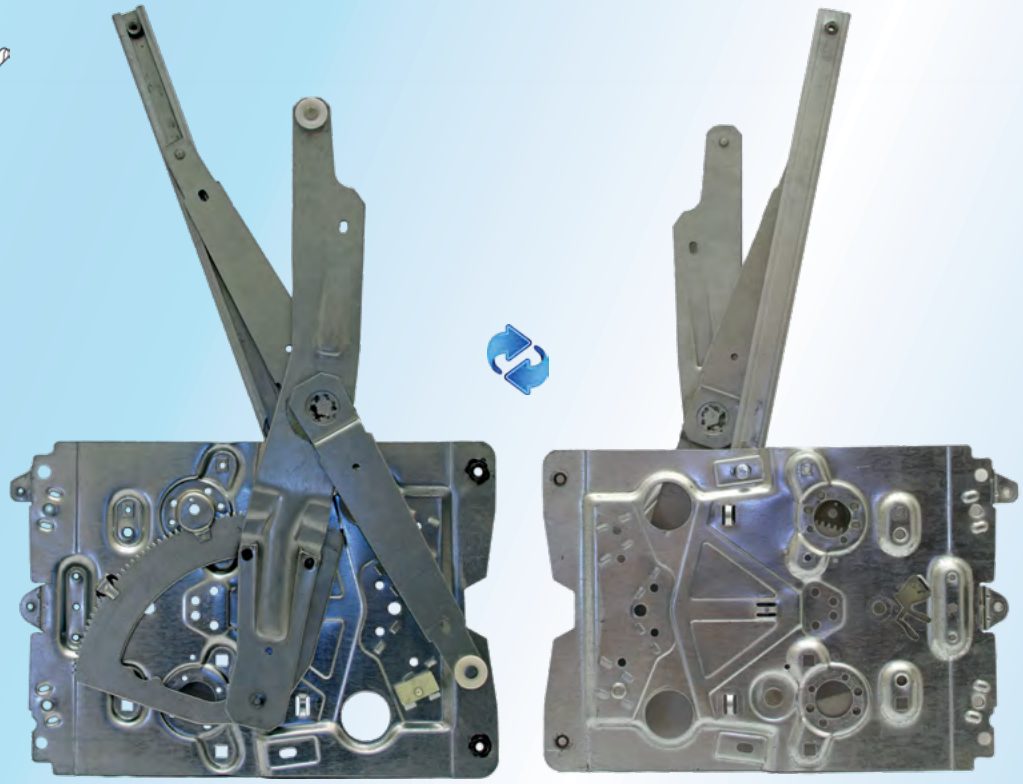

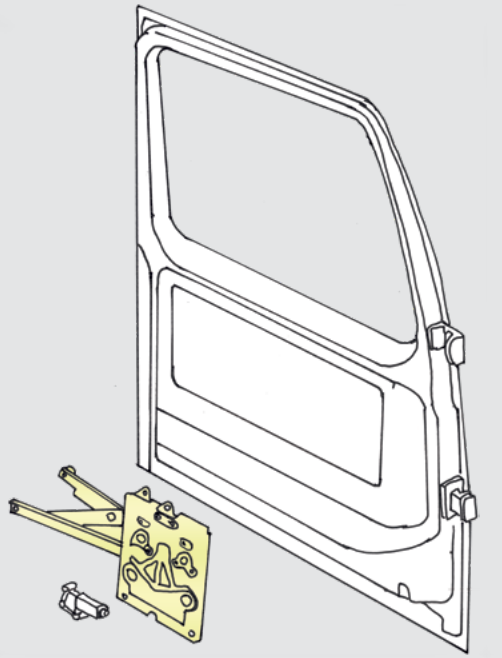

kg 3,1

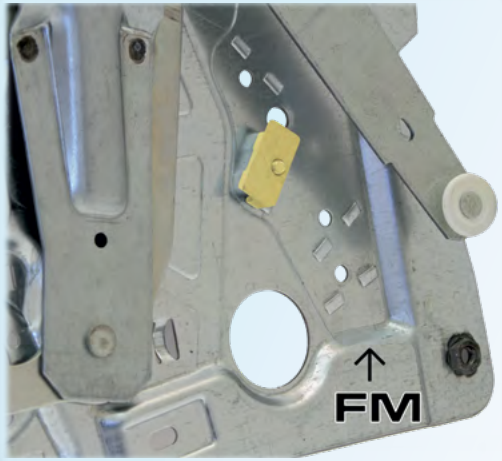

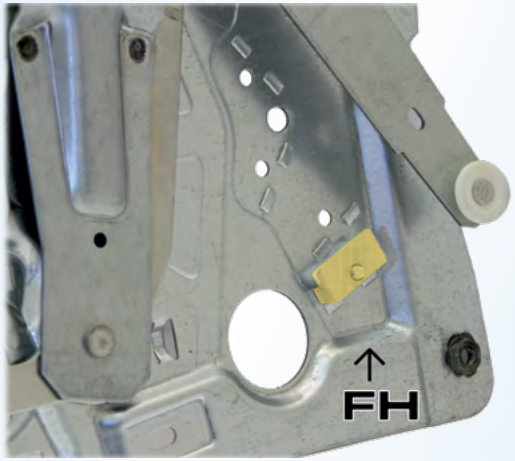

← Change the stopper position if needed.

Stopper marked with yellow.

← При необходимости измените положение ограничителя.

Ограничитель отмечен желтым цветом.

FH	09/2005 - 09/2012
FH 12/16	1995 - 09/2005
FM	09/2005 - 09/2012
FM 7/9/10/12	1998 - 09/2005

Suitable motor:
HD 118220

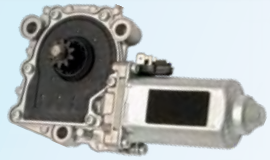

118211

Window lifter, right

Reference numbers → **FH**

VoR **3176542**
VoR **1063292**

Reference numbers → **FM**

VoR **3176546**

kg 3,1

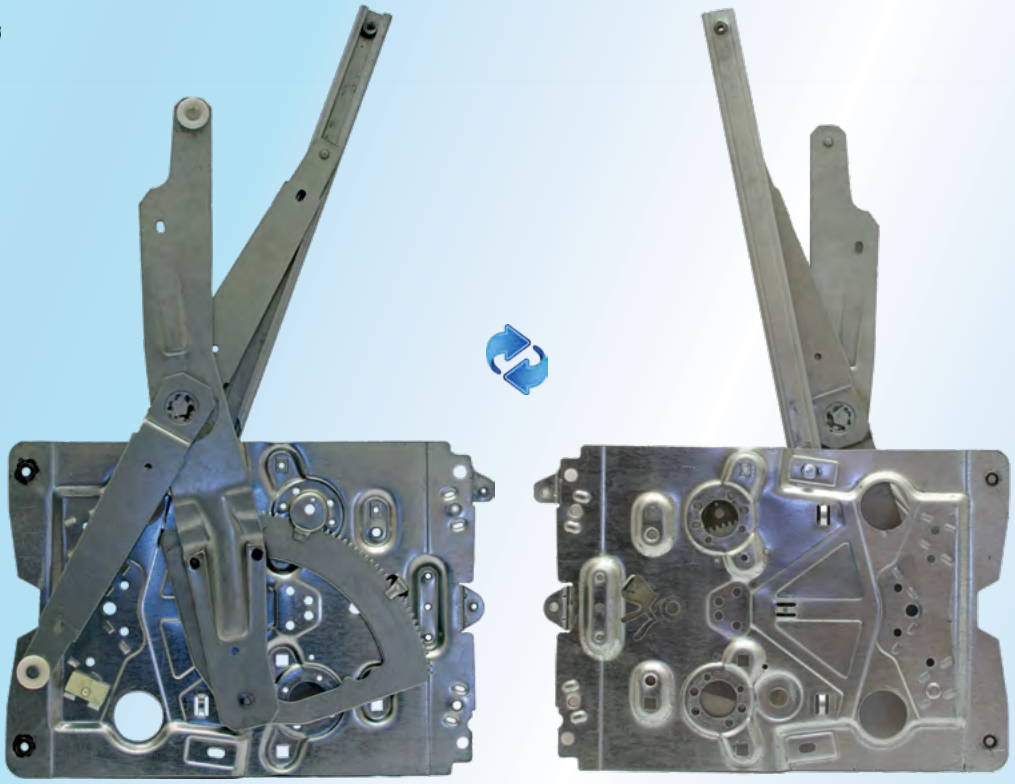

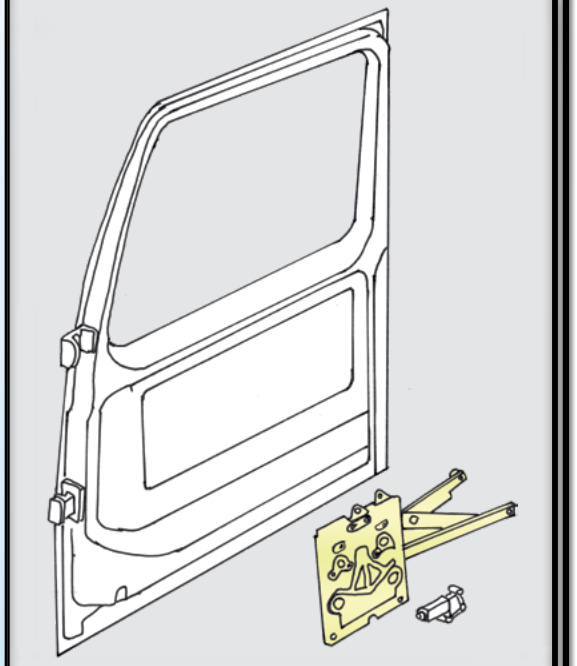

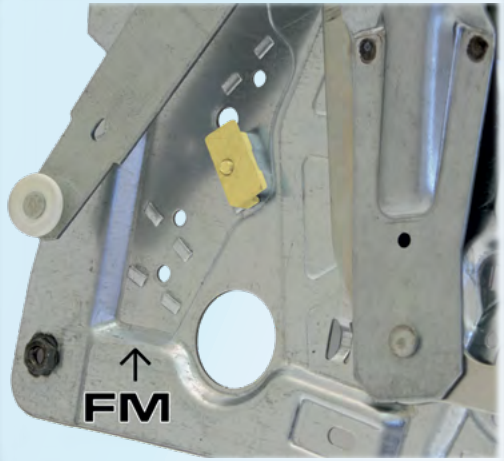

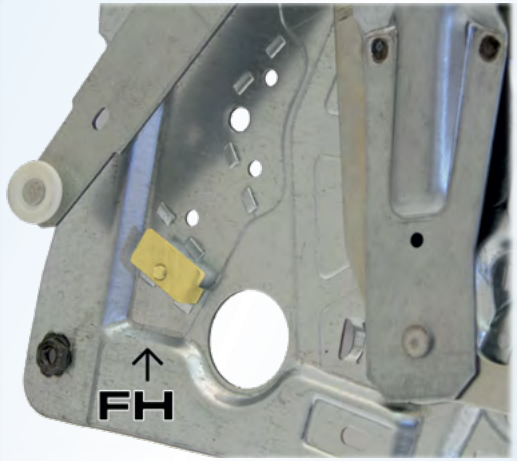

← Change the stopper position if needed.

Stopper marked with yellow.

← При необходимости измените положение ограничителя.

Ограничитель отмечен желтым цветом.

FH	09/2005 - 09/2012
FH 12/16	1995 - 09/2005
FM	09/2005 - 09/2012
FM 7/9/10/12	1998 - 09/2005

Suitable motor:
HD 118221

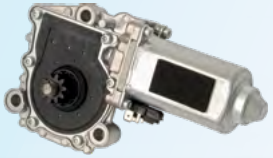

118220

Motor → window lifter, left
24 V

VoR

3176549
1062010

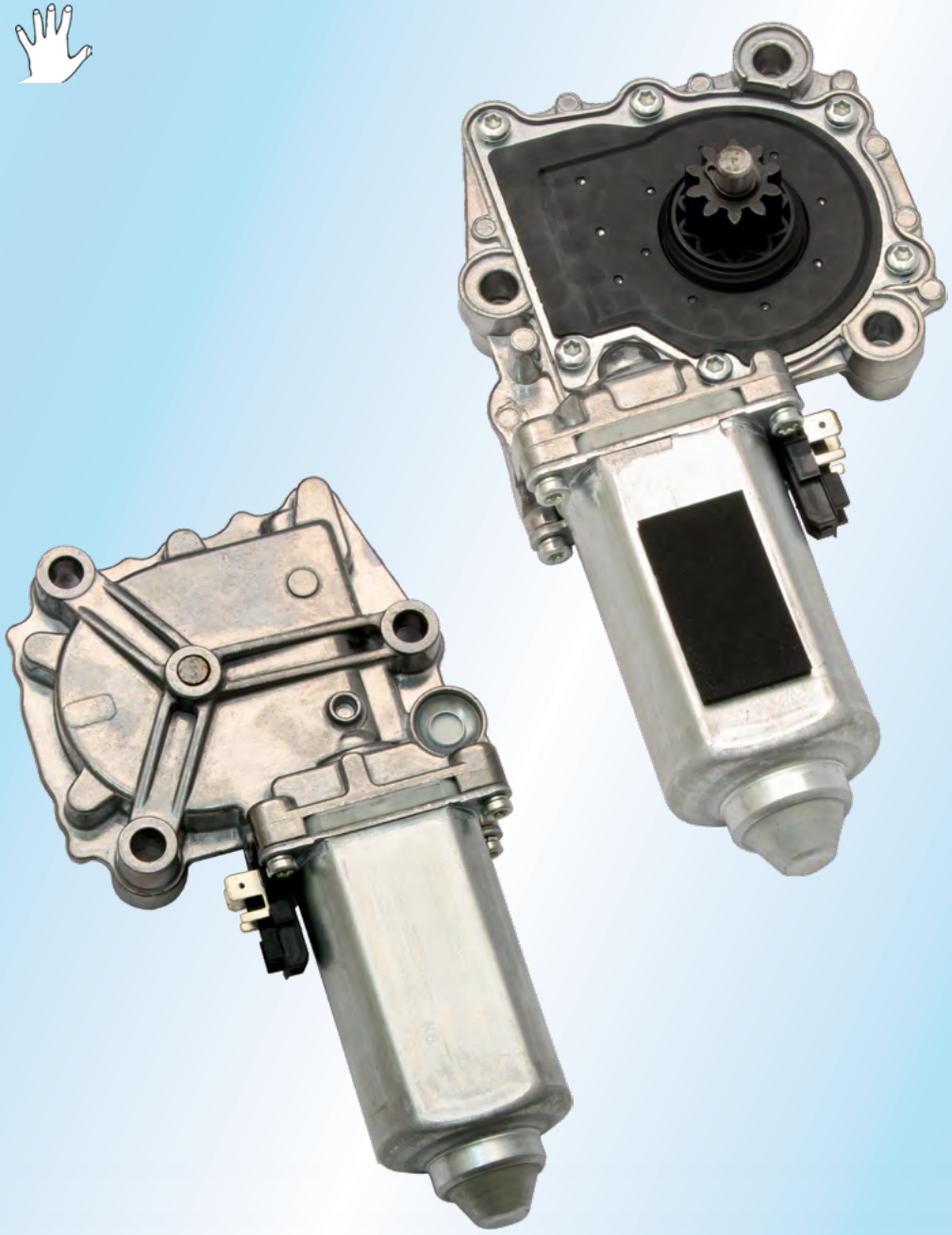

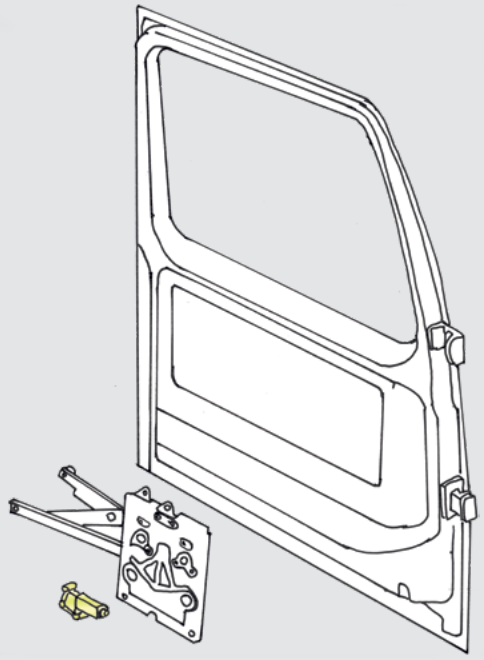

FH 09/2005 - 09/2012
FH 12/16 1995 - 09/2005

FM (4) 09/2012→
FM 09/2005 - 09/2012
FM 7/9/10/12 1998 - 09/2005

LHD RHD

Suitable lifter:
HD 118210



kg 0,94

118221

Motor → window lifter, right
24 V

VoR

3176550
1062011

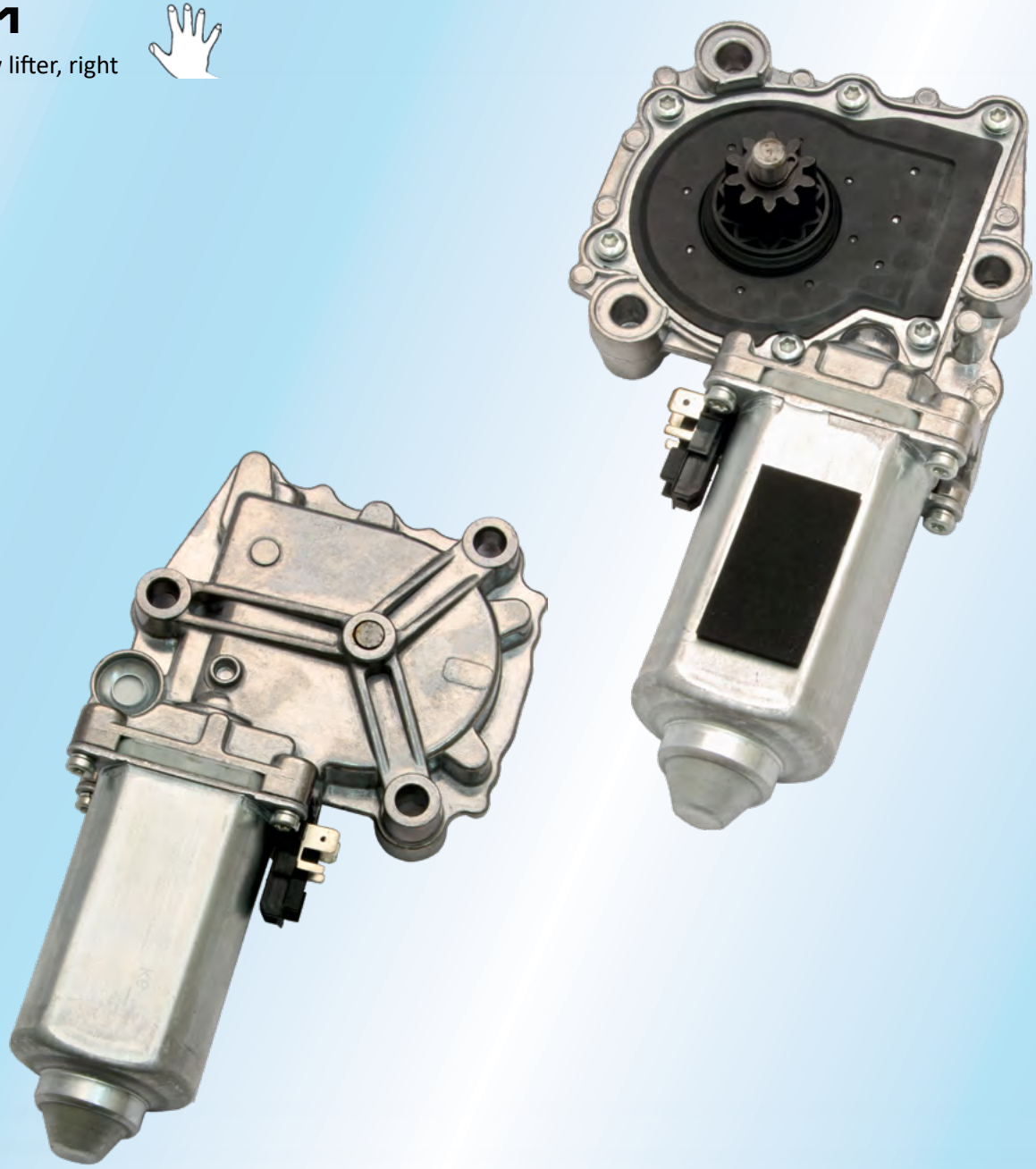

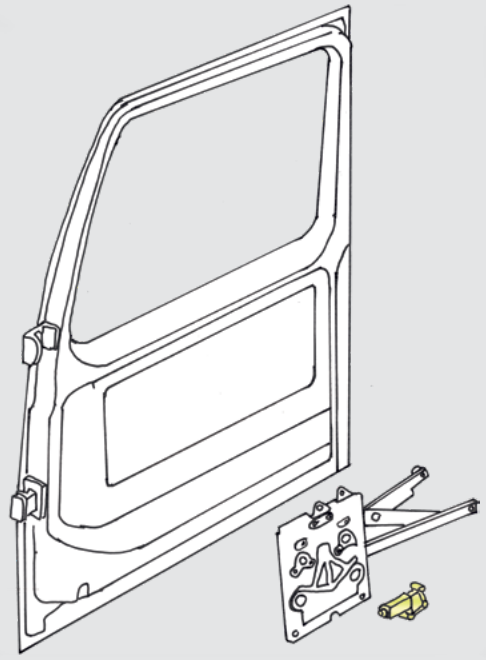

FH	09/2005 - 09/2012
FH 12/16	1995 - 09/2005
FM (4)	09/2012→
FM	09/2005 - 09/2012
FM 7/9/10/12	1998 - 09/2005

LHD RHD

Suitable lifter:
HD 118211



kg 0,99

118040

Motor → window lifter, Left

VoR

84062947
82907379

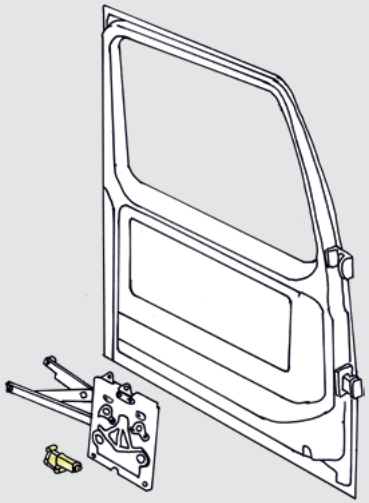

FH (4) 09/2012→

Left side motor is not yet in our product selection







kg 0,63

118041

Motor → window lifter, Right

VoR **82907373**



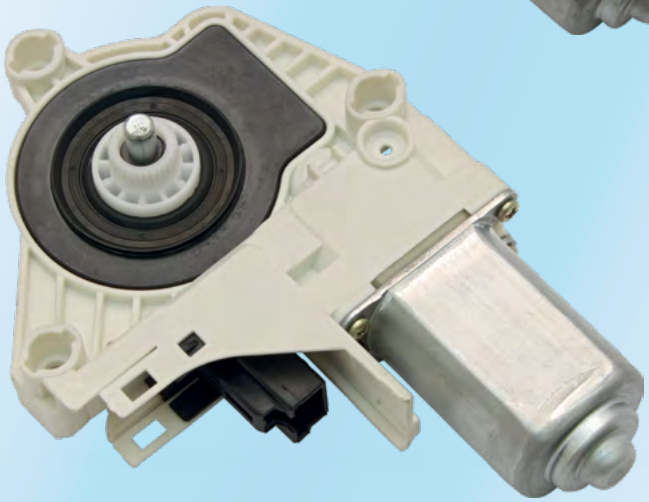

118106

Door lock & key set (Left & Right)

VoR **3090483**

Material: Metal





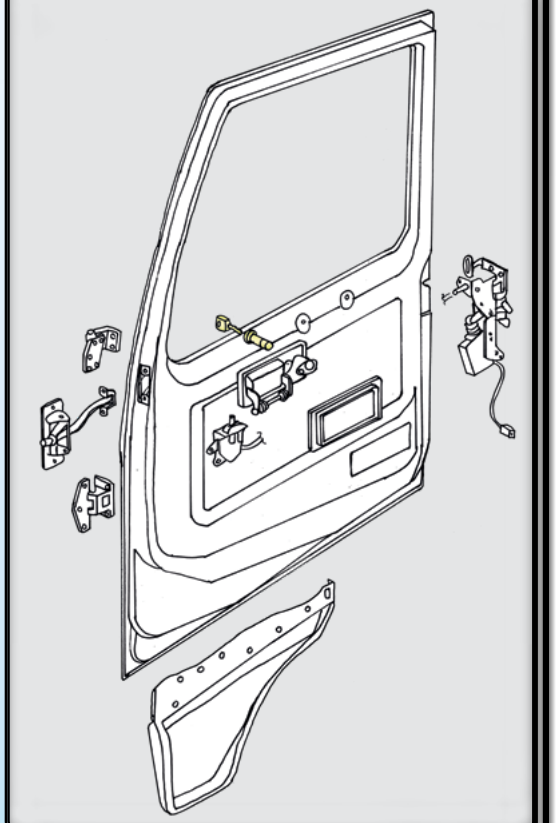

kg 0,12

Suits for door handle:

HD

118104
118105



FH	09/2005 - 09/2012
FH 12 / 16	1993 - 09/2005
FM (4)	09/2012 →
FM	09/2005 - 09/2012
FM 9 / 12	09/2003 - 09/2005
FM 7 / 10 / 12	1998 - 09/2003

118244

Bracket → Front grille lock

VoR **82055584**

Material: Steel

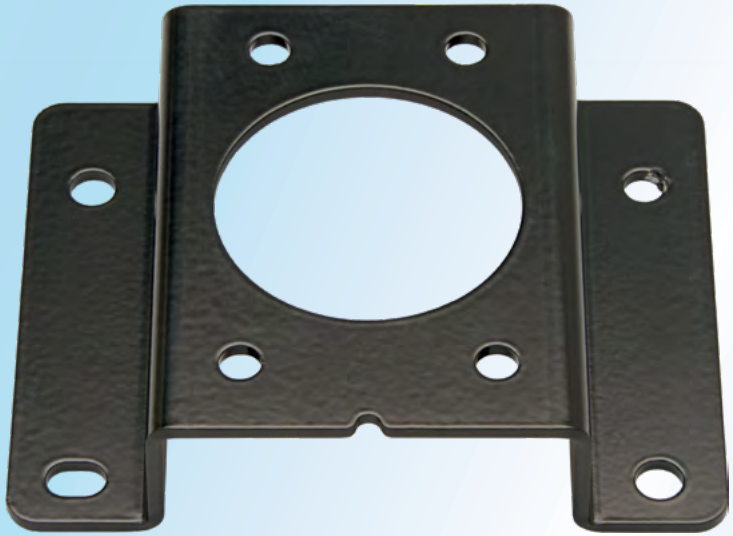

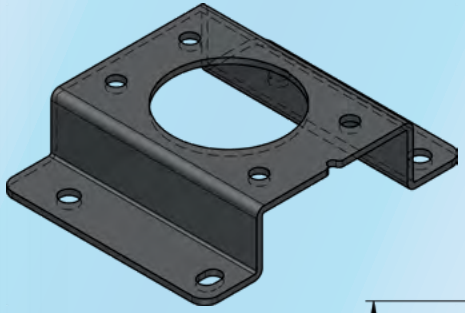

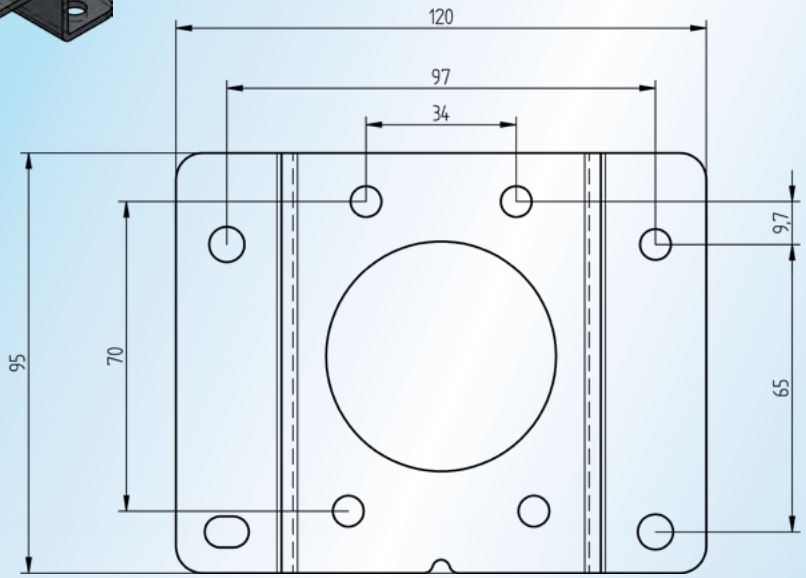

kg 0,28

→ Front grille lock

HD 118245

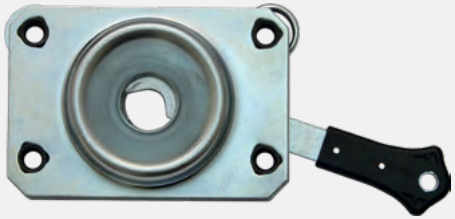

Locking pin → front grille lock

HD 118240

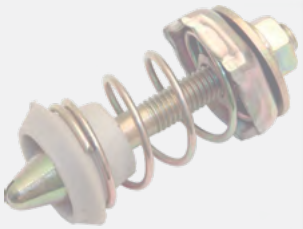

FH	09/2005 - 09/2012
FM (4)	09/2012 →



118240

Lock pin → Front grille locking, male

VoR

82361778
20410984
21298273

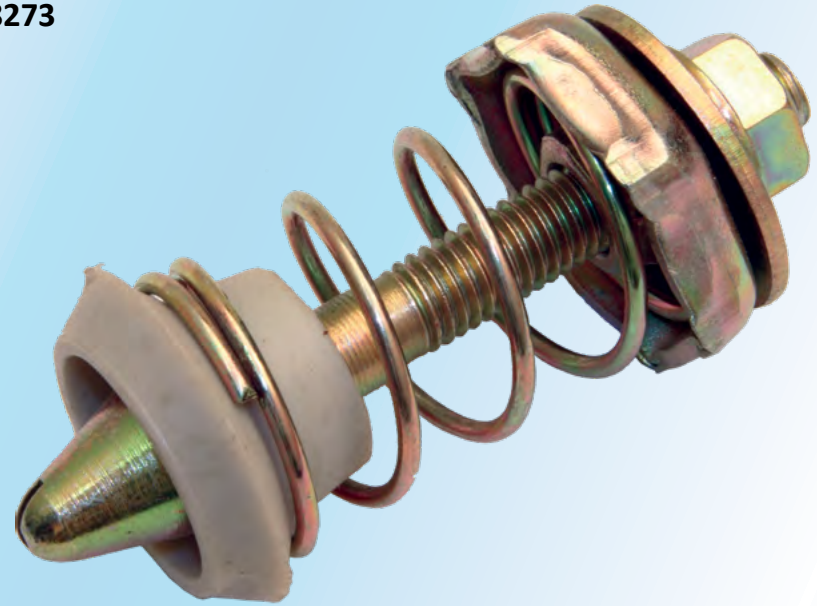

kg 0,09

2 /

FH (4)	09/2012→
FH	09/2005 - 09/2012
FH 12/16	→09/2005
FM (4)	09/2012→
FM	09/2005 - 09/2012
FM 9/12	→09/2005

118245

Front grille lock, female

VoR **20425414**

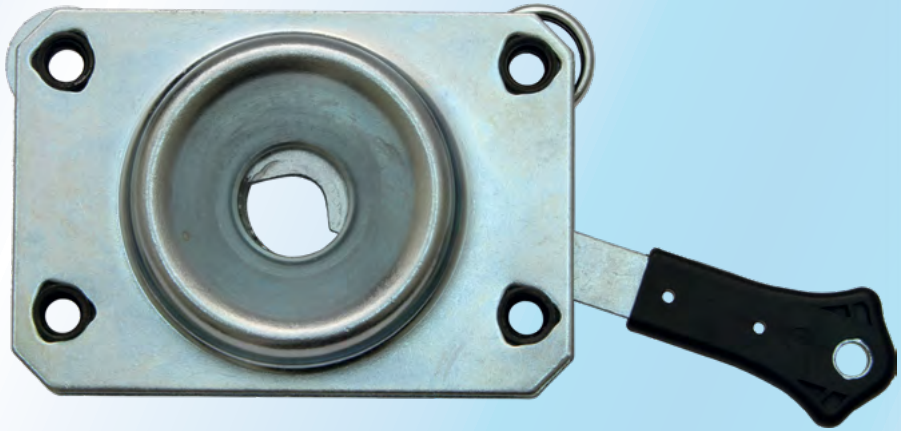

kg 0,2

2 /

FH	09/2005 - 09/2012
FH 12/16	01/2002 - 09/2005
FM (4)	09/2012→
FM	09/2005 - 09/2012
FM 9/12	→09/2005

2 /

B5LH, B7R, R7/LE
B9L, B9R
7500 / 7700 / 8500
B12B, B12M

118424

Filler neck assy



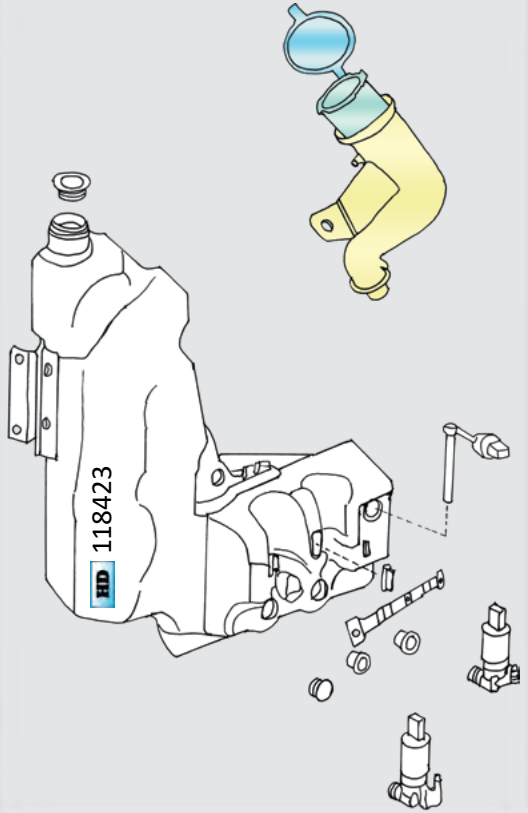

VoR

82828413 Filler neck assy

21643741 Cover
82474756 Filter
82827651 Neck



kg 0,12

FM (4)

09/2012→

118423

Washer tank

VoR With 2 pump holes:

84092257
84080993
84092259
84024488

VoR With 1 pump hole:

84092259
84080999
84024486
84024448



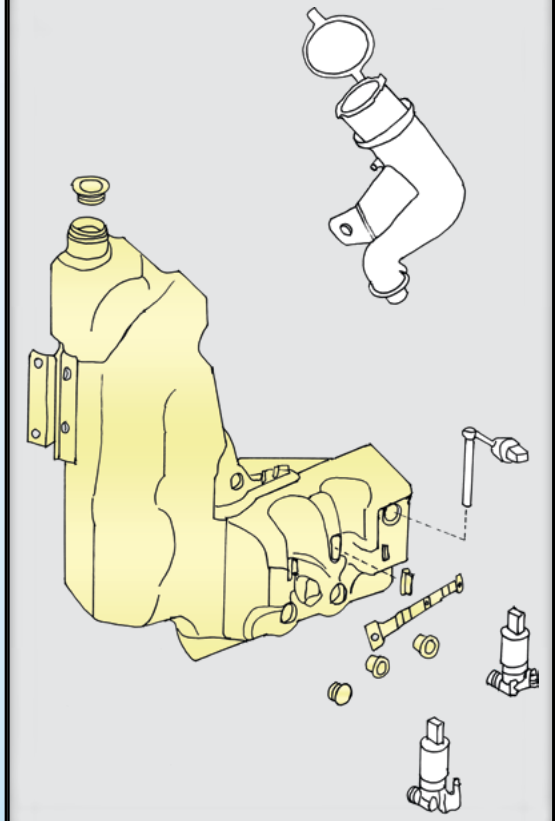

VoR Wiper tank contain:

84092257 x 1 Tank
82268668 x 1 Seal
82290472 x 1 Bracket
84150678 x 1 Belt
82229555 x 2 Grommet
HD **118416** x 1 Plug

kg 3,6

FH (4)	09/2016→
FM (4)	09/2016→

When only 1 pump is in use, install included plug HD 118416.

118420

Sensor → washer tank water level

VoR

84468335
82289560



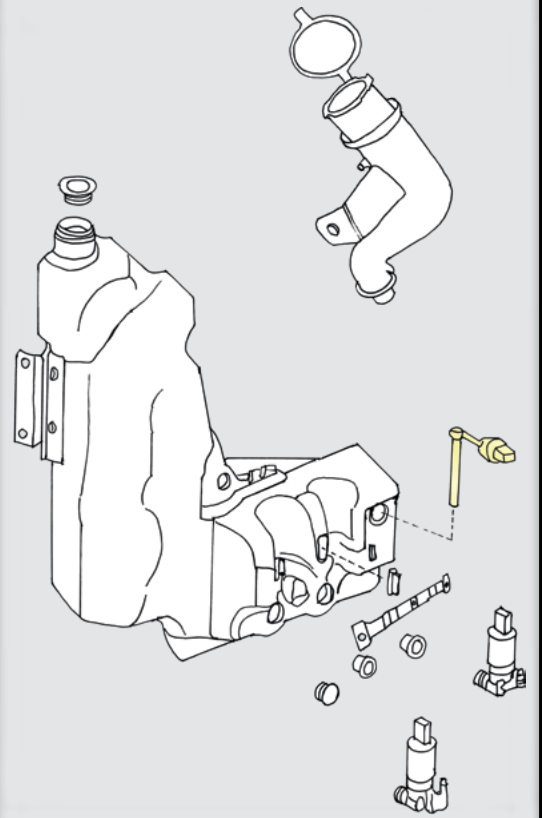

kg 0,1

FH (4)	09/2016→
FM (4)	09/2016→

118431

Washer pump → Windshield

VoR

84081002
82171135
84027293

Renault R

7484081002
7482171135







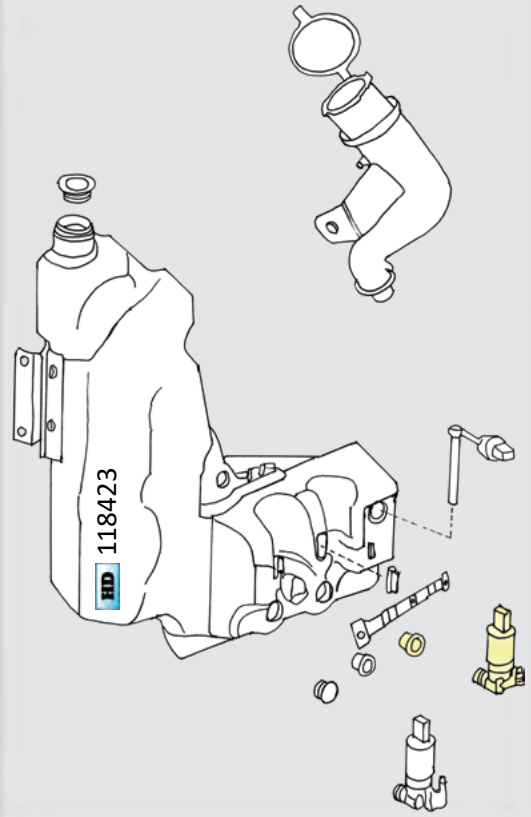

FH (4)	09/2016→
FM (4)	09/2016→

kg 0,17

Washer pump → Headlamp: HD 118435

118435

Washer pump → Headlamps

VoR

84081004
82292330
84027324

Renault R

7484081004
7482292330







kg 0,17

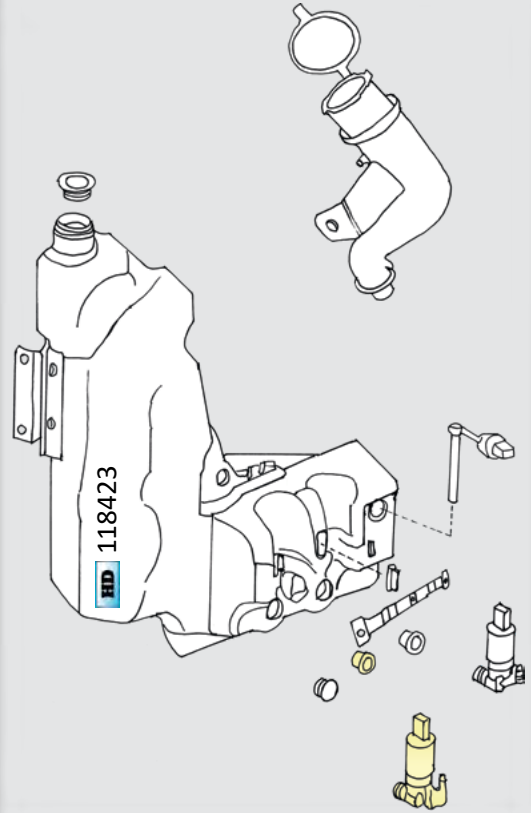

FH (4)	09/2016→
FM (4)	09/2016→

Washer pump → Windshield: HD 118431

118430

Washer pump → windscreen

VoR

21189159
20747536
20409793
8189170
3980681





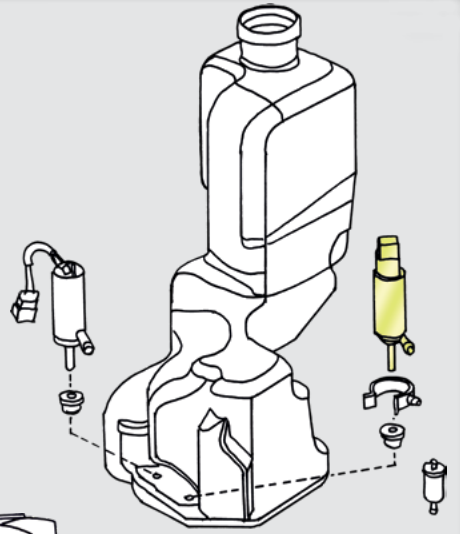

FH	09/2005 - 09/2012
FH 12/16	1995 - 09/2005
FM (4)	09/2012→
FM	09/2005 - 09/2012
FM 7/9/10/12	1998 - 09/2005

LHD RHD

kg 0,12

118448

Wiper motor 24 V

VoR 20442878







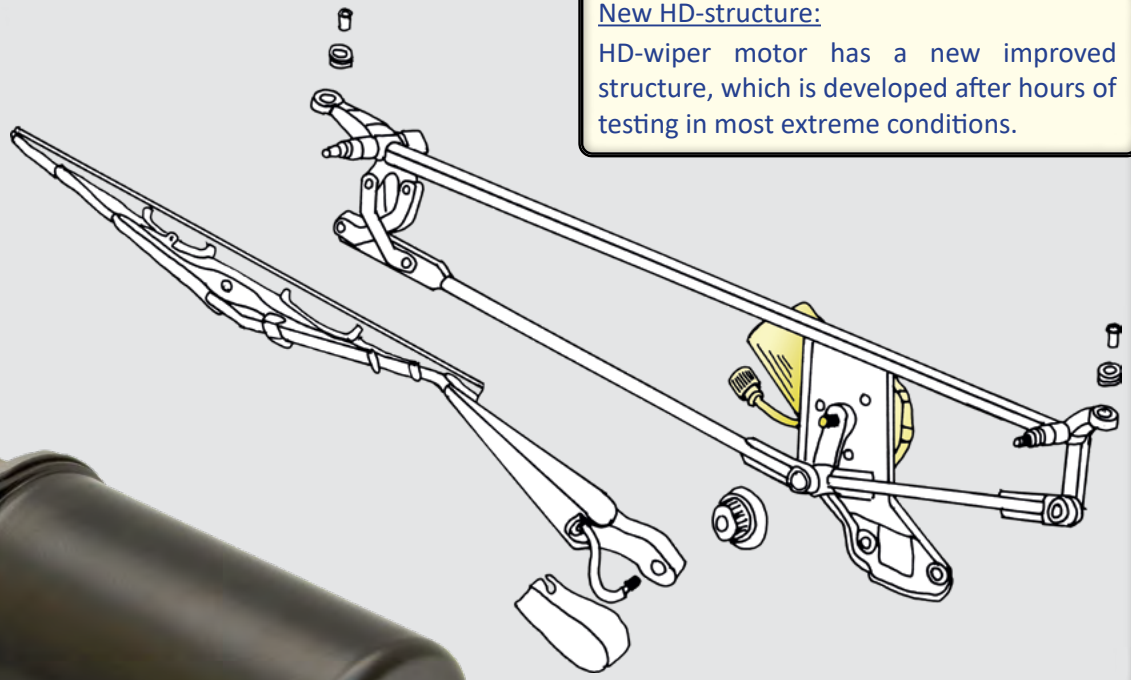

New HD-structure:
HD-wiper motor has a new improved structure, which is developed after hours of testing in most extreme conditions.

LHD

RHD = VoR 20442879

kg 1,8

FH	09/2005 - 09/2012
FH 12/16	1995 - 09/2005
FM	09/2005 - 09/2012
FM 9/12	09/2003 - 09/2005
FM 7/10/12	1998 - 09/2003

B8R (3), B5LH (3)
B7R, B9 L/S/R, B12B/M

118449

Wiper motor 24 V



VoR

84194648
82907420

VoR Assembly

84194650

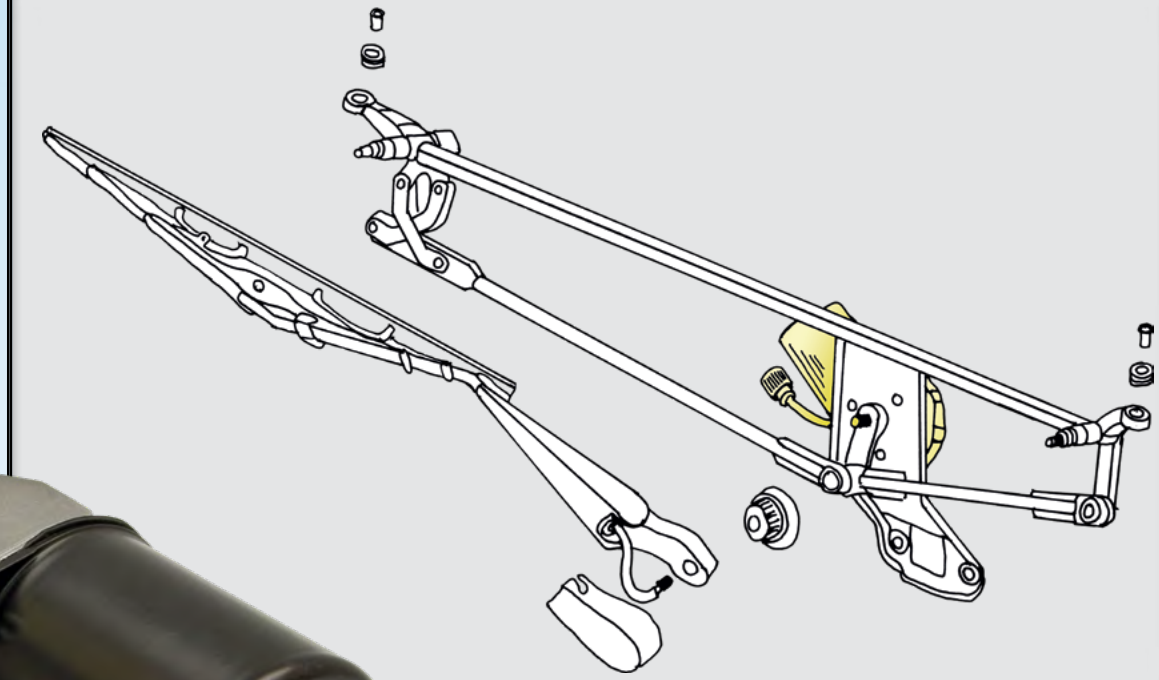

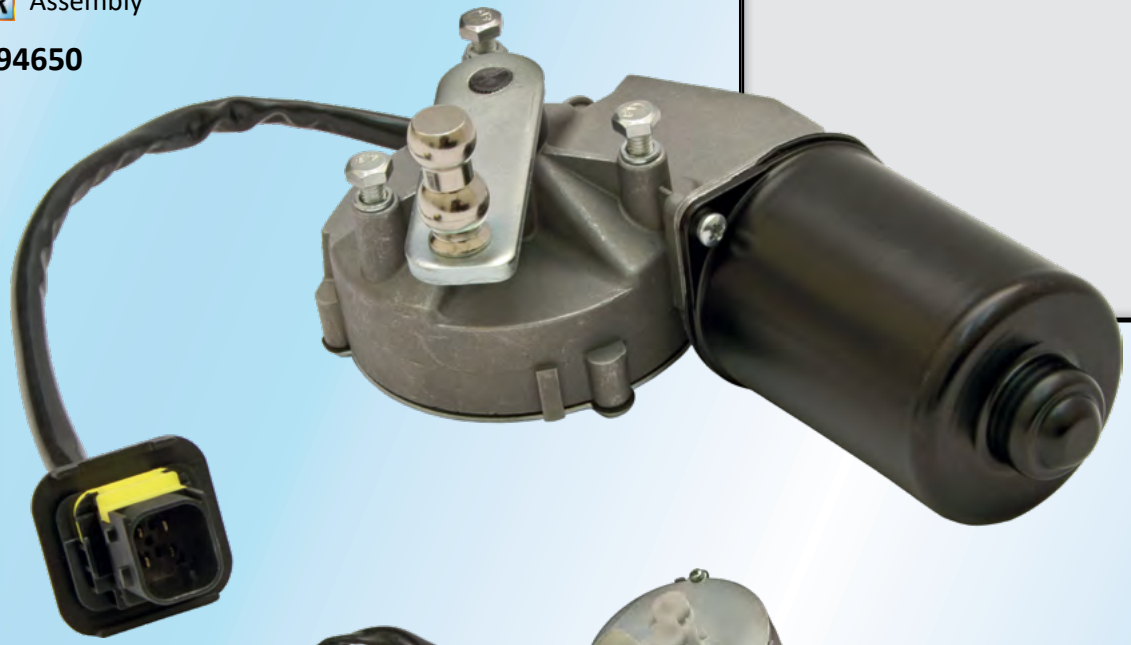



LHD

kg 1,8

FH (4) 09/2012→ LHD

FM (4) OE = 84092304 LHD

118454

Wiper arm

VoR

82214988
82485664

kg 0,78





FH (4)	05/2012→

118455

Wiper arm

VoR

8189632
8191297

kg 0,53



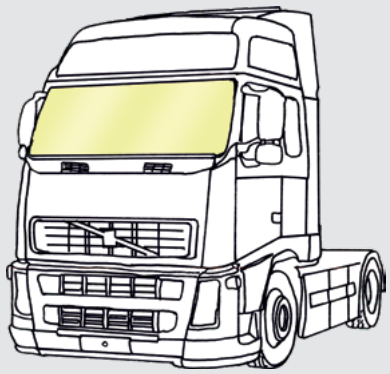



FH	09/2005 - 09/2012
FH 12	1995 - 09/2005
FM (4)	09/2012→
FM	09/2005 - 09/2012
FM 9/12	09/2003 - 09/2005
FM 7/10/12	1998 - 09/2003



All wiper blades are at Scania 18 section.

Suitable wiper blade: 650 mm

318473



118730

Sensor valve → cabin level

VoR

20531967
3198233
8141934

Reference numbers:

Wabco **464 007 003 0**



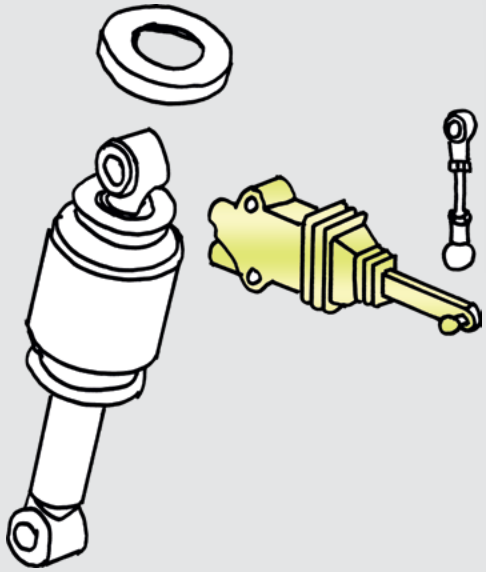

FH	09/2005 - 09/2012
FH 12/16	1995 - 09/2005
FM	09/2005 - 09/2012
FM 9/12	09/2003 - 09/2005
FM 7/10/12	1998 - 09/2003

kg 0,38

118731

Sensor valve → cabin level

VoR **20531965**

Reference numbers:

Wabco **464 007 019 0**



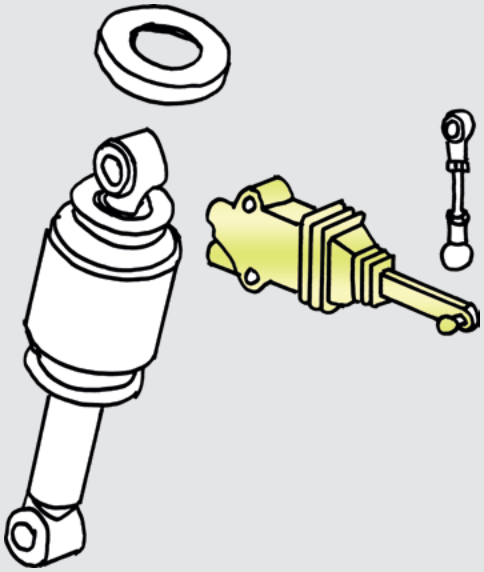

FH	09/2005 - 09/2012
FH 12/16	01/2002 - 09/2005
FM	09/2005 - 09/2012
FM 9/12	01/2002 - 09/2005

kg 0,39

118732

Sensor with fittings → Cabin level

VoR 21304773

Reference numbers:

Wabco **464 007 025 0**

Materials:

Valve body: Aluminium
Fittings: Brass



HD 315000

Replaces Raufoss reference:
931 40 010
Color code: white

Threads: M10 x 1,0 mm

kg 0,52

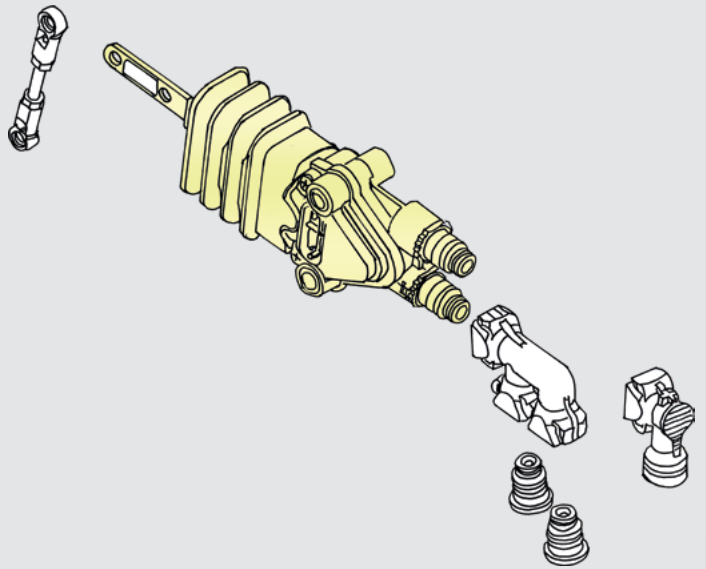

FH (4)	09/2012 →
FM (4)	09/2012 →

118704

Bump stop kit

VoR

21333684 +
21333686 +
1075814



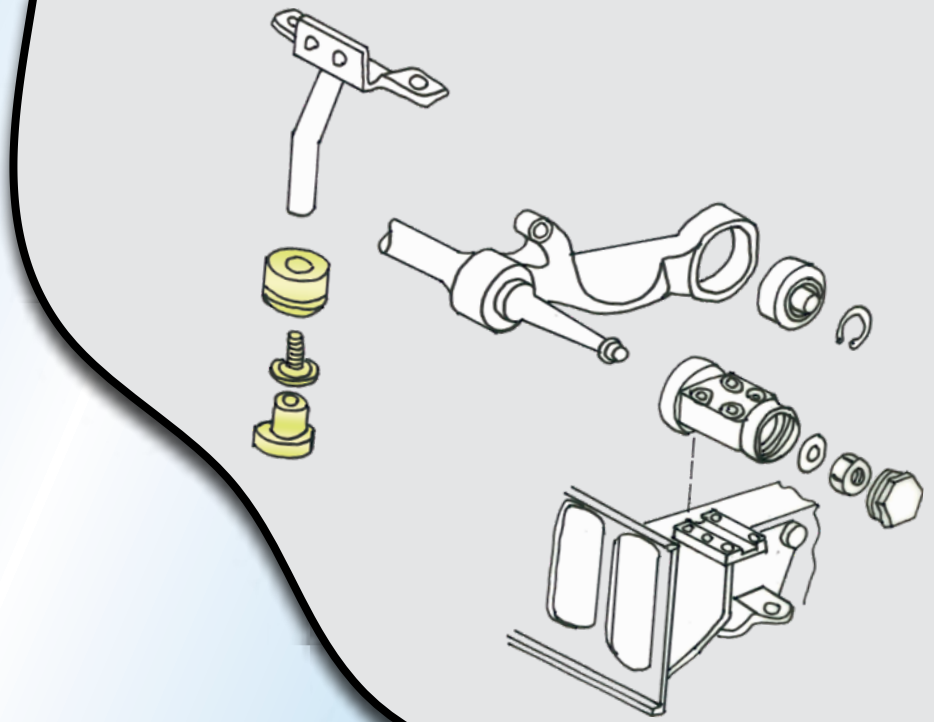

FH, FH12/16

FH12/16 A544696→

FM, FM9/12

FM9/12 A544696→

01/2002→

kg 0,40

118738

Bump stop kit → Cabin anti-roll bar

VoR

21833916 +
21333686

Materials:
- Rubber
- Steel



kg 0,33

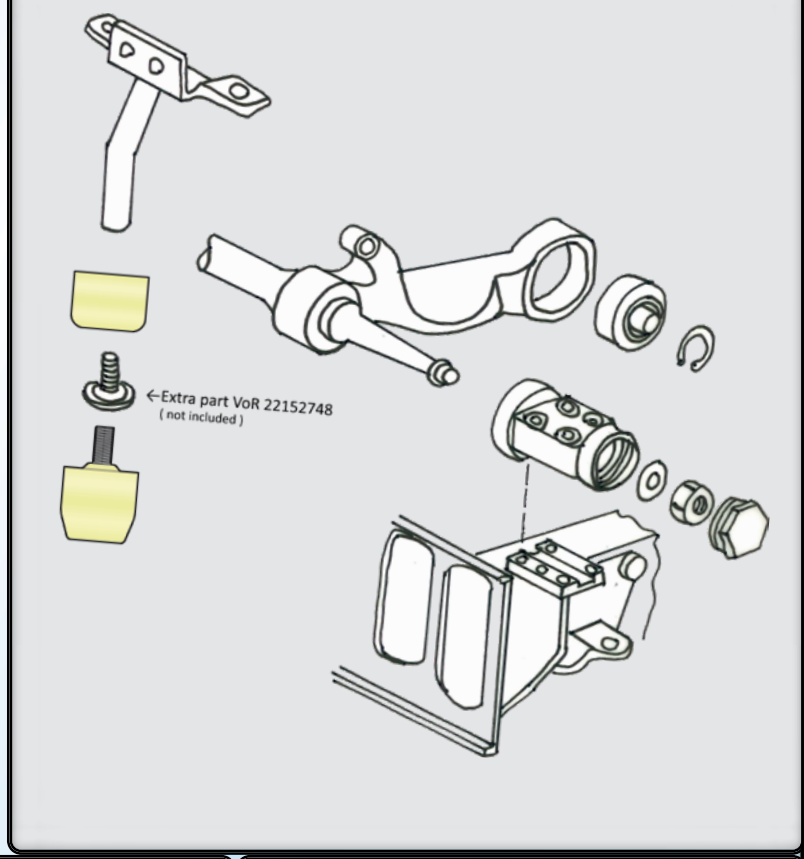

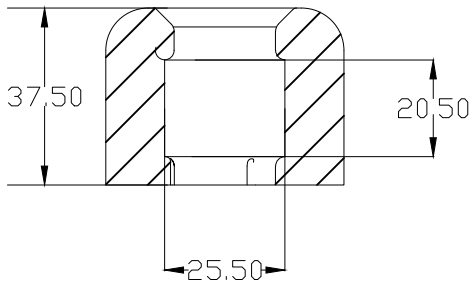

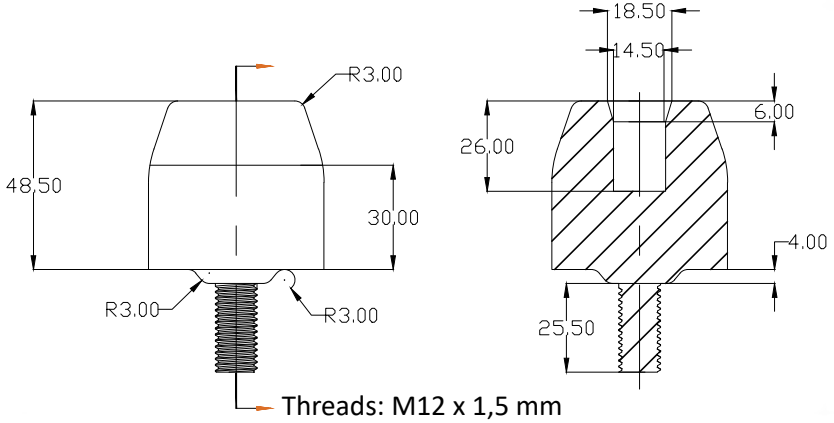

Threads: M12 x 1,5 mm

FH (4)	09/2012 →
FM (4)	09/2012 →
FM (4)	09/2012 →

When Volvo dynamic steering in use
(Active steering system with torque overlay)
Use extra part support VoR 22152748

118700

Bracket for cabin anti-roll bar

VoR **1076745**

Material: Cast iron

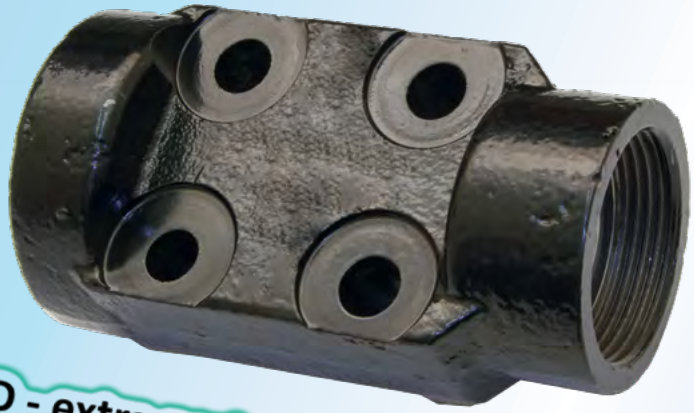



21 x 37 x 2,5 mm

HD - extra parts



M20 x 1,5 mm

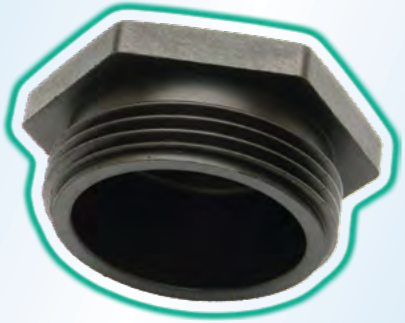

M56 x 3 mm



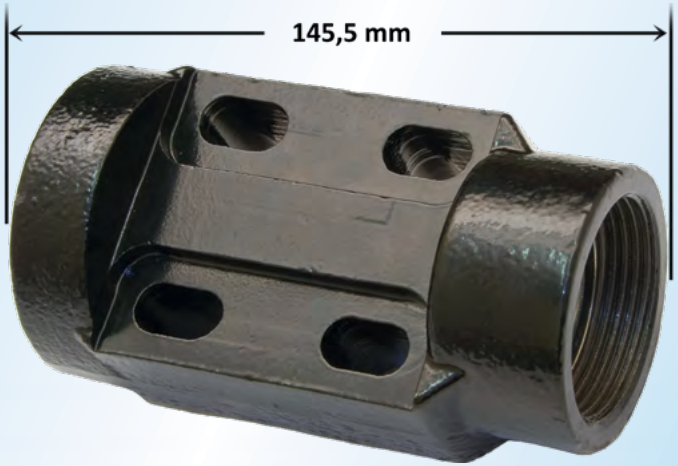

kg 2,4

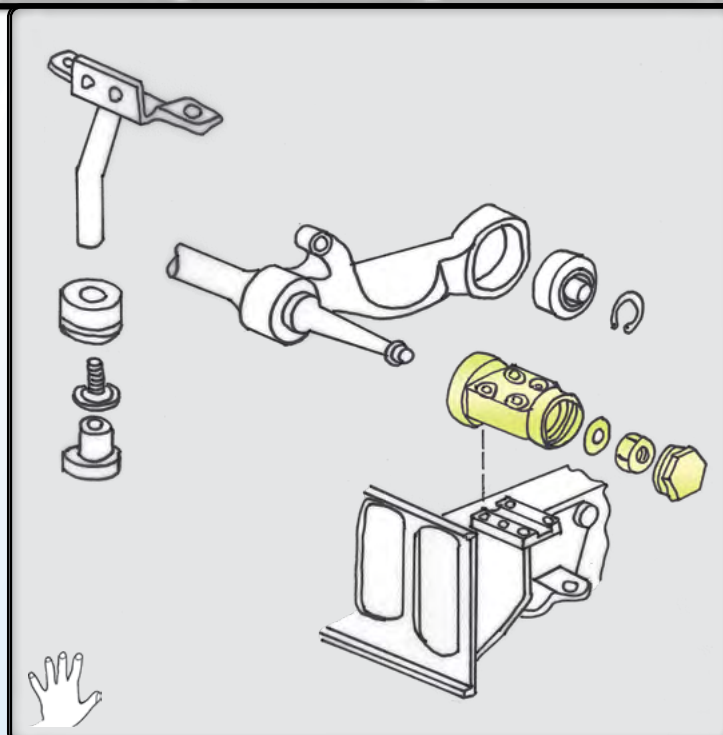

FH		09/2005 - 09/2012
FH 12/16		09/2003 - 09/2005
FH 12	A544696 - A572083	01/2002 - 09/2003
FM		09/2005 - 09/2012
FM 9/12		09/2003 - 09/2005
FM 12	A287349 - A572083	→09/2003
FM 9	A542185 - A572083	→09/2003
FM 10	A295777 - A544696	→01/2002
FM 7	A287346 - A544696	→01/2002

Bearings that are inside the brackets are not recommended to be renewed. Please also change the brackets from both sides of the vehicle at the same time.

118701

Bracket for cabin anti-roll bar

VoR **1076746**

Material: Cast iron





21 x 37 x 2,5 mm

HD - extra parts



M20 x 1,5 mm

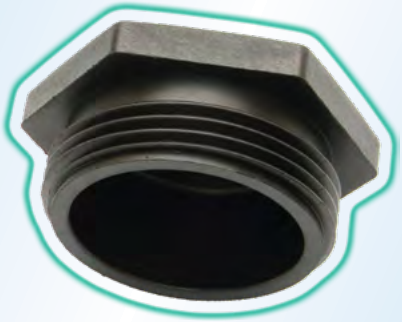

M56 x 3 mm



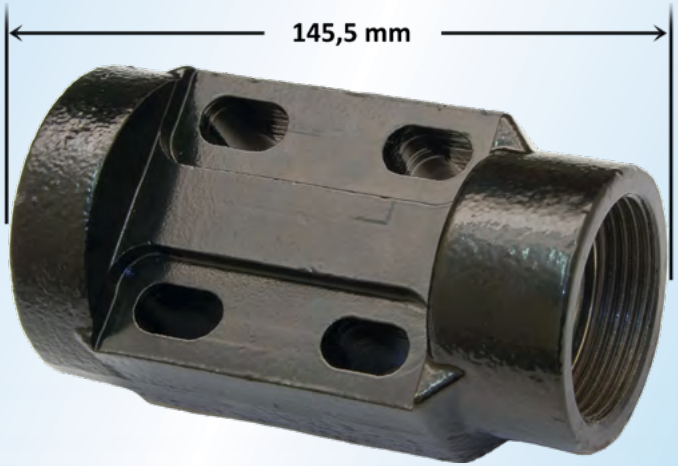

kg 2,4

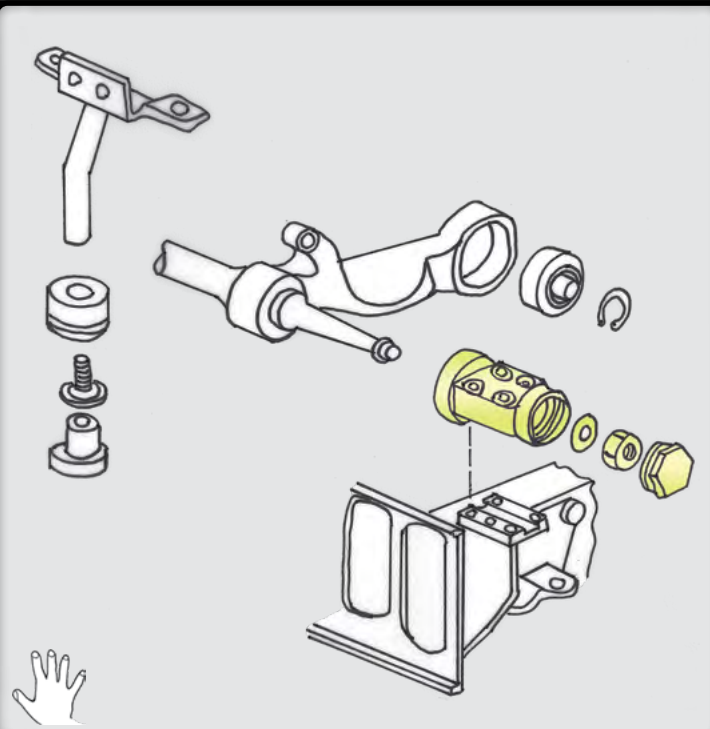

FH		09/2005 - 09/2012
FH 12/16		09/2003 - 09/2005
FH 12	A544696 - A572083	01/2002 - 09/2003
FM		09/2005 - 09/2012
FM 9/12		09/2003 - 09/2005
FM 12	A287349 - A572083	→09/2003
FM 9	A542185 - A572083	→09/2003
FM 10	A295777 - A544696	→01/2002
FM 7	A287346 - A544696	→01/2002

Bearings that are inside the brackets are not recommended to be renewed. Please also change the brackets from both sides of the vehicle at the same time.

118740

Bracket → Cabin anti-roll bar, left

VoR 21817833



kg 2,47

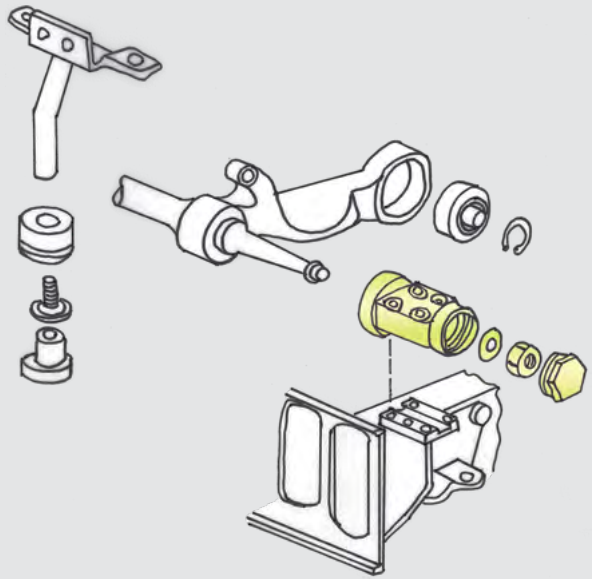

FH (4)	09/2012 →
FM (4)	09/2012 →

Bearings that are inside the brackets are not recommended to be renewed. Please also change the brackets from both sides of the vehicle at the same time.

118741

Bracket → Cabin anti-roll bar, right

VoR 21817834





kg 2,30

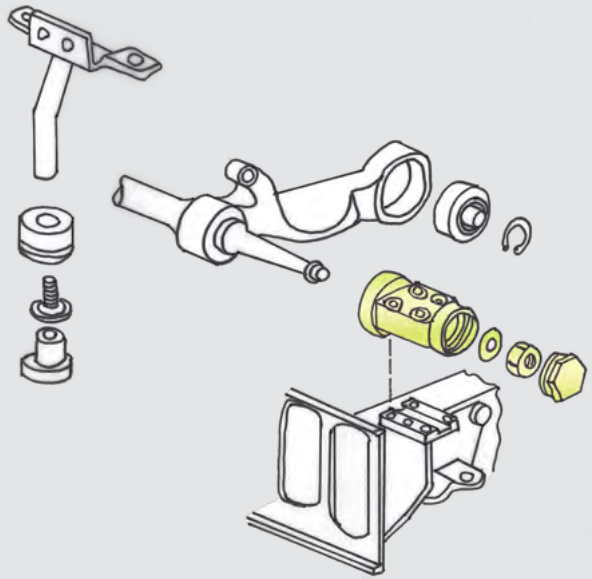

FH (4)	09/2012 →
FM (4)	09/2012 →

Bearings that are inside the brackets are not recommended to be renewed. Please also change the brackets from both sides of the vehicle at the same time.

118922

Fan motor with wings and housing

VoR With housing

20926019
20443822
20443820

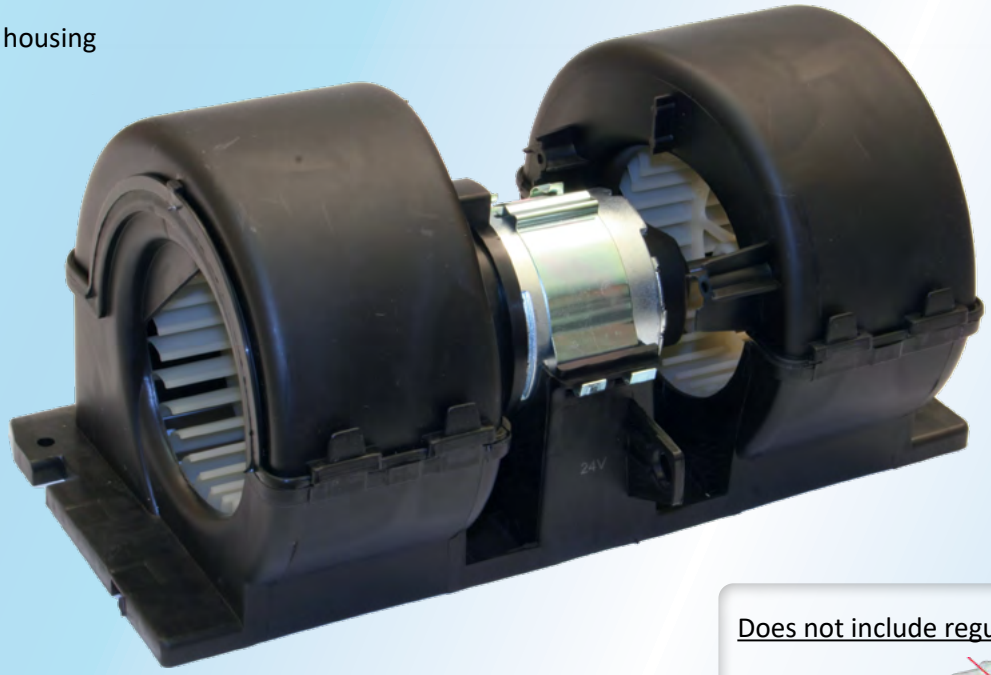

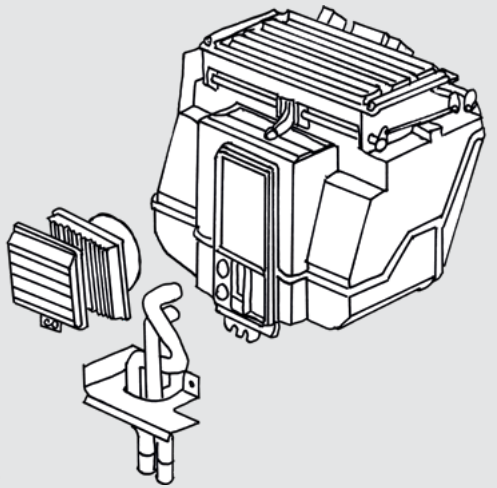

kg 2,18

Does not include regulator:

HD 118924



FH	09/2005 - 09/2012
FH 12/16	1995 - 09/2005
FM	09/2005 - 09/2012
FM 9/12	09/2003 - 09/2005
FM 7/10/12	1998 - 09/2003

118924

Regulator control

VoR

20852837
20853484
20443824



kg 0,2

118925

Fan motor assy
1. Earlier design
Air intake, straight grille

VoR

84223449
82349000

Renault R **74 84 223 449**





kg ?

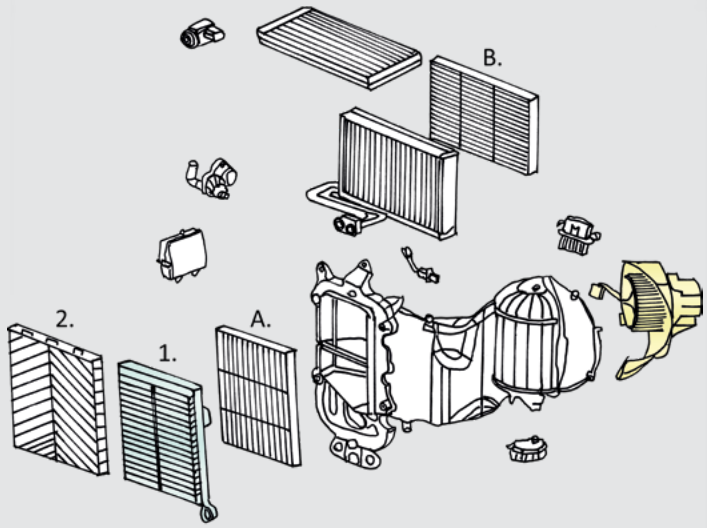

1. - Old design, straight grille on the cover
2. - New design, oblique grille on the cover
A. - Outside
B. - Inside

FH (4) 08/2012→

MCC Manual controlled climate control air condition.
ECC Electronic controlled climate control air condition.
ECC2 Electronic controlled climate control air condition. (2. generation)

1. Earlier design
Air intake, straight grille

FM (4)

118799

Sensor → Cabin lock

VoR 20382529

Renault R 7420382529

Material: Plastic



kg 0,08

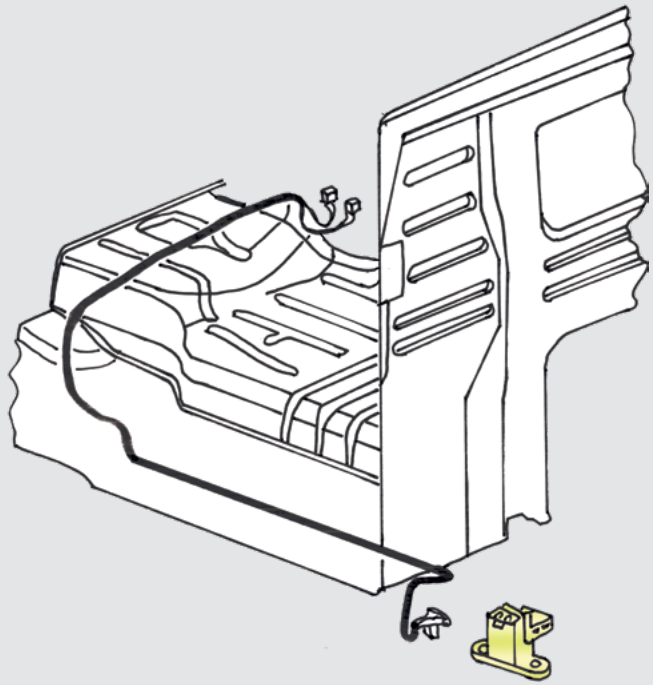

FH (4)	09/2012→
FH	09/2005 - 09/2012
FH 12/16	01/2002 - 09/2005
FM (4)	09/2012→
FM	09/2005 - 09/2012
FM 9/12	01/2002 - 09/2005

Renault

118910

Cab air filter
Outside

VoR

21758906
8143691

ManR **CU2184**

Material:
Filter paper

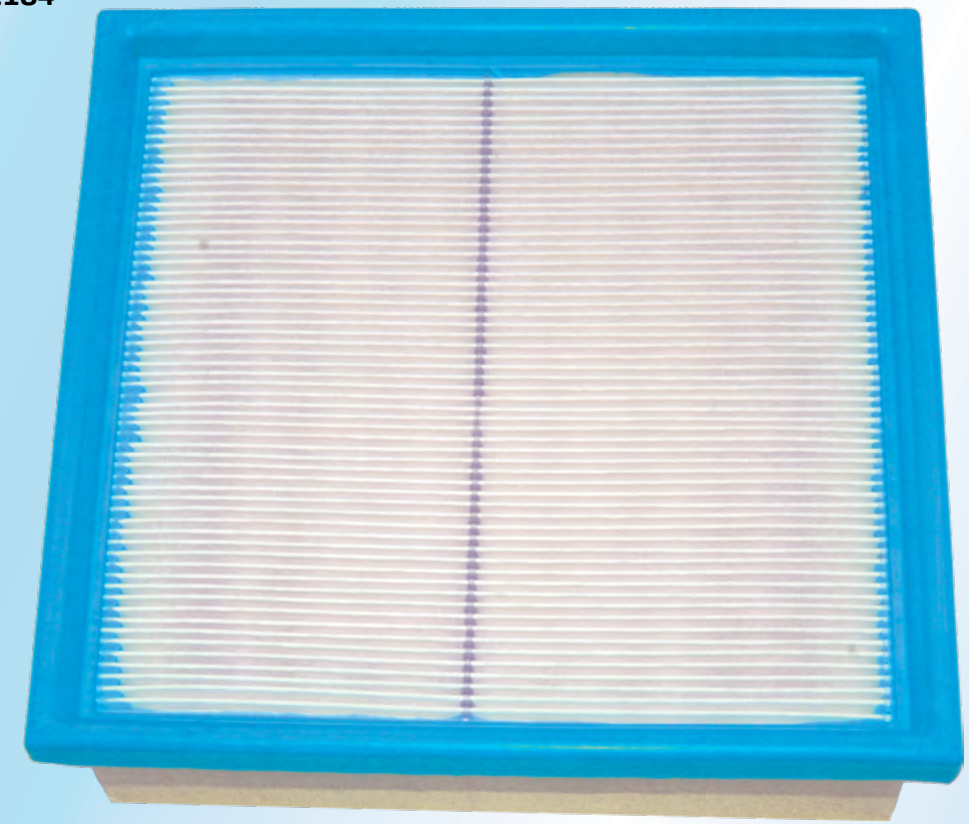

210 x 210 x 50 mm

kg 0,27

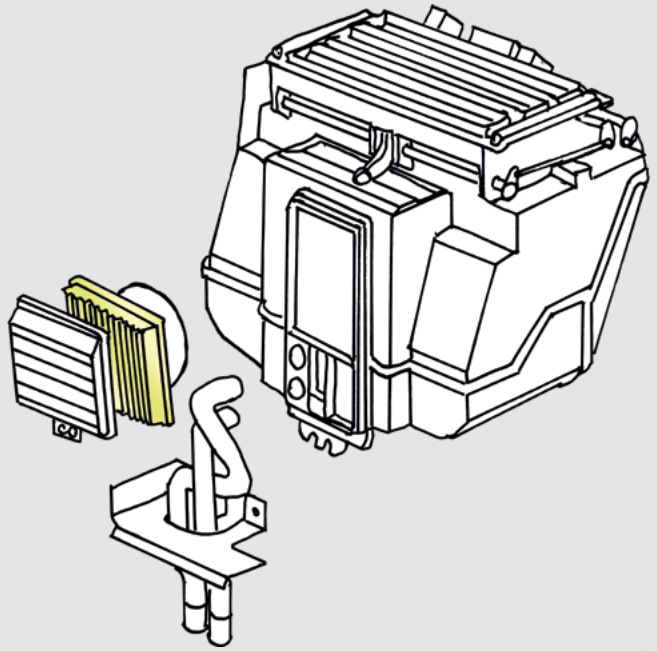

FH	2005 - 09/2012
FH 12/16	1995 - 09/2005
FM (4)	09/2012→
FM	2005 - 09/2012
FM 9/12	1998 - 2005

MCC Manual controlled
ECC Electronic controlled
ECC2 Electronic controlled (2. generation)

FH (4)

118913

Cab air filter
A. Outside
1. Old design (Straight grille on the cover)

VoR

23515346
82354791

Renault R **74 82 379 897**

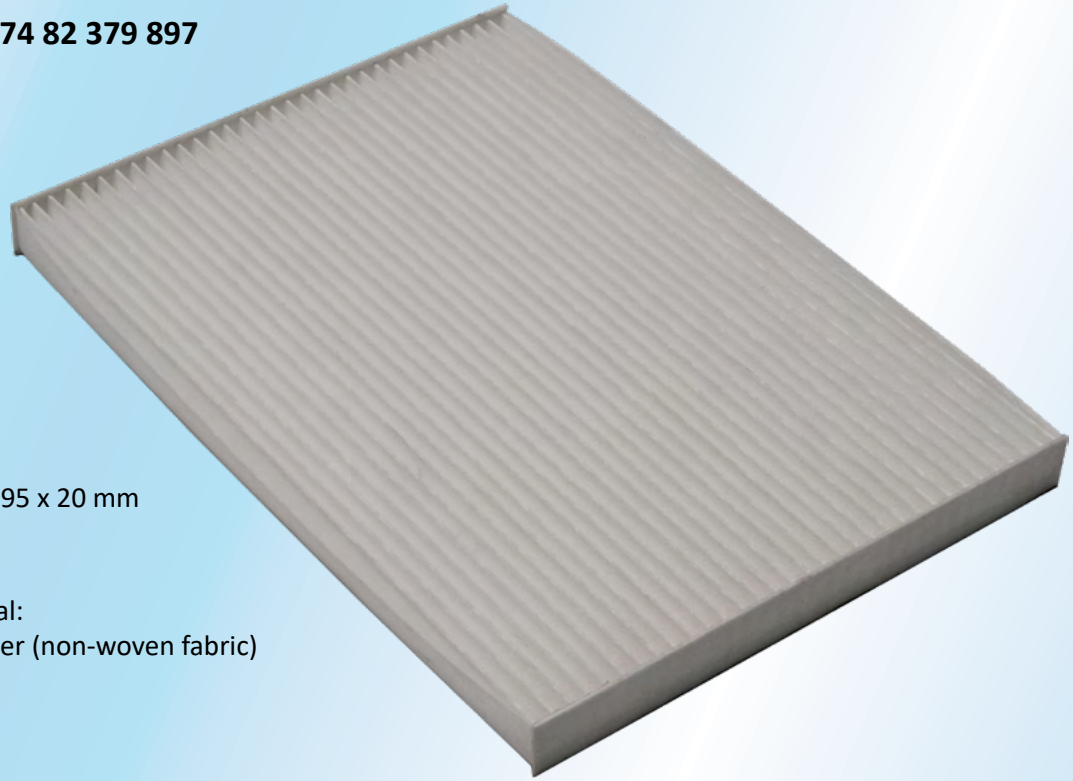

271 x 195 x 20 mm

Material:
Polyester (non-woven fabric)

kg 0,14

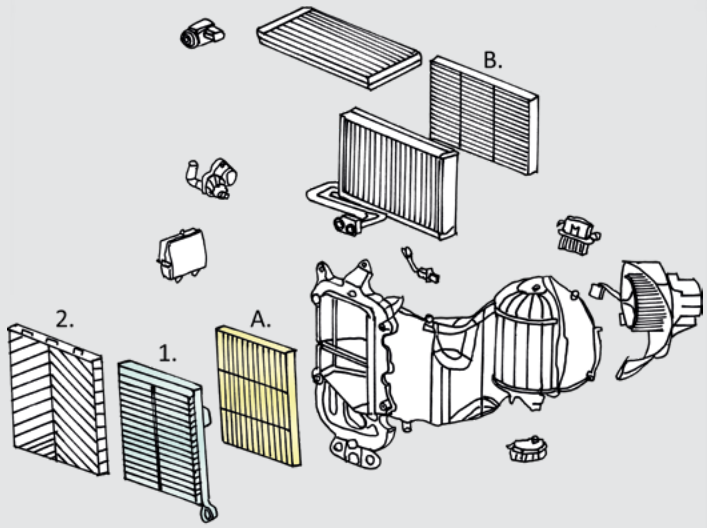

1. - Old design, straight grille on the cover
2. - New design, oblique grille on the cover
A. - Outside
B. - Inside

FH (4)	09/2012→
FMX II	09/2013→

MCC Manual controlled climate control air condition.
ECC Electronic controlled climate control air condition.
ECC2 Electronic controlled climate control air condition. (2. generation)

FM (4) → 118910 VoR 21758906 A.outside

118914

Cab air filter
B. Inside
1. Old design (Straight grille on the cover)
2. New design (Oblique grille on the cover)

VoR

23515329
82348995

Renault R **74 82 348 995**

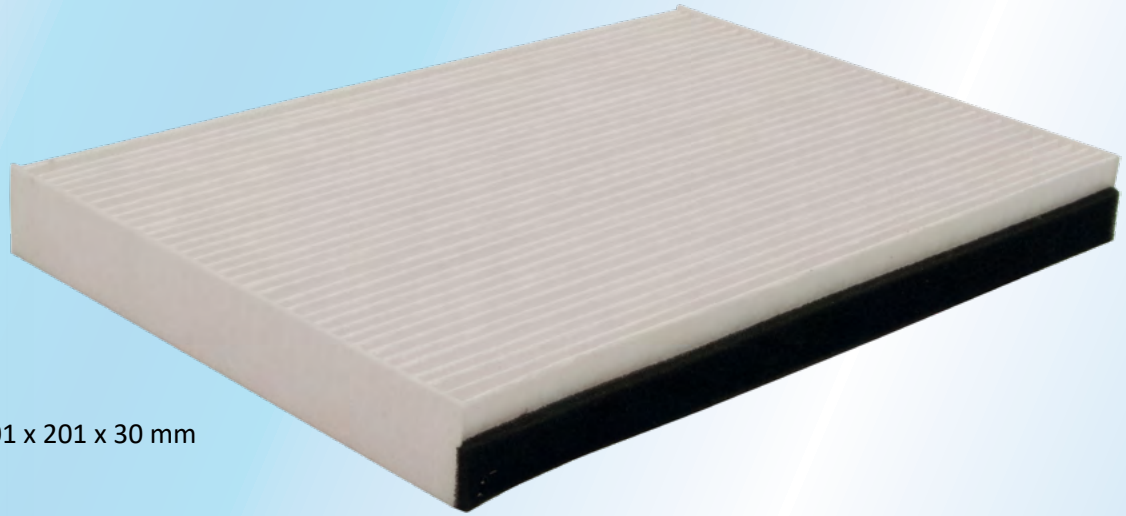

301 x 201 x 30 mm

Material:
Polyester (non-woven fabric)

kg 0,21

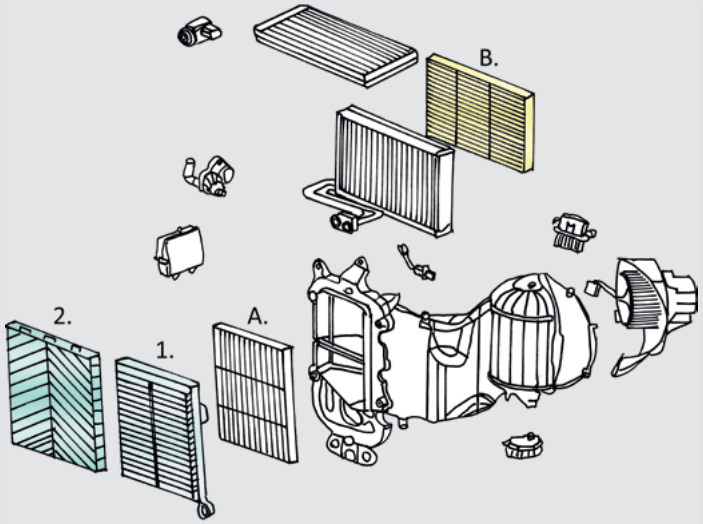

1. - Old design, straight grille on the cover
2. - New design, oblique grille on the cover
A. - Outside
B. - Inside

FH (4)	09/2012→
FMX II	09/2013→

MCC Manual controlled climate control air condition.
ECC Electronic controlled climate control air condition.

FM (4) → 118910 VoR 21758906 A.outside

118915

Cab air filter
A. Outside
2. New design (Oblique grille on the cover)

VoR **84813190**

Material:
Polyester (non-woven fabric)

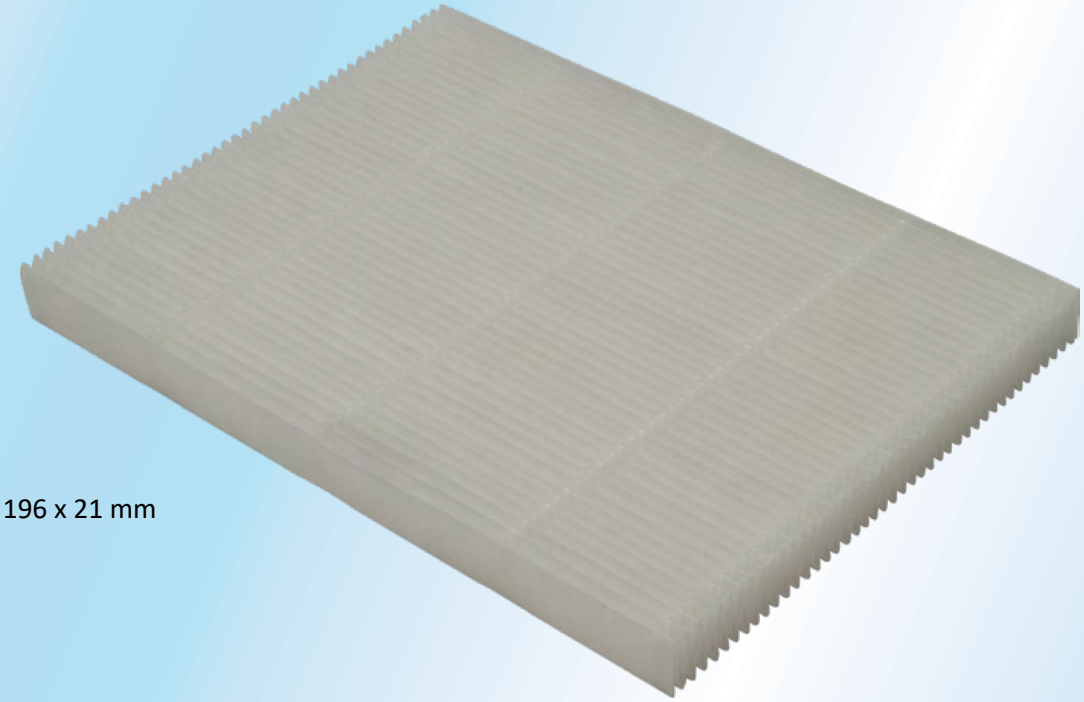

265 x 196 x 21 mm

kg ?

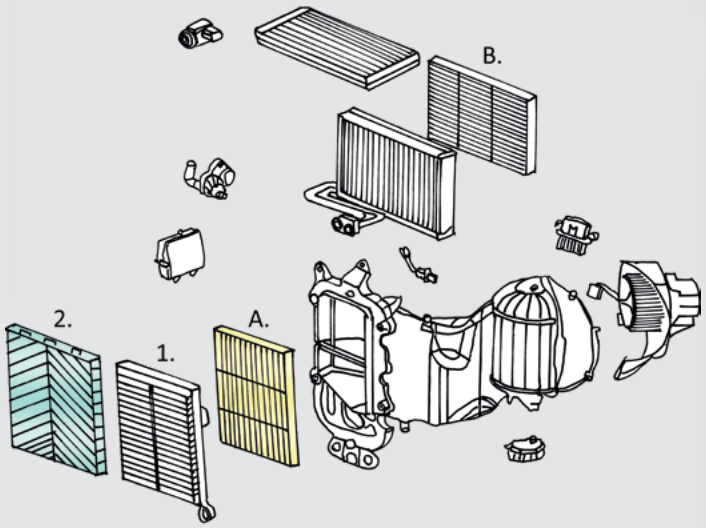

1. - Old design, straight grille on the cover
2. - New design, oblique grille on the cover
A. - Outside
B. - Inside

FH (4)	09/2012→
FMX II	09/2013→

MCC Manual controlled climate control air condition.
ECC Electronic controlled climate control air condition.
ECC2 Electronic controlled climate control air condition. (2. generation)

FM (4) → 118910 VoR 21758906 A.outside

118916

Cab air filter
B. Inside
1. Old design (Straight grille on the cover)
2. New design (Oblique grille on the cover)

VoR

23515118
82351184

Material:
Polyester (non-woven fabric)
with **activated carbon** particles

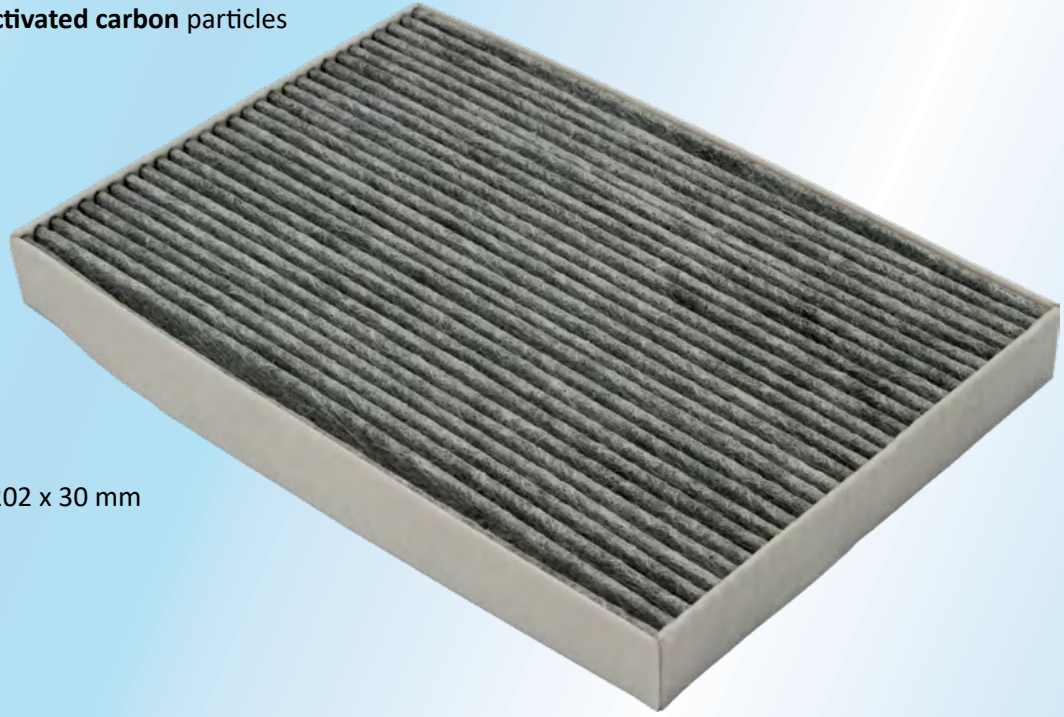

302 x 202 x 30 mm

kg ?

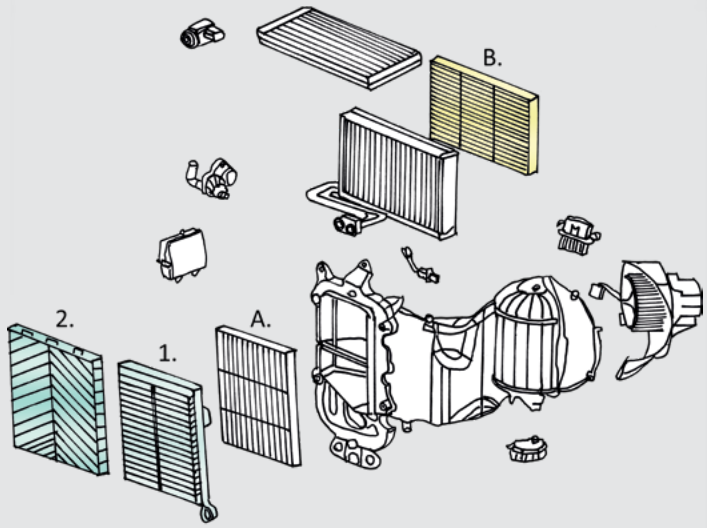

1. - Old design, straight grille on the cover
2. - New design, oblique grille on the cover
A. - Outside
B. - Inside

FH (4) 09/2012→

ECC2 Electronic controlled climate control air condition.
(2. generation)

FM (4) → 118910 VoR 21758906 A.outside

118917

Filter (outside)

VoR

21396525
85134455
20559447

Renault R

50 01 867 491
74 21 396 525
74 85 134 455

205 x 92 x 19 mm



kg 0,06

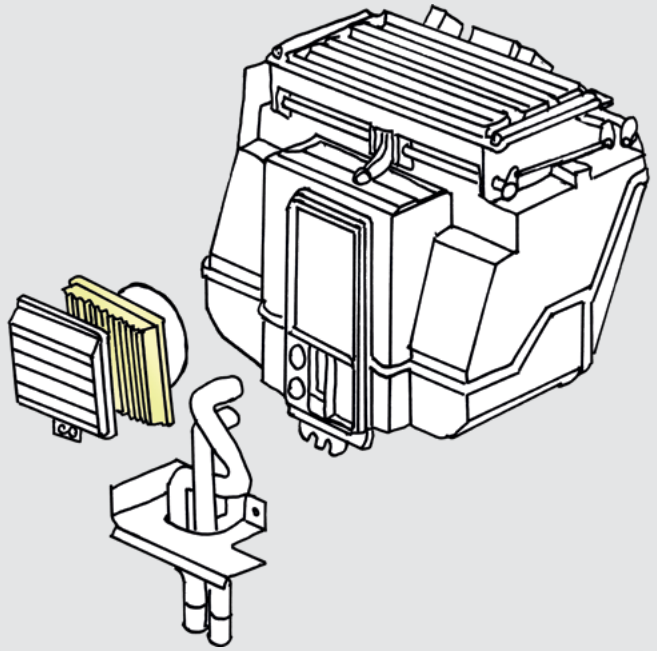

FL (3)	05/2013→
FL	09/2009 - 2013
FE (3)	05/2012→
FE	06/2009 - 2012

Inside filter not available for FE, FL models.

118944

Heat exchanger

VoR

82348993
21062377

Reference numbers:

Nissens **73648**

Material: Aluminium

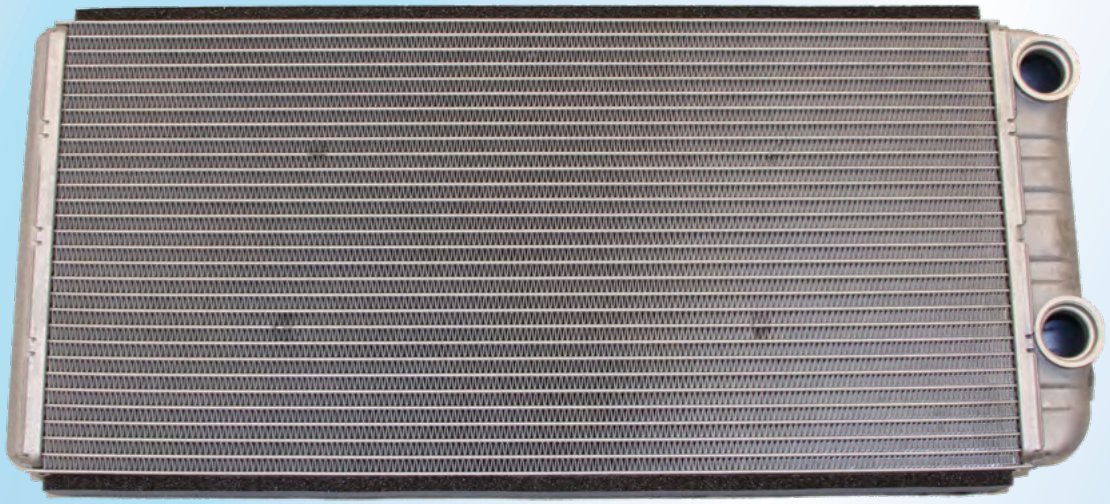

423 x 180 x 32 mm

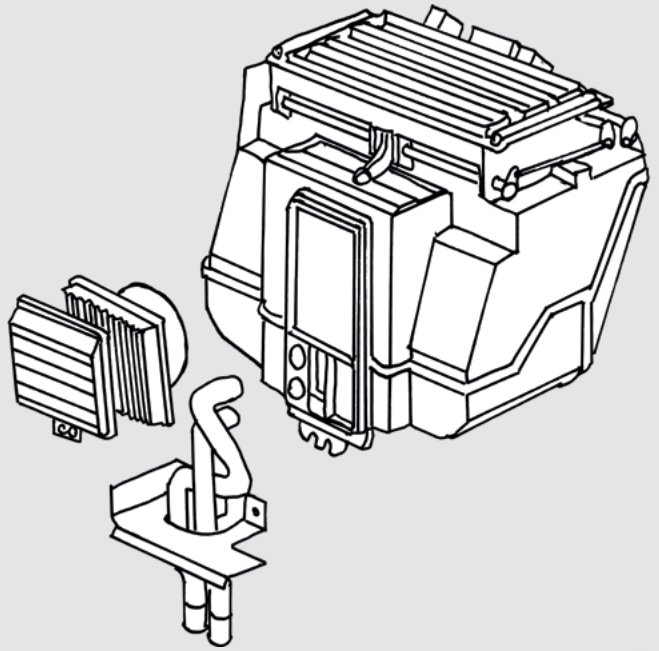

FH (4)	09/2012→
FM (4)	09/2012→
FH	09/2005 - 09/2012
FM	09/2005 - 09/2012

kg 1,28

119290

Rubber strap

Operating temperature range:
-40 → +120 °C

VoR 20498623

Renault R 7420498623

Material: EPDM-rubber



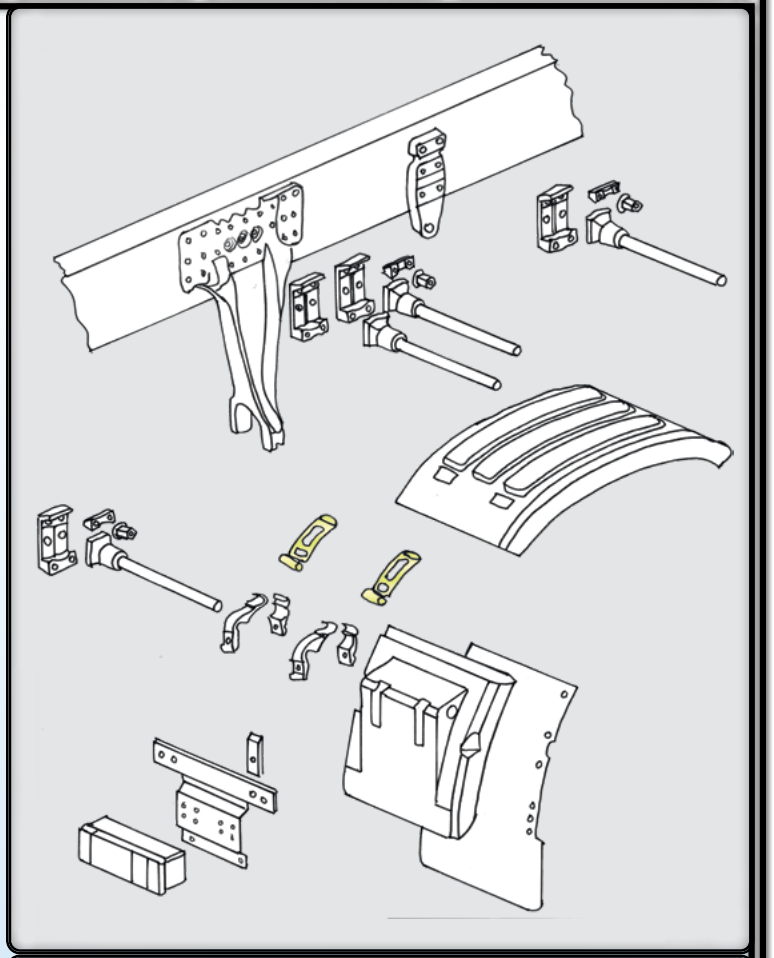

kg 0,12

Suits with clamp assy:

HD 119292



8-16 /		
FH	12, 13, 16	09/2005 - 09/2012
FH 12/16	12, 16	1995 - 09/2005
FM	9, 12	09/2005 - 09/2012
FM 9/12	9, 12	09/2003 - 09/2005
FM 7/10/12	7, 10, 12	1998 - 09/2003
FL 6	6	
FE		

119292

Clamp assy

VoR

20583434 + 20583440
20498620 + 20583440
3987252 + 3987253

+

VoR 965181	Screw	M08 x 70 mm
VoR 994868	Washer	8,4 x 17,0 x 1,6 mm
VoR 990950	Flange lock nut	M08



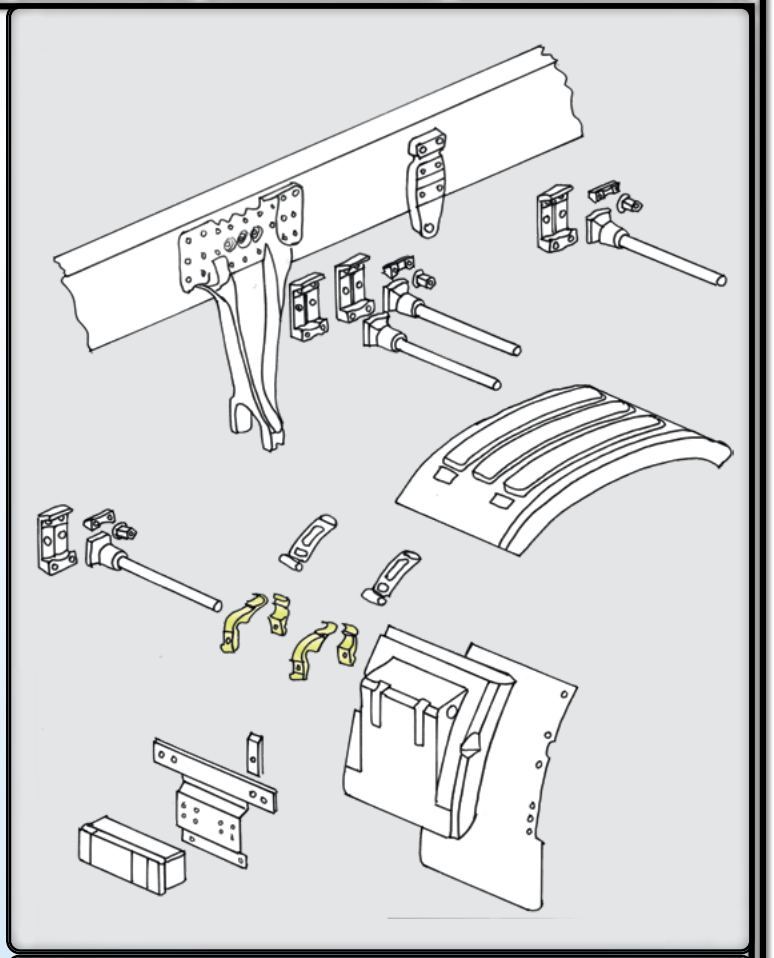

kg 0,59

Length: 250 mm
Width: 40 mm
Material: Aluminium

Suits with rubber strap:

HD 119290

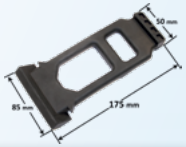

8-16 /		
FH	12, 13, 16	09/2005 - 09/2012
FH 12/16	12, 16	1995 - 09/2005
FM	9, 12	09/2005 - 09/2012
FM 9/12	9, 12	09/2003 - 09/2005
FM 7/10/12	7, 10, 12	1998 - 09/2003
FL 6	6	
FE		

119237

Rubber strap

VoR **21094457**

Material: EPDM rubber

Temperature range:
-40 → +120 °C



Length: 260 mm
Width: 57 mm

kg 0,14

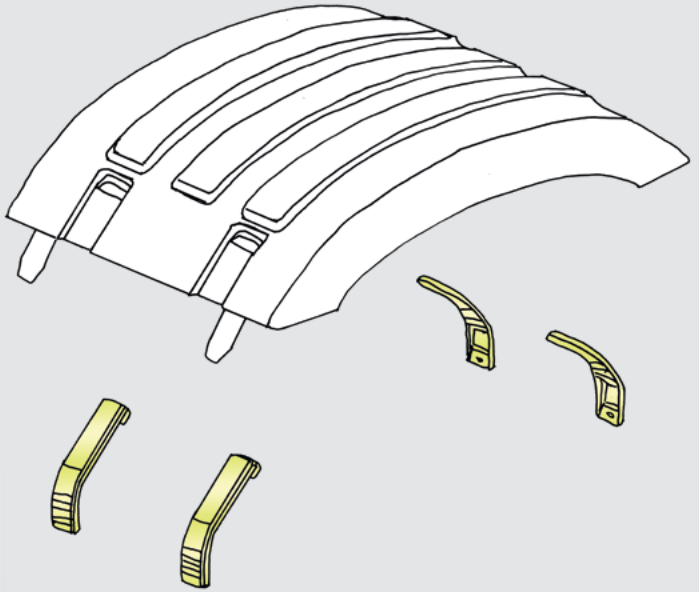

8-24 /		
FH (4)	13, 16	09/2012→
FM (4)	11, 13	09/2012→

119431

Support rod 663 mm

VoR

20466895
3197851

Material:
Aluminium
Rubber

kg 2,57

By cutting the tube on the marked groove, you can get a 615 mm support:

VoR **20466894** **3197850**



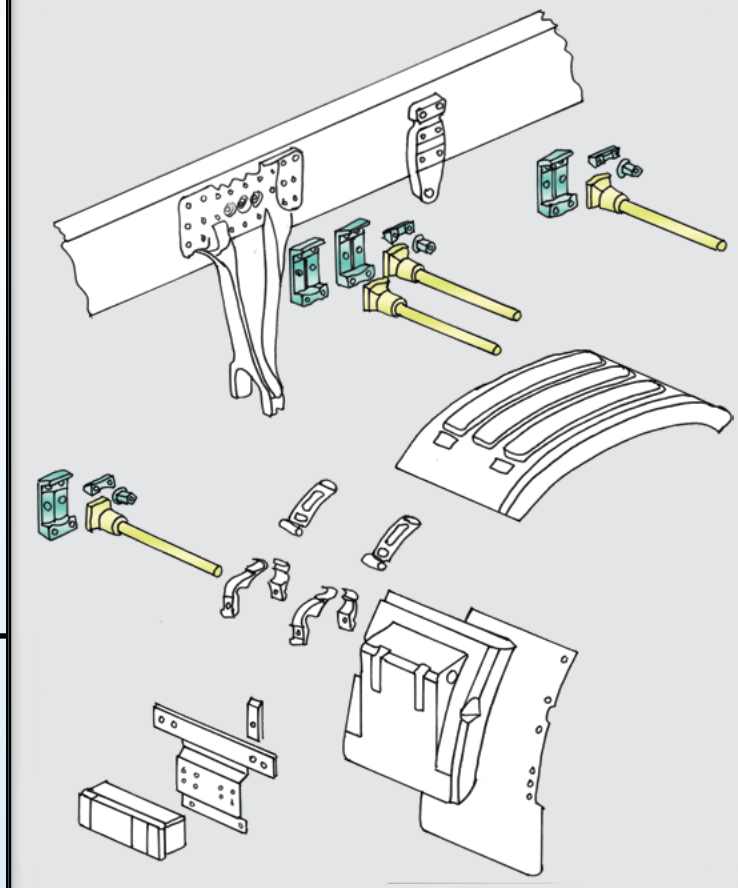

119432

Bracket - wedge kit

VoR

20382890 +
20383038 +
992328 x 4

Material:
Aluminium

kg 0,88

VoR 20382890



VoR 20383038



VoR 992328

M14 / 22,9 mm high



FH, FM	09/2005 - 09/2012
FH 12, FH 16	09/2003 - 09/2005
FM 9, FM 12	09/2003 - 09/2005
+ All old models	→ 09/2003

Max. 8 pcs /

119400

Tube + rubber

VoR 21094410

Max length: 560 mm

kg 2,1

119401

Tube + rubber

VoR 21094411

Max length: 595 mm

kg 2,2

119403

Tube + rubber

VoR 21094413

Max length: 630 mm

kg 2,4

119405

Tube + rubber

VoR 21094415

Max length: 655 mm

kg 2,4

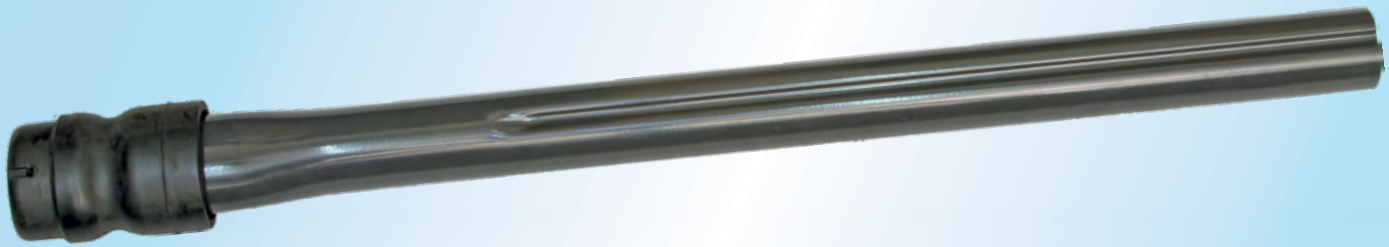

Material: Steel and rubber

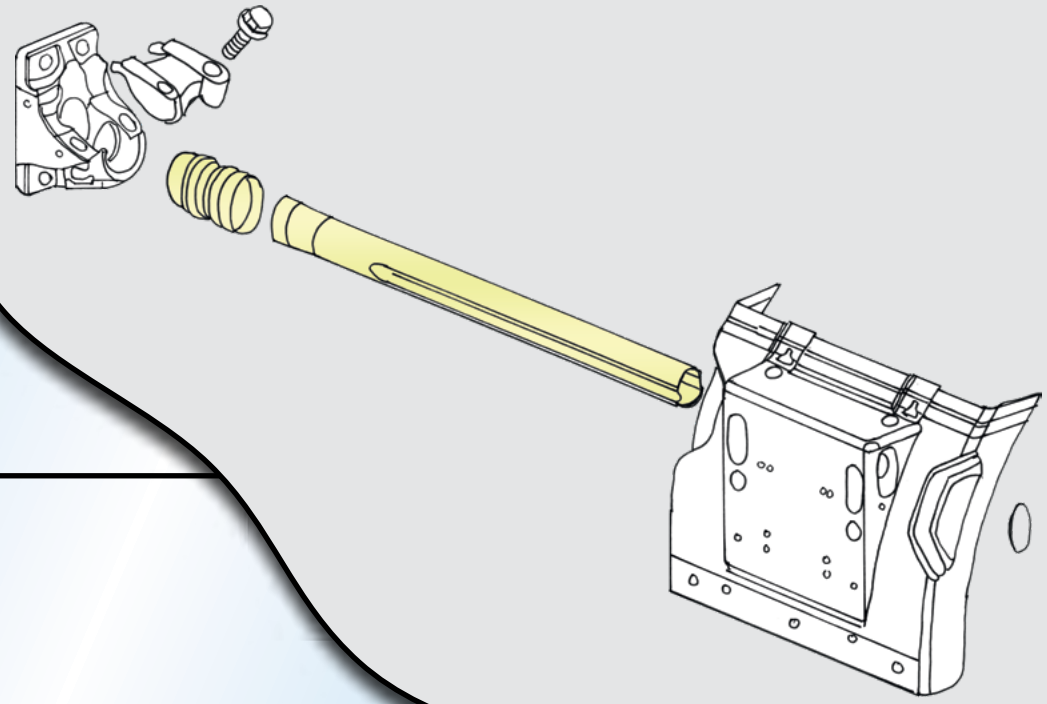

FH (4), FM (4)	09/2012→
FH, FM	09/2005 - 09/2012

Max. 10 pcs /

119410

Bracket assy

VoR

21213202 +
21090272 +
984818 x 2

Material:
HD = Steel
OE = Aluminium

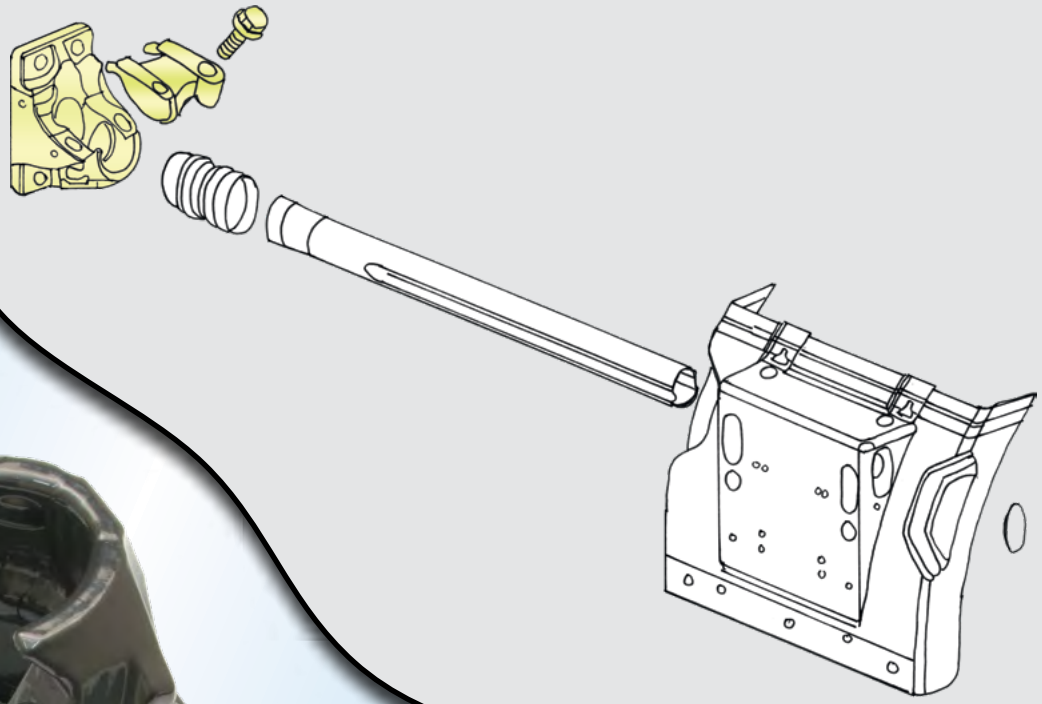



kg 3,6

Max. 10 kit /

FH (4), FM (4)	09/2012→
FH, FM	09/2005 - 09/2012

119326

Bracket → Mudguards, Left & Right

VoR **8154849**

Material: Steel



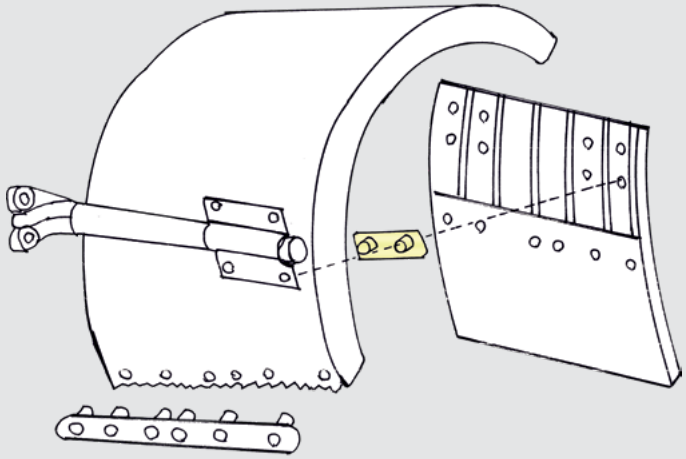

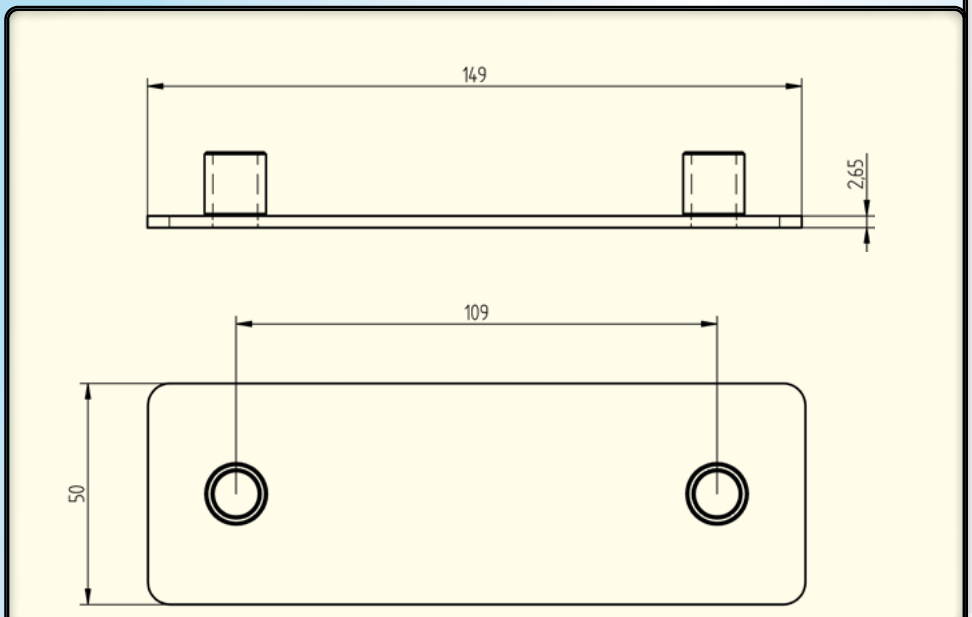

kg 0,18

FH (4)	09/2012 →
FH	09/2005 → 09/2012
FH 12/16	→ 09/2005
FM (4)	09/2012 →
FM	09/2005 → 09/2012
FM 9/12	→ 09/2005

→ 16 pcs /

119233

Wedge

VoR

20721840
20566233
1079992

Material:
Plastic

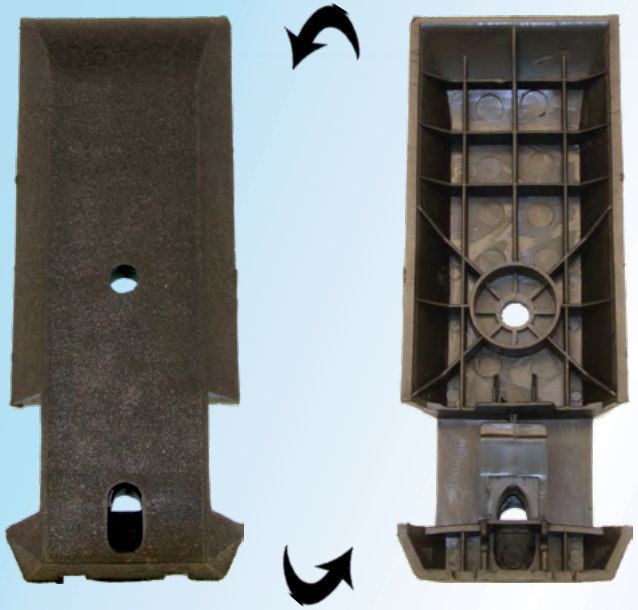

kg 0,06 Max. 16 pcs /

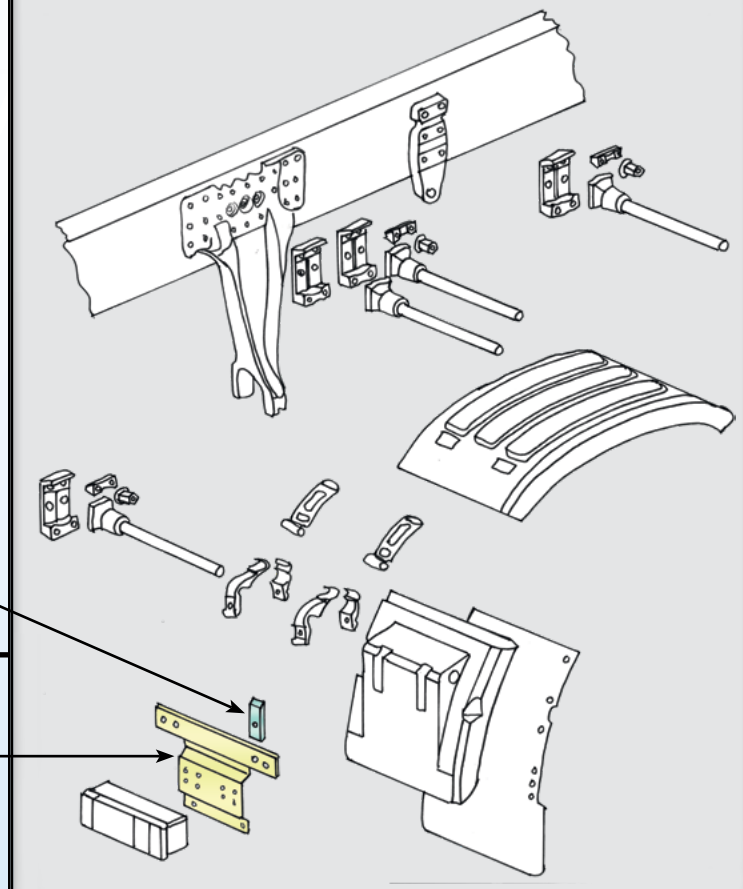

119230

Bracket → rear lamp

VoR **20392000**

Renault R **7420392000**

Material:
2,8 mm painted steel

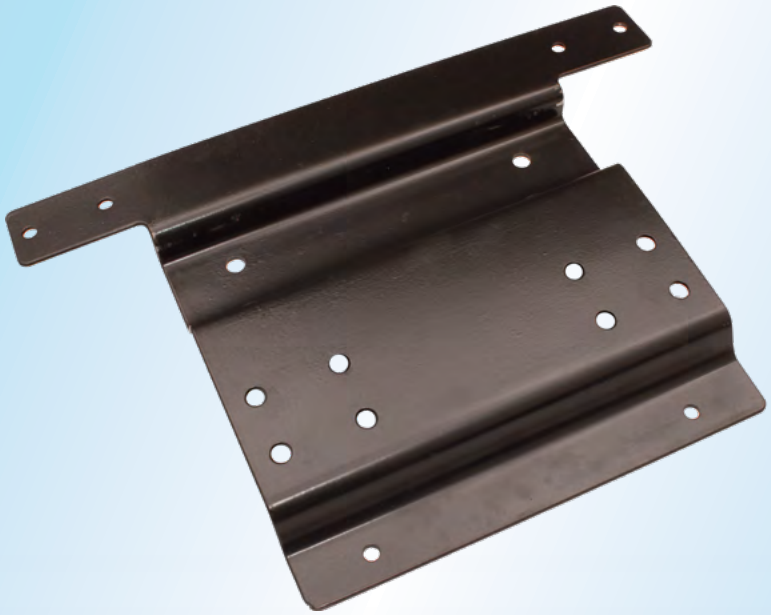

kg 1,41

FH	09/2005 - 09/2012
FH 12/16	1995 - 09/2005
FM	09/2005 - 09/2012
FM 9/12	09/2003 - 09/2005
FM 7/10/12	1998 - 09/2003
FE	

HD - PARTS

FINLAND



World wide wholesaler of spare parts for trucks and buses

Est. 1976

PARTS FOR:

MERCEDES

HD - PARTS

HEAVY DUTY®

Varustamme raskasta kalustoa

Spare parts for heavy duty vehicles

Запасные части для тяжёлой грузовой техники

609220

MBR 000 401 37 71
346 401 00 71
381 401 07 71

ManR 81.45501-0067
81.45501-0082
81.45501-0141





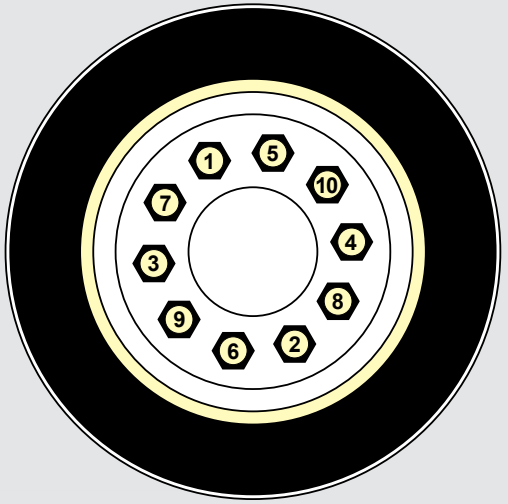

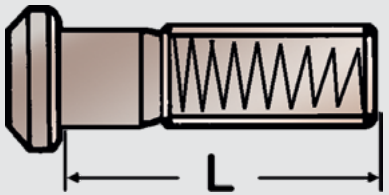

UNF
M22 x 1,5 / 10.9

609232

MBR

000 401 23 71
942 401 02 71





617370

Multi switch (driver side)

Clearance product !

MBR **943 820 0097**

Material: Plastic

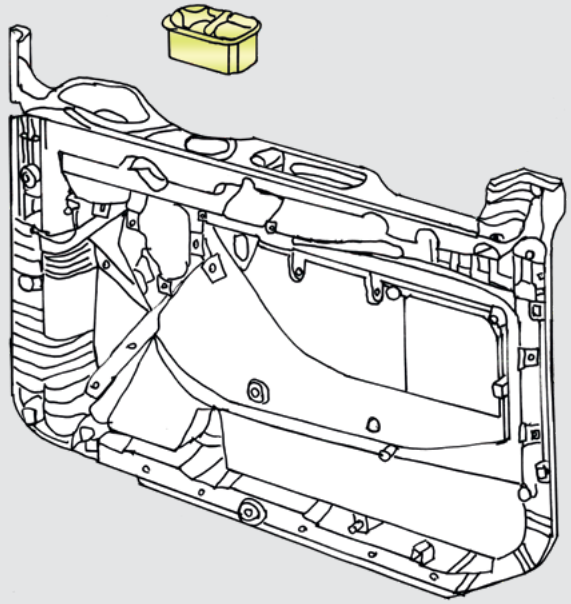





kg 0,14

618220

Motor → window lifter, left

MBR

000 820 4908
000 820 2808

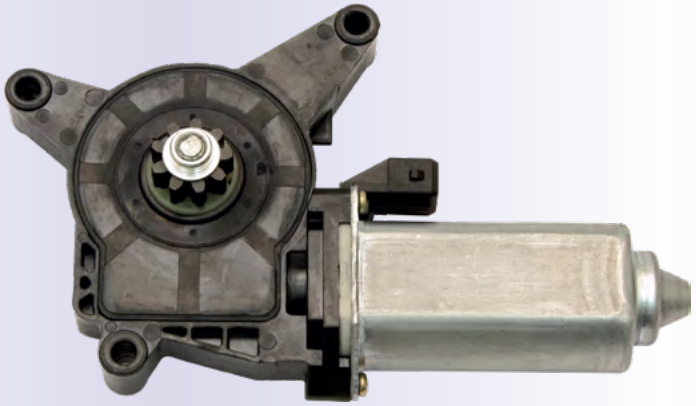

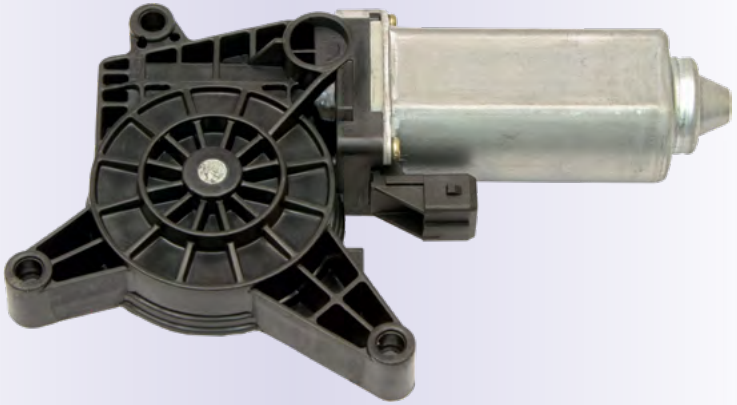

kg 0,75

618221

Motor → window lifter, right

MBR

000 820 5008
000 820 2908

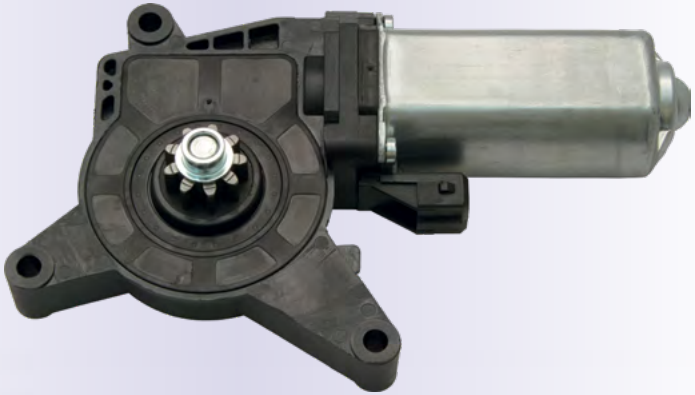



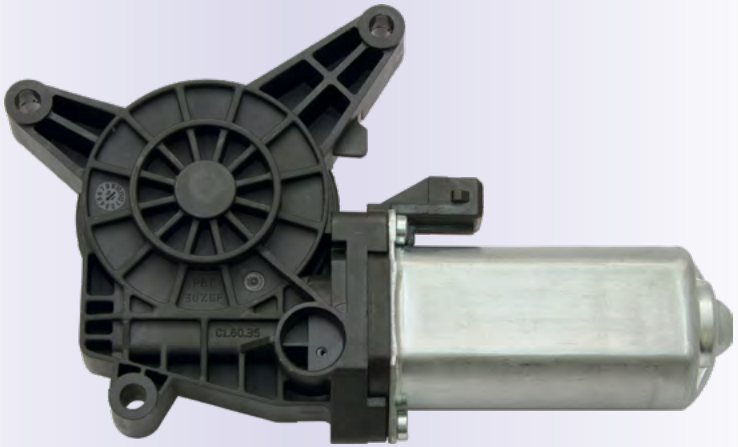

kg 0,75

618911

Cab air filter

MBR

000 830 11 18
000 830 92 18

Renault R **50 21 107 644**

Material:

Polyester
(Non-woven fabric)

Dimensions:

Length: 380 mm
Width: 134 mm
Height: 37 mm

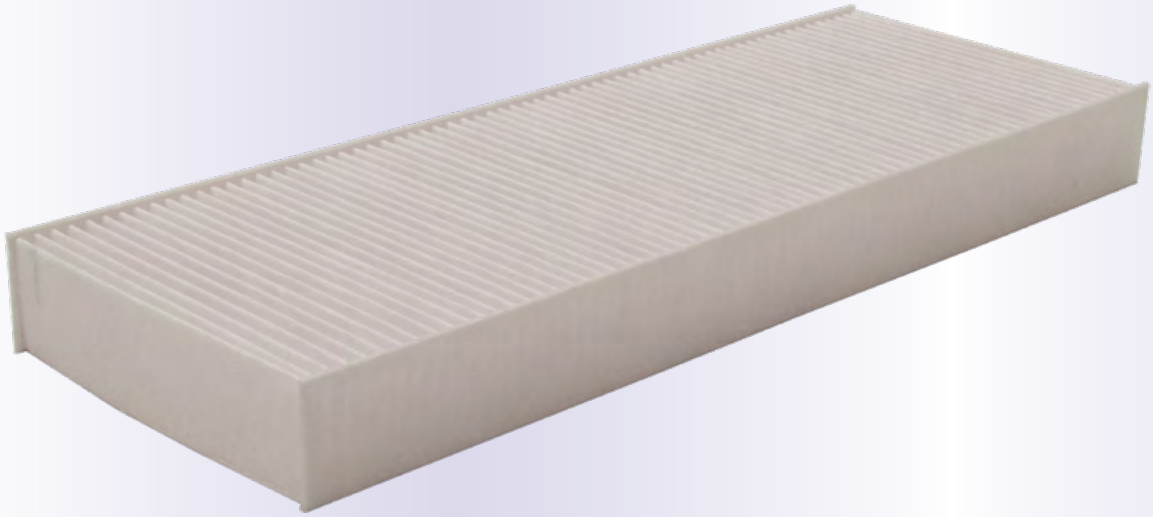



Actros 1/2/3	04/1996 →
Atego	04/1998 - 10/2004
Axor 2	10/2004 →
Econic	03/1998 →
Econic 2	04/2013 →

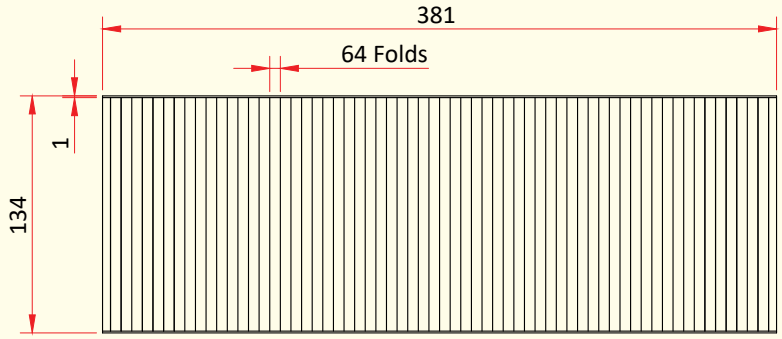

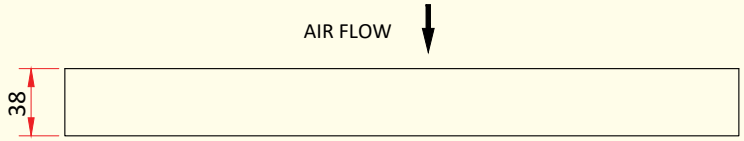

618912

Cab air filter

MBR **973 835 01 47**

Renault R **50 21 188 018**

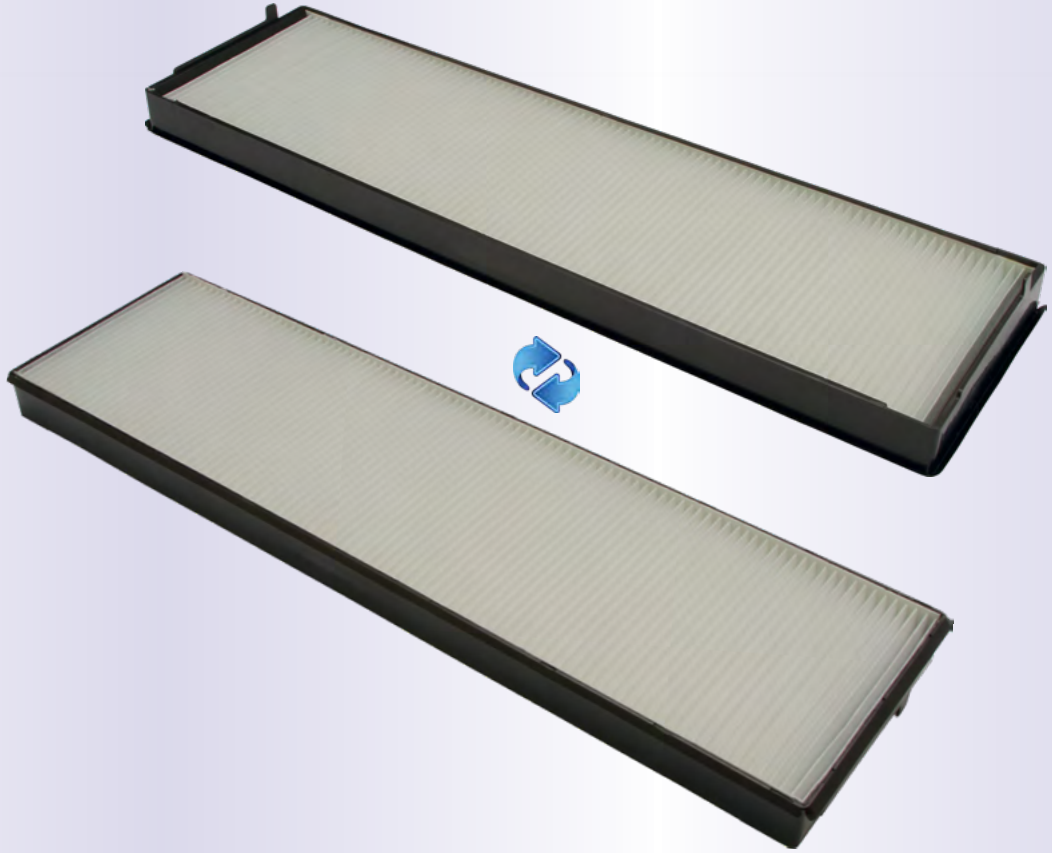

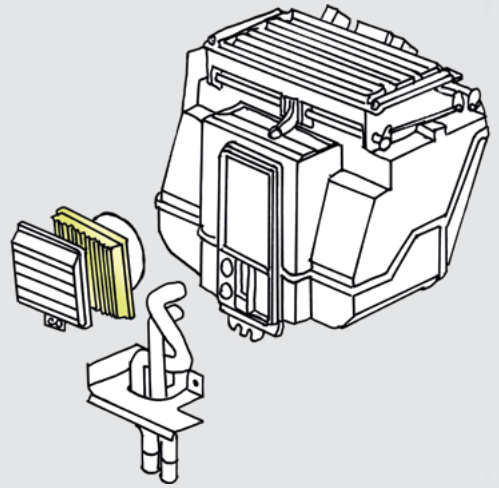

Dimensions:

Length: 571 mm
Width: 158 mm
Height: 37 mm

Material:

Polyester
(Non-woven fabric)

kg 0,38

Atego III	04/2013 →
Atego II	10/2004 →
Atego I	01/1998 → 10/2004

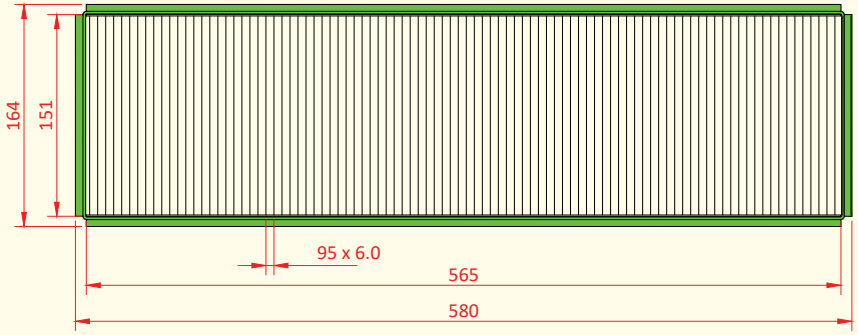

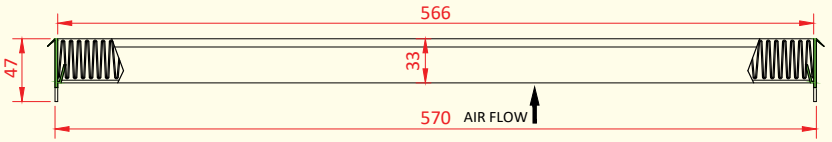

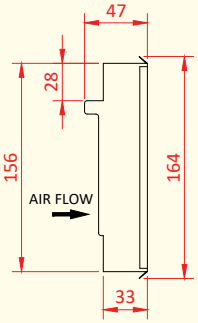

618913

Cab air filter

MBR **940 835 00 47**

Renault R **74 24 993 604**

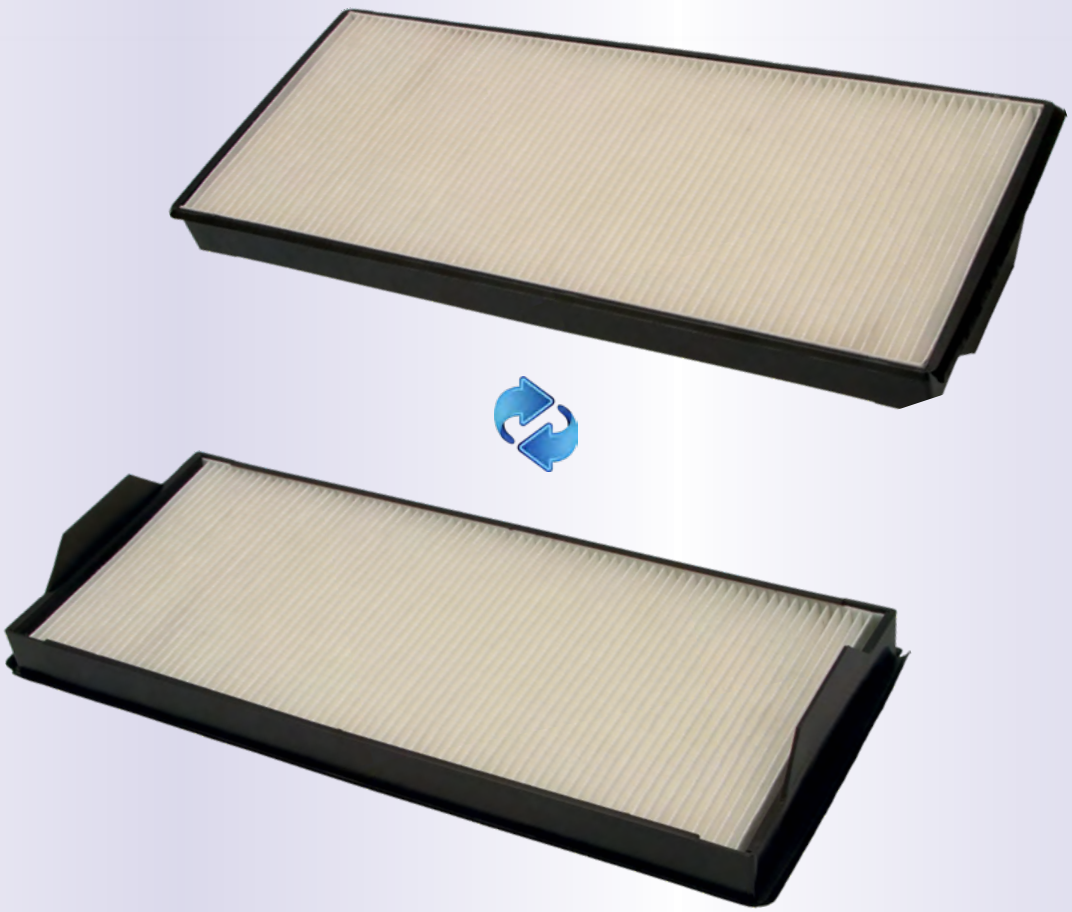

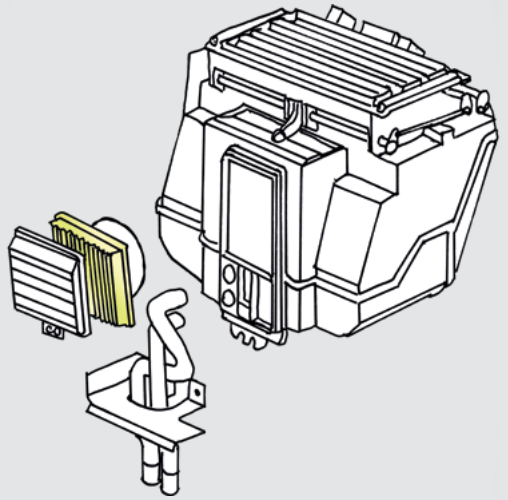

Material:

Polyester
(Non-woven fabric)

Dimensions:

Length: 460 mm
Width: 190 mm
Height: 56 mm

kg 0,4

Atego I	01/1998 - 10/2004
Atego II	10/2004 →
Axor I	01/2002 - 10/2004
Axor II	10/2004 - 2014
Econic	03/1998 - 2014
Actros	04/1996 - 10/2002 ?
Kamaz 5000	1990 →
Kamaz 6000	1990 →

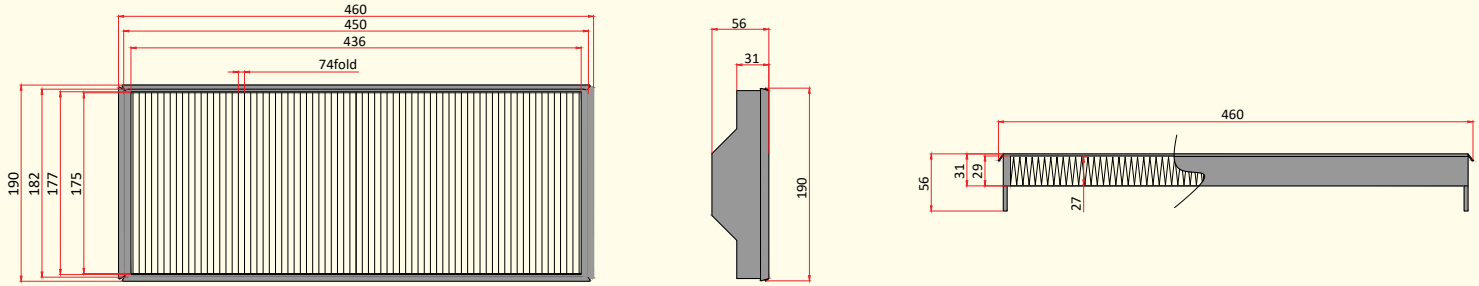

618918

Cab air filter

MBR

000 830 96 18
960 830 02 18

Material:

Polyester
(Non-woven fabric)

Dimensions:

Length: 316 mm
Width: 230 mm
Height: 37 mm



kg 0,35

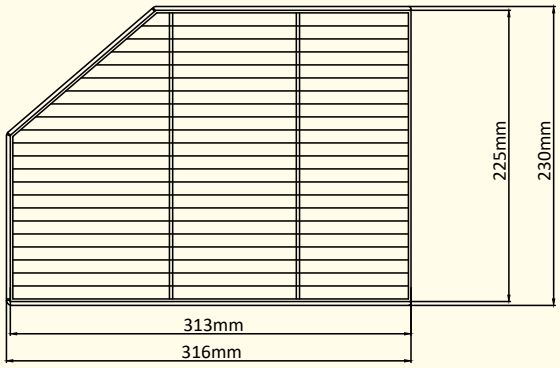

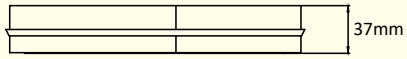



MERCEDES

Actros MP2 / MP3	10/2002 →
Actros MP4 / MP5	07/2011 →
Antos	07/2012 →
Arocs	01/2013 →
Atego 3	04/2013 →
Axor	01/2002 - 10/2004
Axor 2	10/2004 →

SISU

01/2011 - 08/2015

8x2 8x4 10x4/6 10x4/4

Polar 625 Carrier, Roll, Works
Polar 625 Rock, Works
Polar 625 Roll, Timber

618920

Cab air filter

MBR 639 835 02 47
Renault R 50 21 185 766

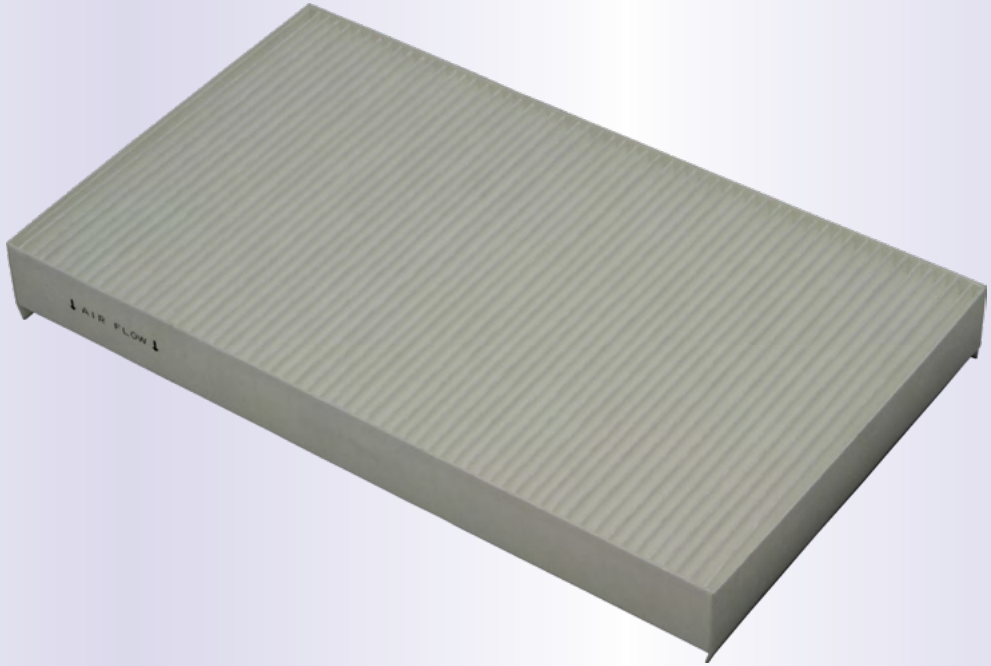

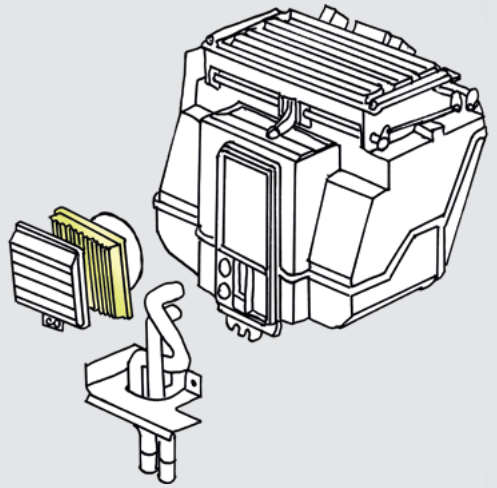

Dimensions:

Length: 348 mm
Width: 205 mm
Height: 33/42 mm

Material:

Polyester
(Non-woven fabric)

kg 0,25

Viano	09/2003 - 12/2014
Vito	09/2003 - 12/2014
Vito / Mixto	09/2003 - 12/2014

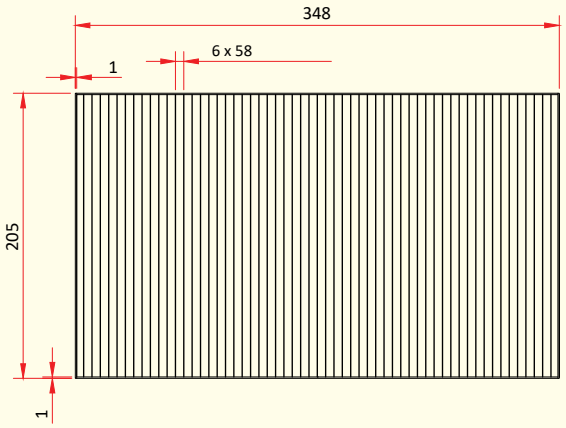

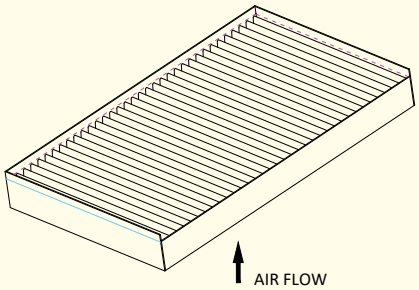

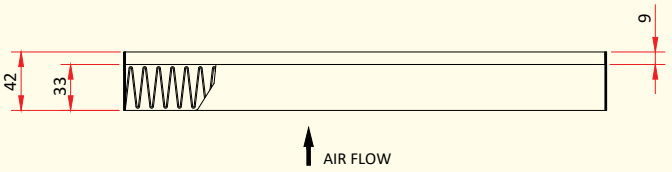

HD - PARTS

FINLAND



World wide wholesaler of spare parts for trucks and buses

Est. 1976

HEAVY DUTY®

PARTS FOR:

MAN →

702410

Roller

ManR

51.95800-6099
51.95800-6092
51.95800-6076
51.95800-6079

Reference numbers:

Dayco **APV2741**
Dayco old **APV2403**
SKF **VKMCV 55007**



Ø 74 x 34 mm



Koyo

TGA	05/2004 - 03/2015
TGM	10/2005 - 03/2015
TGS	10/2007 - 03/2015
TGX	10/2007 - 03/2015
Lion	09/1995 →
NG/NL	07/1998 →

kg 0,59

702412

Roller

ManR

51.95800-7485
51.95800-7431

Reference numbers:

Dayco **APV2971**



Ø 65 x 36 mm



TGS	10/2007→
TGX	10/2007→
TGA	04/2000→
E 2000	05/2000→
F 2000	01/1994→
F 90	02/1998 - 12/1995
Lion star	

kg 0,51

703100

Seal kit → fuel filter

ManR

81.12902-6000
81.12902-0076

Clearance product !

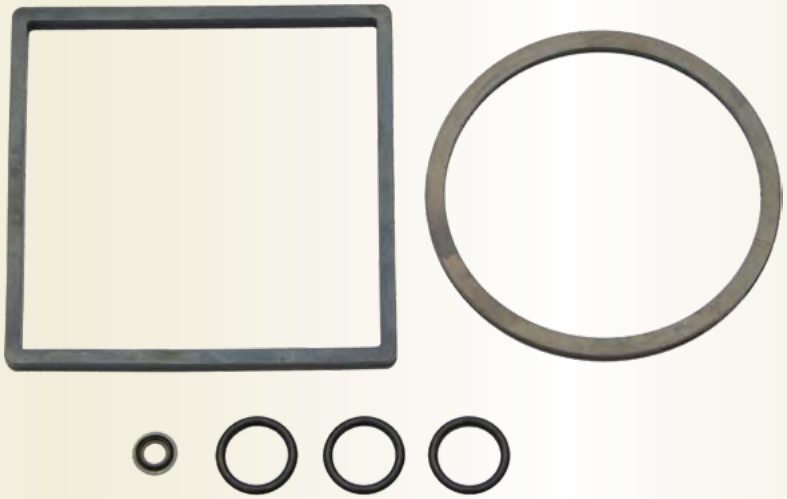

kg 0,02

TGL
TGM
M 2000
L 2000

More specific suitability info for bus coming later.

703101

Seal kit → fuel filter

ManR

81.12902-6001
81.12902-0066
81.96601-0754

Renault R **5001 875 253**

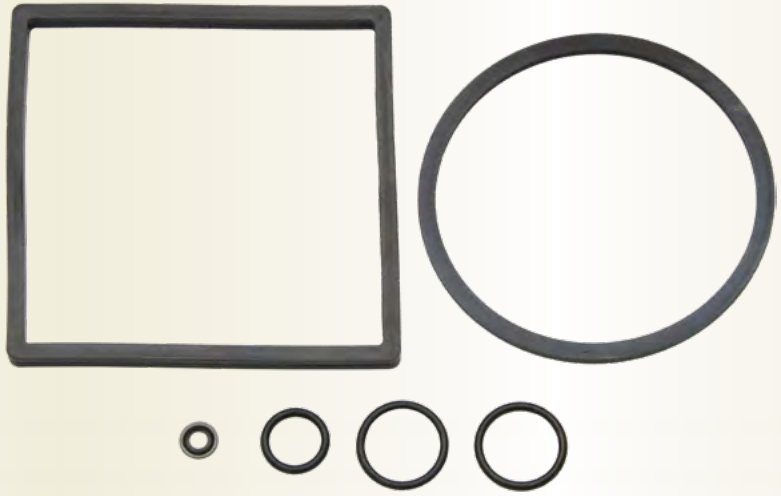

kg 0,03

TGA
TGX
E 2000
F 2000

More specific suitability info for bus coming later.

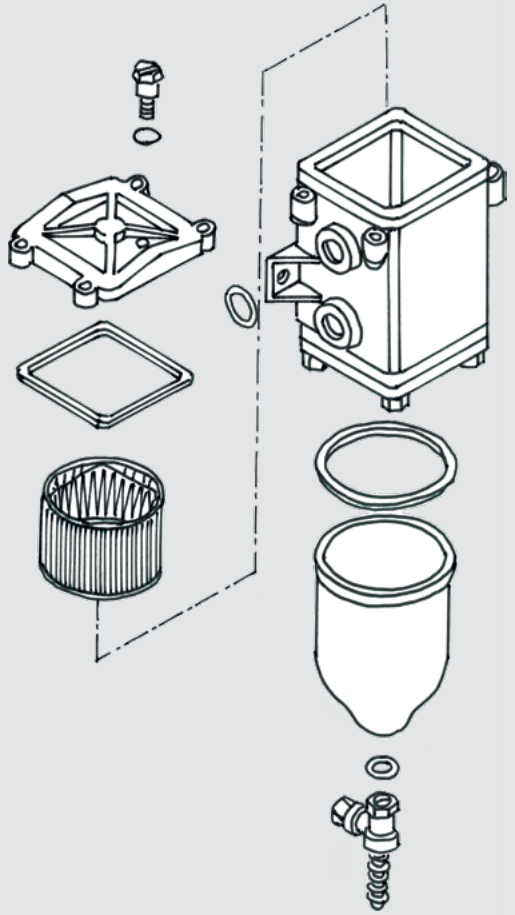

716440

Lever switch

ManR

81.25509.0139
81.25509.0172
81.25509.0173
81.25509.0188
36.25509.0004

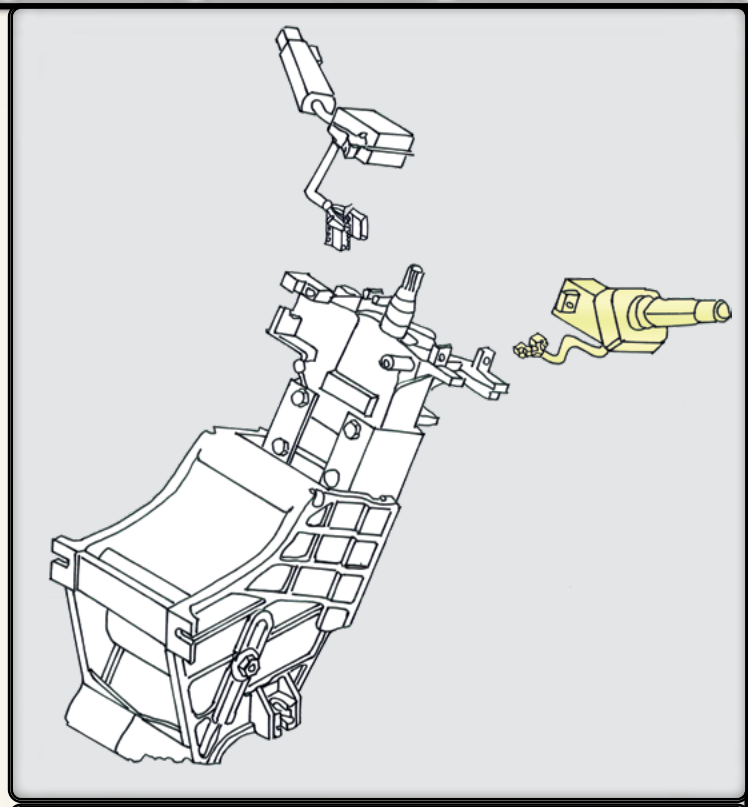



Functions:

- Wipe-wash
- Indicator
- High beam
- Horn
- Light dimmer

TGA, TGL, TGM, TGS, TGX



kg 0,6

716380

Pneumatic solenoid valve

ManR

81.52160-6115
81.52160-6116
81.52160-6117
81.52160-6118
81.52160-6120
81.52160-6122
81.52160-6124
81.52160-6142
81.52160-6143
81.52160-9115
81.52160-9116
81.52160-9118



M12 x 1,5 mm →



TGS TGX TGM TGL TGA
L2000 M2000 F2000 F90 M90
Centroliner Jetliner Starliner Cityliner
Lion's City Lion's Classic Lion's Star

Operating pressure → 11 bar
Voltage 24 v DC
0,41A



kg 0,53

Suitable bayonet connector:
HD 317032
16



DIN 72585-A1

718448

DC Motor → Wipers

ManR

81.26401.6132
81.26401.6133
81.26401.6135
81.26401.6138
81.26401.6139
81.26401.6140
81.26401.6141
81.26401.6142
81.26401.6143

→405001 Valeo



New HD-structure:

HD-wiper motor has a new improved structure, which is developed after hours of testing in most extreme conditions.

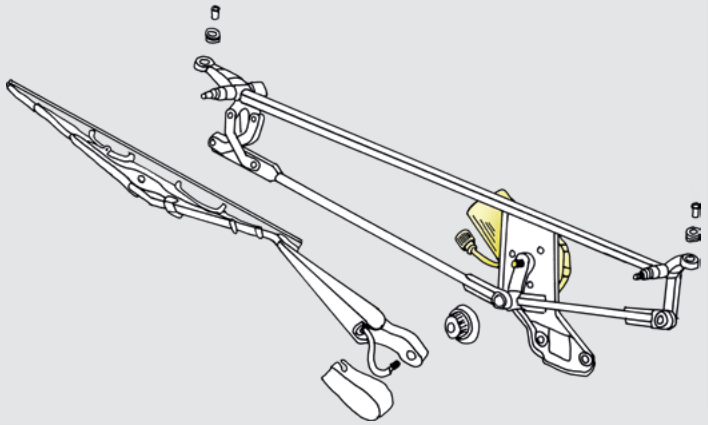

TGA	04/2000→
TGL	04/2005→
TGM	10/2005→
TGS	10/2007→
TGX	10/2007→

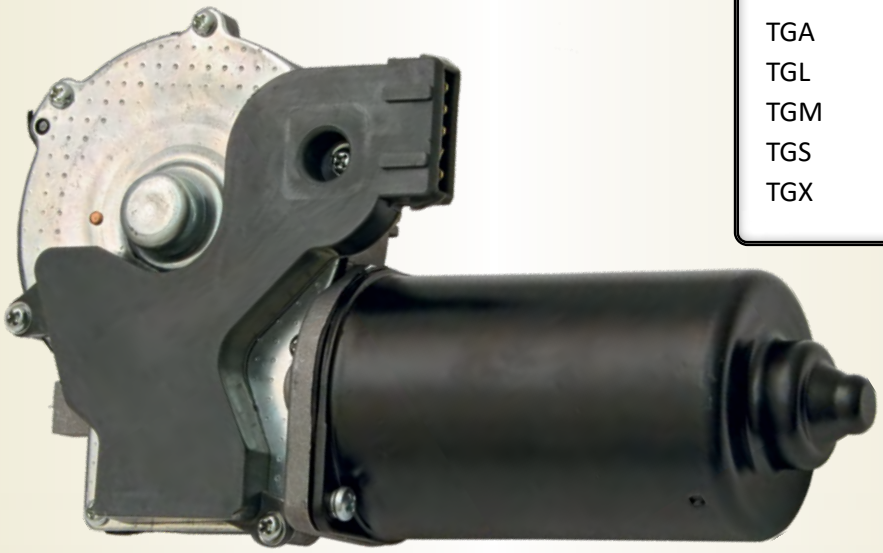



kg 1,8

718912

Cab air filter

ManR **81.61910.0018**
81.61910.0029
81.61910.0032
81.61910.0042

Renault R **50 21 188 021**

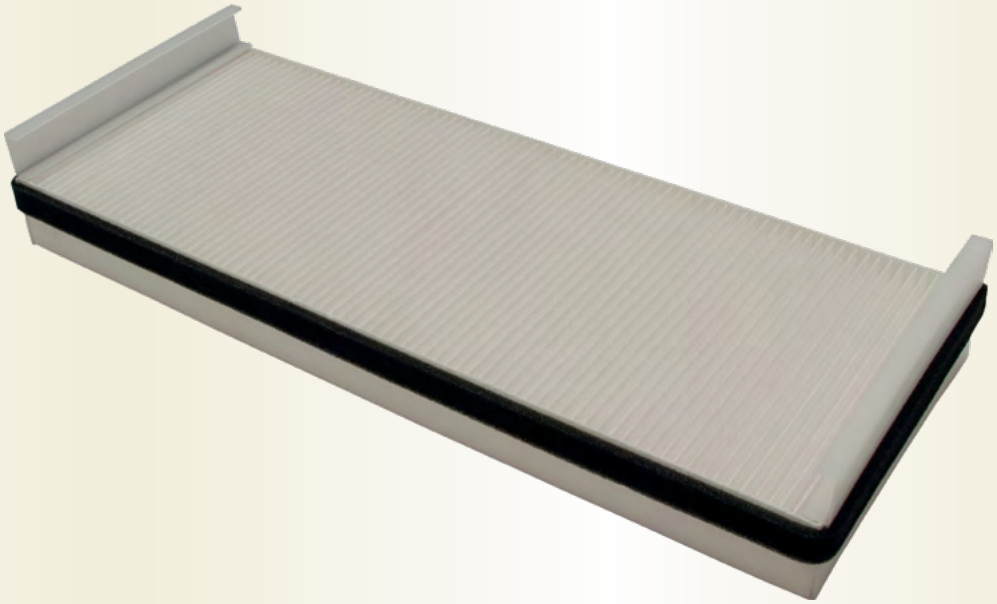

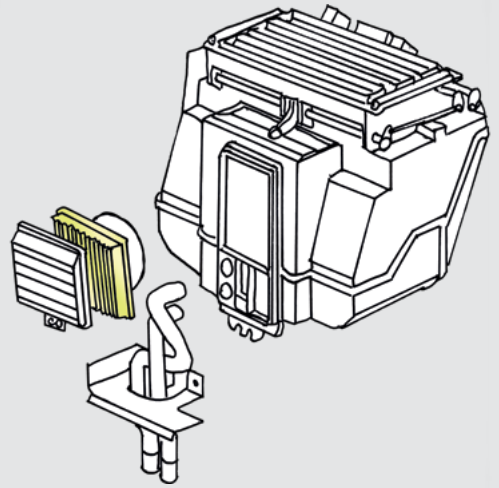

Dimensions:

Length: 470 mm
Width: 189 mm
Height: 44/69 mm

Material:

Polyester
(Non-woven fabric)

kg 0,36

MAN TGA	04/2000 →
MAN TGM	10/2005 →
MAN TGS	10/2007 →
MAN TGX	10/2007 →
Neoplan	
Renault	

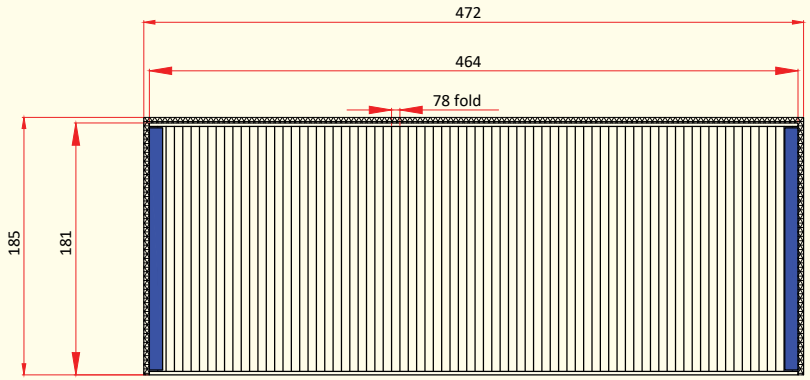

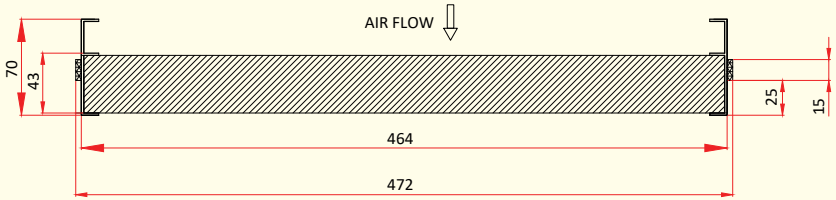

HD - PARTS

FINLAND

World wide wholesaler of spare parts for trucks and buses

Est. 1976

PARTS FOR:

DAF

HD - PARTS

HEAVY DUTY®

Varustamme raskasta kalustoa

Spare parts for heavy duty vehicles

Запасные части для тяжёлой грузовой техники

418911

Cabin air filter

Material: Polyester (non woven fabric)

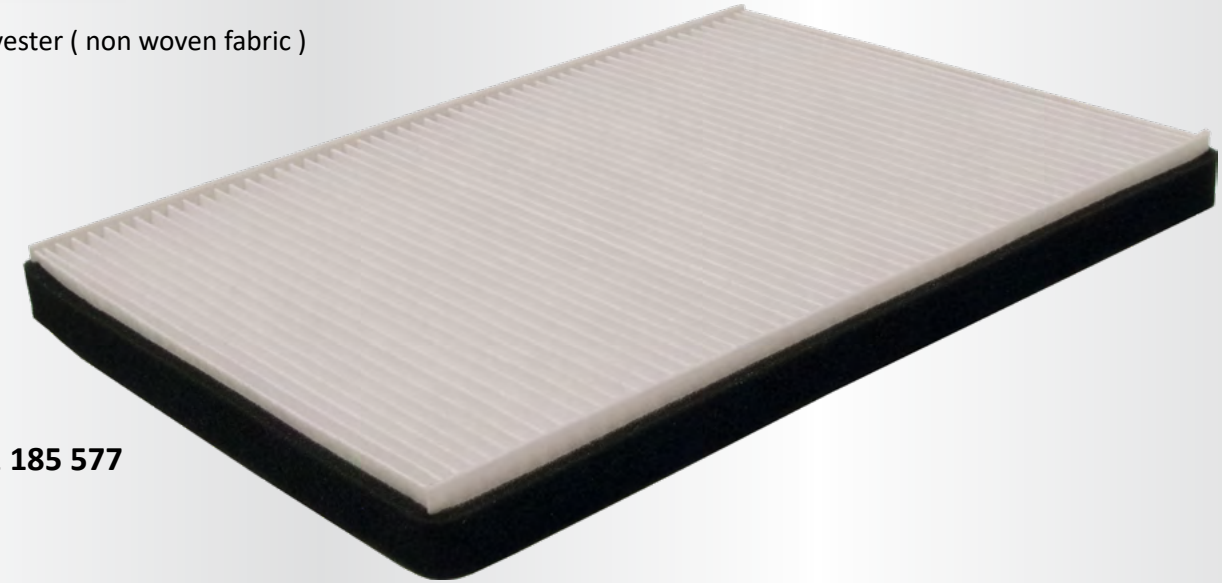



DAF R

1825427
1658991
1529650
1322255

Renault R **50 21 185 577**

Dimensions:

Length: 320 mm
Width: 235 mm
Height: 25 mm

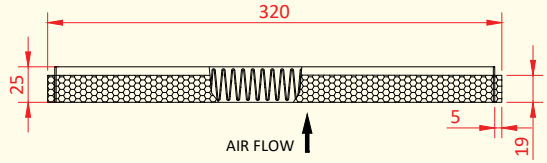

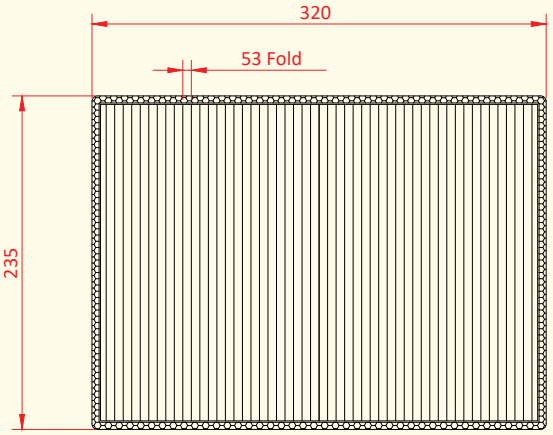

DAF

XF	10/2012 →
FA FAD FAN FAR FT FTG FTM FTP FTT	
XF 105	10/2005 →
XF 95	09/2002 - 12/2006
FA FAD FAK FAN FAR FAS FAT FT FTG FTM FTP FTR FTS FTT	
95 XF	09/1997 - 09/2002
LF 45	01/2001 →
CF 85	01/2001 - 05/2013
75/85 CF	02/1998 - 12/2000

RENAULT

Clearance product !

Updated
20.11.2020

112500

Stay



kg 2,24

Clearance product !

VoR
20477805
1629668
(3986433)

LMI Reference:
22315 01

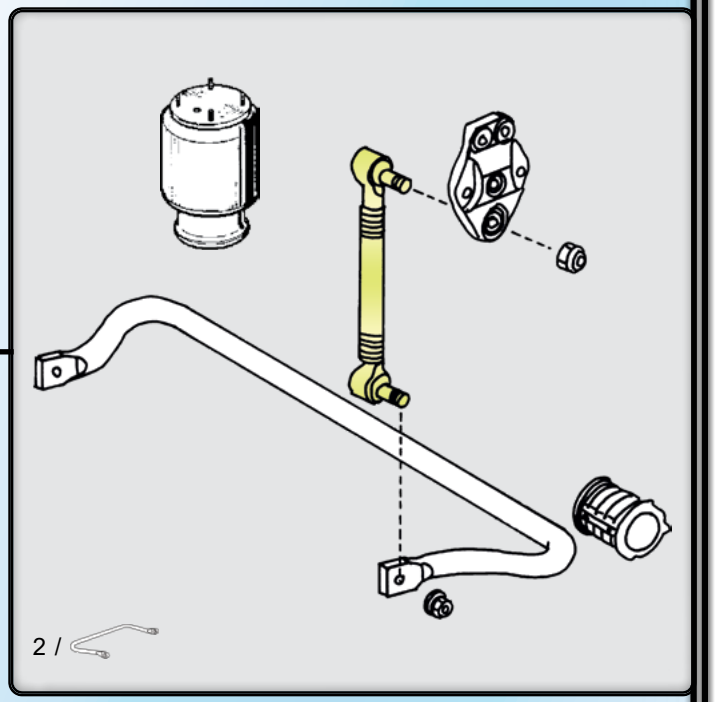

112503

Stay



kg 2,29

Clearance product !

VoR
22365883
20477807
3944046

LMI Reference:
27717 01

All reference numbers are for referencing purposes only and must not be mentioned in invoices to the vehicle owners.

112520

M22 x 1,5

Link rod

VoR 20443061

With bracket / С опорой:
20994418
20443065

→ 112519
(30 mm M22x1,5)

kg 4,05

Ride height
Просвет
240 Standard

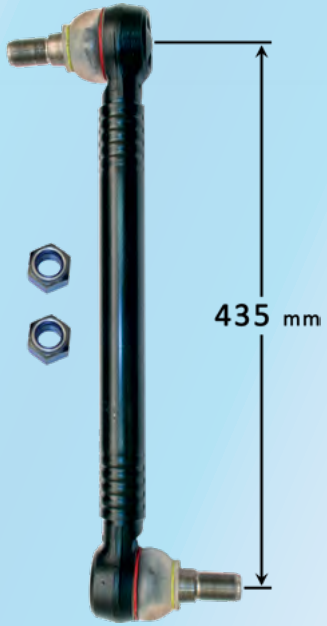

112523

M22 x 1,5

Link rod

VoR 20443063

With bracket / С опорой:
20994420
20443067

→ 112519
(30 mm M22x1,5)

kg 0,00

Not available

Ride height
Просвет
160/140 Low / Extra low



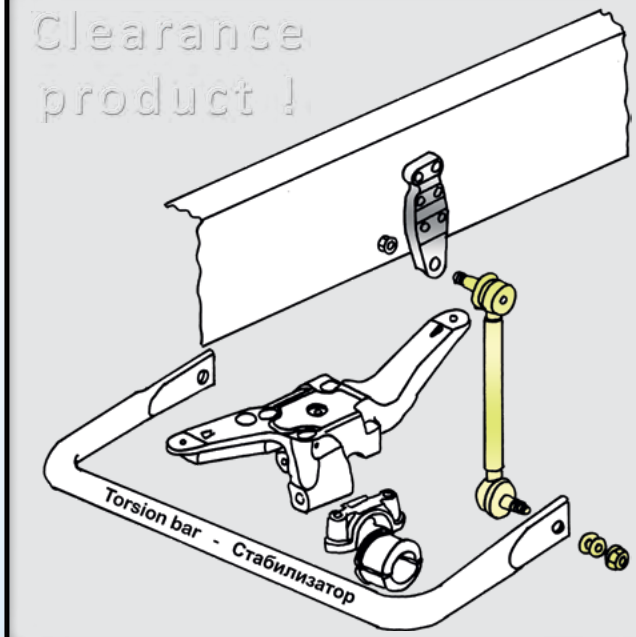

112522

M22 x 1,5

Link rod

VoR 20443062

With bracket / С опорой:
20994419
20443066

→ 112519
(30 mm M22x1,5)

kg 3,91

Ride height
Просвет
180 Medium



112519

Bracket

VoR 20443059

2 /



kg 3,48

HD	HD	VoR
112519	+ 112520	= 20994418
112519	+ 112522	= 20994419
112519	+ 112523	= 20994420

M22 x 1,5 mm threaded link rods are replaced by M24 x 1,5 mm threaded link rods.
Torsion bar must be replaced too.

Тяги с наконечниками M22x1,5мм были заменены на тяги с наконечниками M24x1,5мм.
Стабилизатор так же должен быть заменен на новый.

FH, FH 12, FH 16
FM, FM 7, FM 9, FM 12

B6R, B7R, B9R →112523

All reference numbers are for referencing purposes only and must not be mentioned in invoices to the vehicle owners.

112530

Link rod

M24 x 1,5

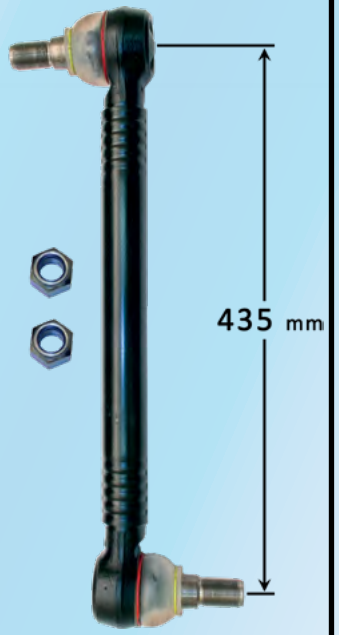

VoR

With bracket

21287061

→ 112535
(35 mm M24x1,5)

kg 4,48

Ride height
Просвет

240 Standard

112533

Link rod

M24 x 1,5



VoR

With bracket

21287063

→ 112535
(35 mm M24x1,5)

kg 0,00

Not available

Ride height
Просвет

160/140 Low / Extra low

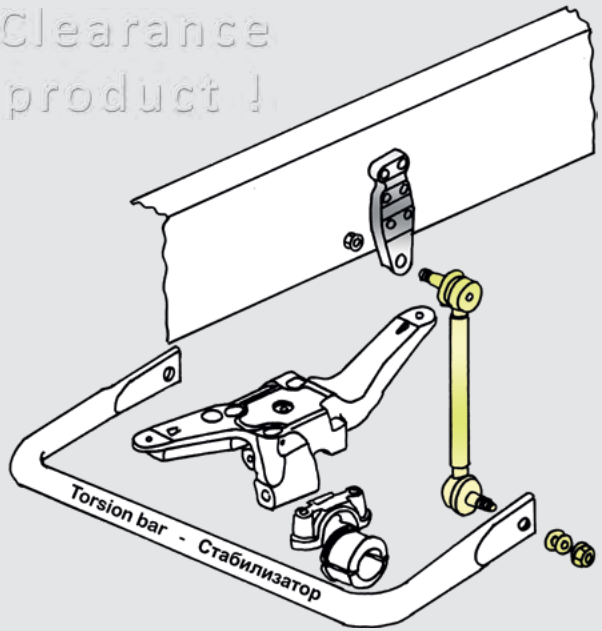

112532

Link rod

M24 x 1,5

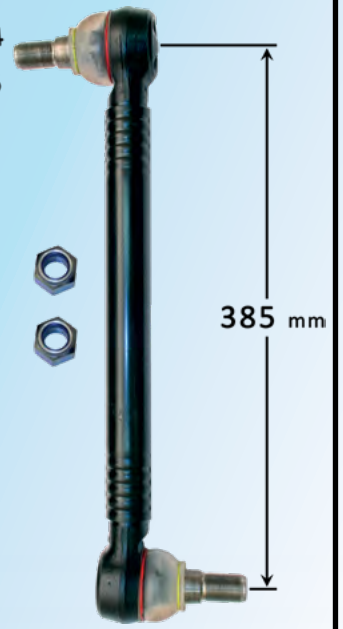

VoR

With bracket

21287062

→ 112535
(35 mm M24x1,5)

kg 4,37

Ride height
Просвет

180 Medium

112535

Bracket

VoR **21412042**

kg 3,54



2 /

M22 x 1,5 mm threaded link rods are replaced by M24 x 1,5 mm threaded link rods.
Torsion bar must be replaced too.

Тяги с наконечниками M22x1,5мм были заменены на тяги с наконечниками M24x1,5мм.
Стабилизатор так же должен быть заменен на новый.



FH, FH 12, FH 16
FM, FM 7, FM 9, FM 12



B6R, B7R, B9R

All reference numbers are for referencing purposes only and must not be mentioned in invoices to the vehicle owners.

112726

Shaft kit

VoR 994886
990068



VoR 984405
963096

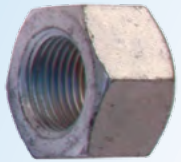

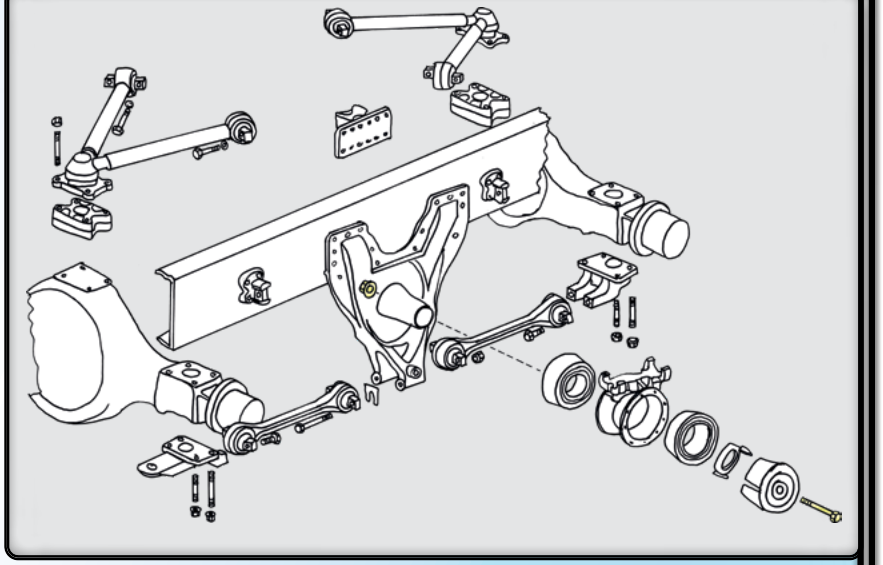

Material:
Hard 10 class steel

VoR 993079

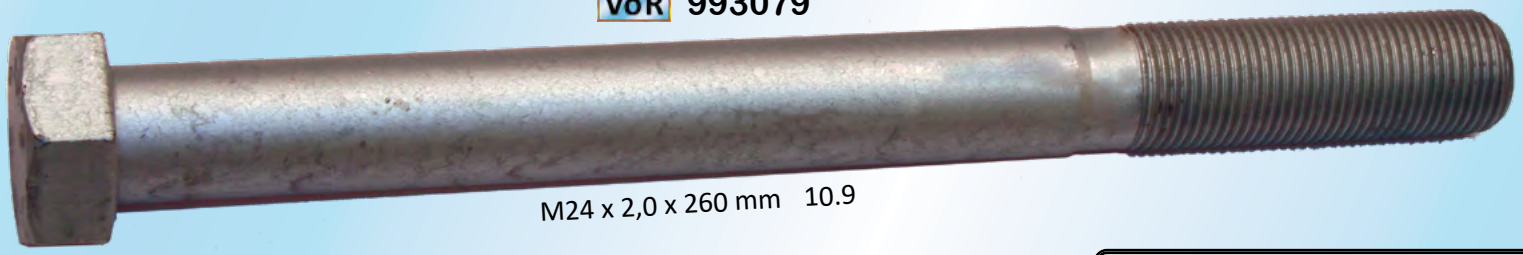

M24 x 2,0 x 260 mm 10.9

Clearance product !

kg 1,15

FH (4)	09/2012→
FH	09/2005 - 09/2012
FH 12/16	01/2002 - 09/2005
FM (4)	09/2012→
FM	09/2005 - 09/2012
FM 9/12	01/2002 - 09/2005
FL 6	

All reference numbers are for referencing purposes only and must not be mentioned in invoices to the vehicle owners.

112730

Installation cone kit

VoR 21210402

Material: Steel

Clearance product !



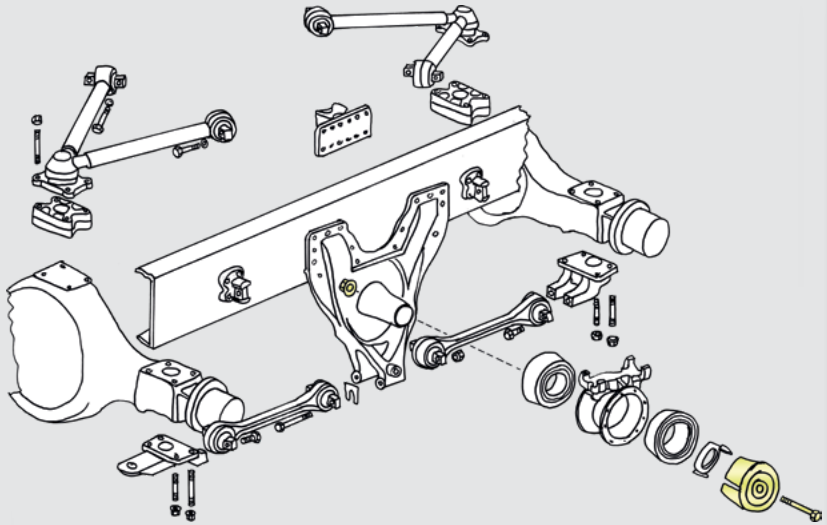

kg 4,4

The washers in this kit are slightly cone-shaped. Please stack them like this:
Прокладки в данном комплекте немного конусо-образные.
Пожалуйста сложите их по следующему примеру:

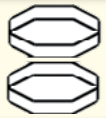

FH (4)	09/2012→
FH	09/2005 - 09/2012
FH 12/16	01/2002 - 09/2005
FM (4)	09/2012→
FM	09/2005 - 09/2012
FM 9/12	01/2002 - 09/2005
FL 6	

All reference numbers are for referencing purposes only and must not be mentioned in invoices to the vehicle owners.

318103

Door handle without lock, right

Clearance product !

ScR

2145648
2005370
1544331
1488410
1423018
1366488
1306410

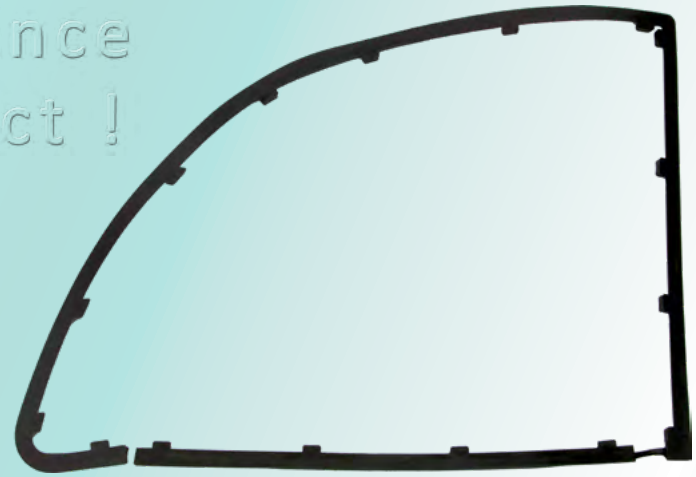

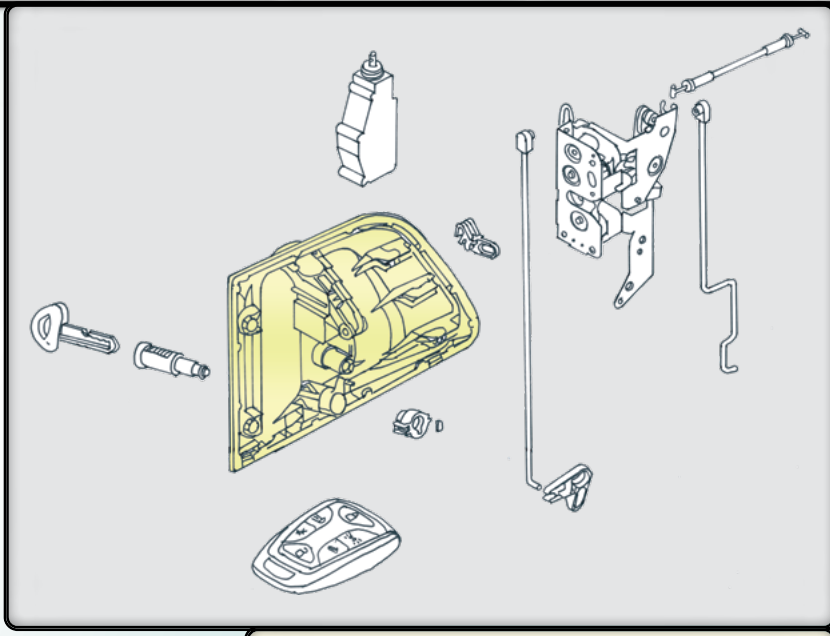



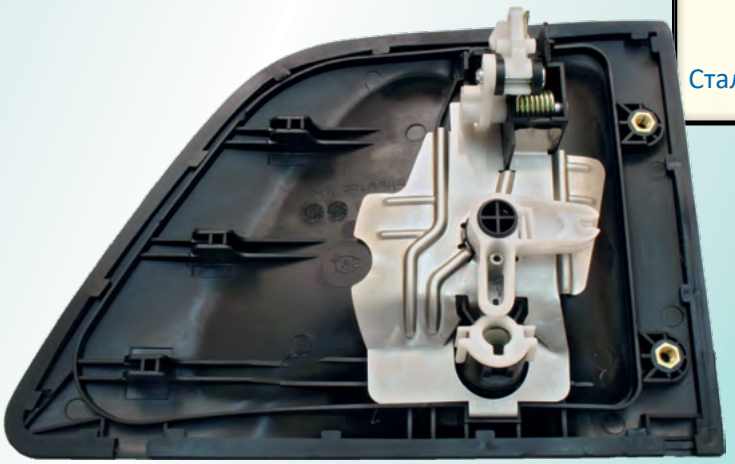

Teräsvahvistettu kuten OE Scania
Steel reinforced as in original Scania
Стальное укрепление как у оригинала Scania

GPR	04/2004 - 2018
94-164	06/1995 - 12/2004

See the lock installation instructions **before** installation.

→ HD 318106



kg 0,73	OE material PA 6-M30	Polyamid 6	+ mineral reinforced	30% filler of weight	-40 → +80 °C
	HD material PA66 + GF30	Polyamide 66	+ glass fiber reinforced	30% filler of weight	-40 → +80 °C

All reference numbers are for referencing purposes only and must not be mentioned in invoices to the vehicle owners.

318783

Lock

ScR

1810345
1519436



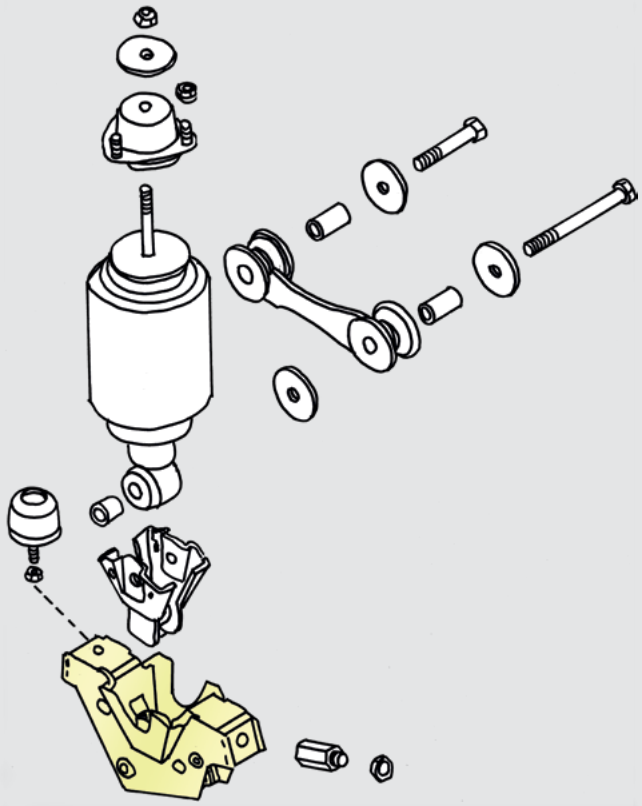

2 /

GPR

94, 114, 124, 144, 164

1292429→
4501901→
9083917→
3547308→

10/2003→

kg 2,90

All reference numbers are for referencing purposes only and must not be mentioned in invoices to the vehicle owners.

313340

Joint

Clearance product !

ScR

1912759
1375228
325614

VoR 1606980

LMI reference:

19537 01
19862 01
25064 01

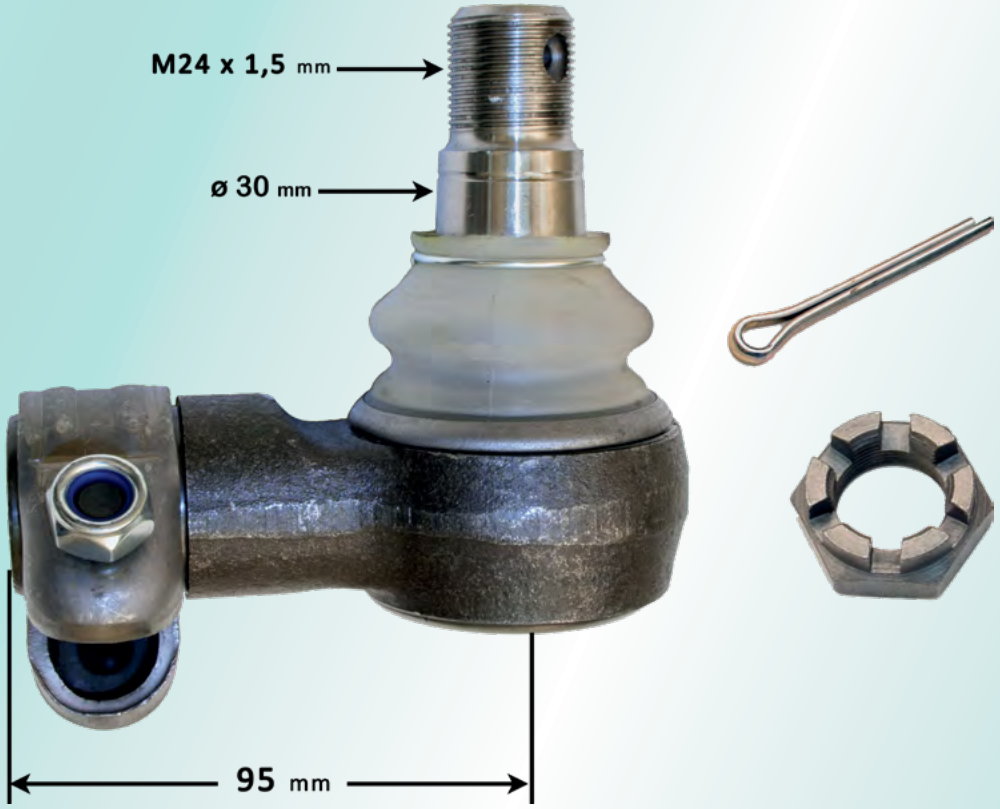

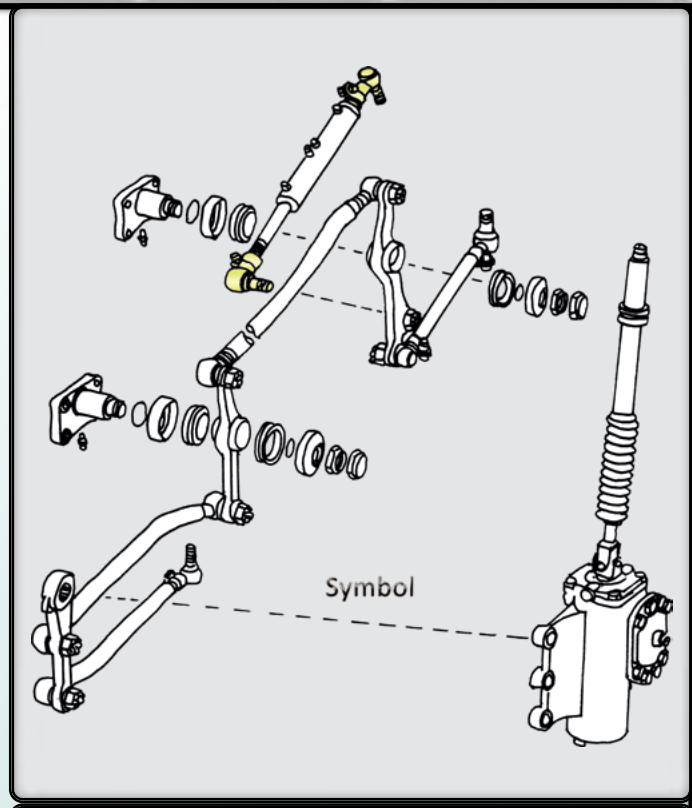

GPR	04/2004 - 2018
94 - 164	06/1995 - 12/2004

kg 1,65

2 /

All reference numbers are for referencing purposes only and must not be mentioned in invoices to the vehicle owners.

107030

Clearance product !

Joint

VoR 20710008

DT reference:	Febi reference:	Sampa reference:	Trucktec reference:
253158	35661	097763	0331055

LMI Lemförder reference:	TRW reference:	PE reference:
31961 01	JTE0136	142.067-00A

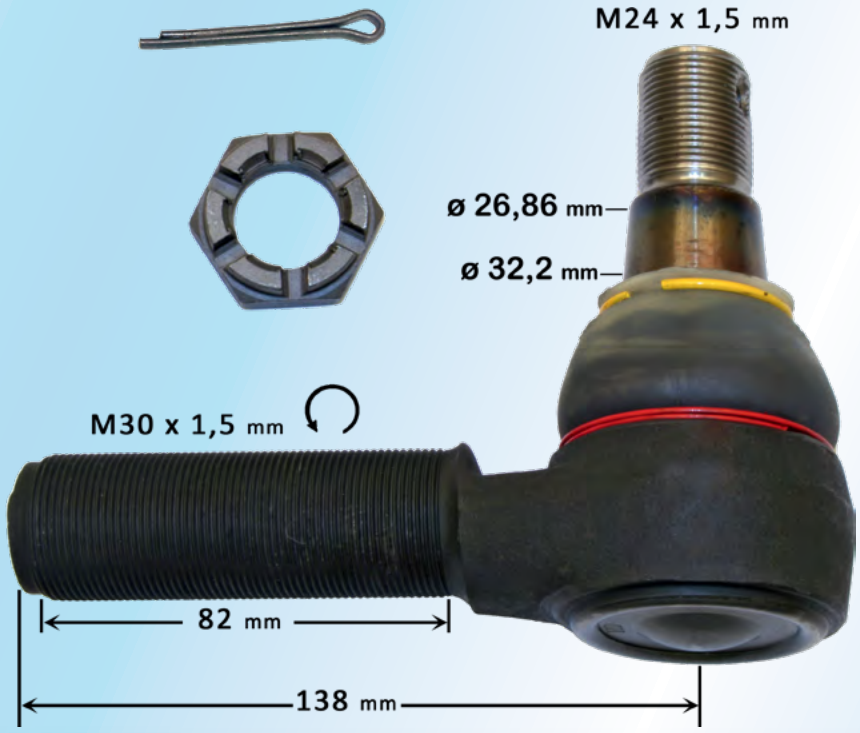

kg 1,83

107031

Clearance product !

Joint

VoR 20581089

DT reference:	Febi reference:	Sampa reference:	Trucktec reference:
253157	35662	097764	0331054

LMI Lemförder reference:	TRW reference:	PE reference:
34527 01	JTE0135	142.061-00A

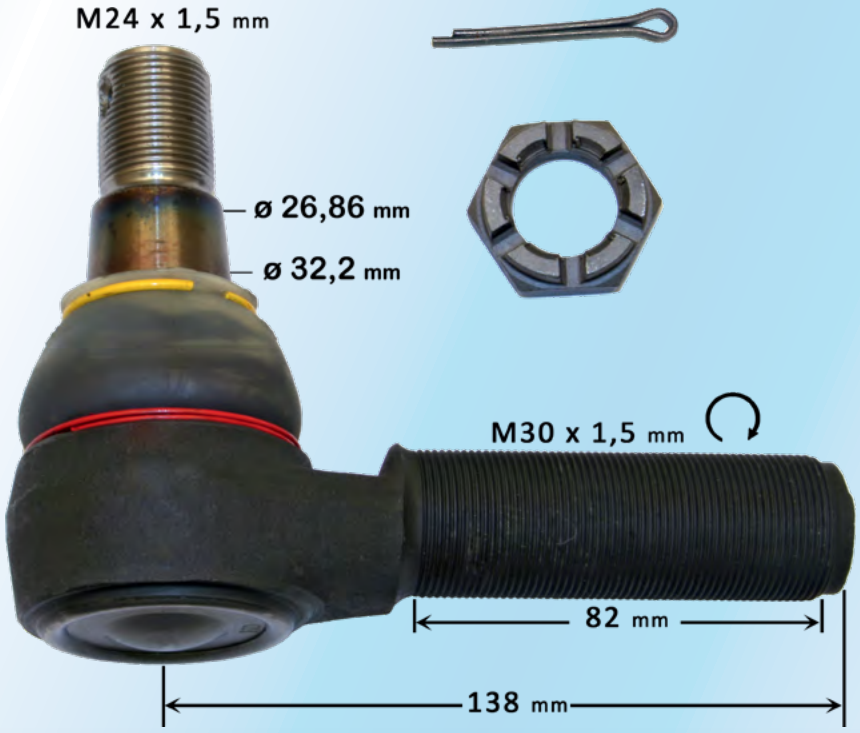

kg 1,80

All reference numbers are for referencing purposes only and must not be mentioned in invoices to the vehicle owners.

109800

Hub cap

Max Ø 148 mm
Inside Ø 114 mm



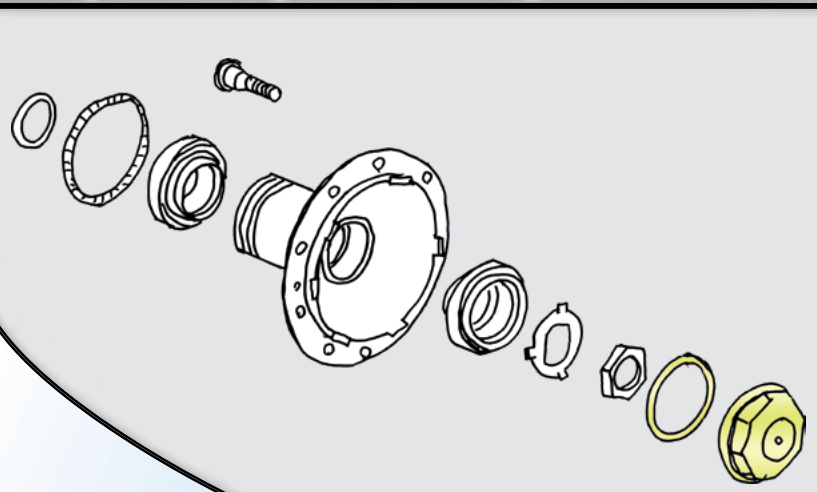

VoR

21302471
3988672
21302475

Reference numbers:

DT	**265069**
Sampa	**080219**
Auger	**54347**
Ryme	**07207**
Stellox	**83-00035-SX**
BTA	**B09-RVI-002**

Material: Aluminum

M128 x 2,0 mm

114 mm

Clearance product !



O-ring material: NBR
133,0 x 3,50 x 140 mm
-30°C - +120°C

VoR **3986189**



kg 0,36

Front / pusher / tag / trailer - axle

FH (4)	09/2012→
FH	09/2005 - 09/2012
FH 12/16	1998 - 09/2005
FM (4)	09/2012→
FM	09/2005 - 09/2012
FM 9/12	09/2003 - 09/2005
FM 7/10/12	1998 - 09/2003

B5 RH/LH, B5 TL (3), B 6/7/9 R
B8R (3), B11R (3), B12 B/M/R
B13R

All reference numbers are for referencing purposes only and must not be mentioned in invoices to the vehicle owners.

109802

Hub cap

Max Ø 128 mm
Inside Ø 102 mm

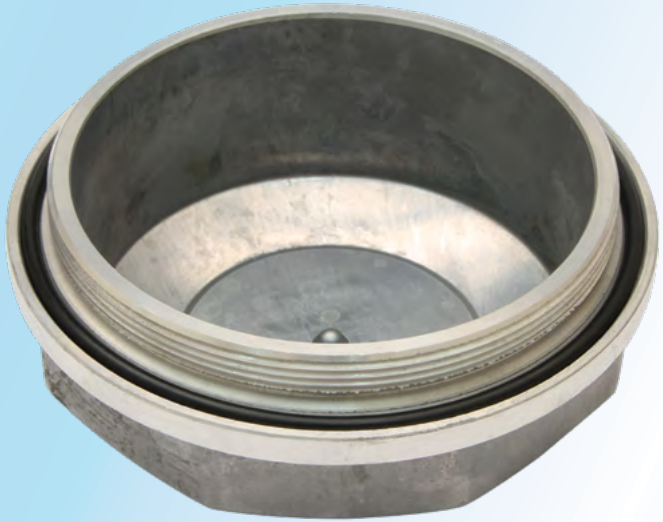

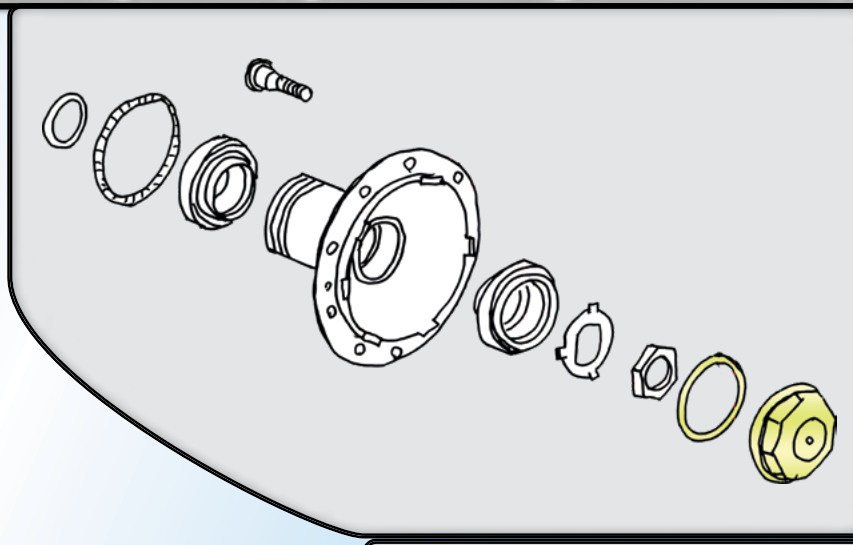

VoR

21301707
20547252
21301708

Reference numbers:

DT	**265076**
Sampa	**080220**
Auger	**54348**
Ryme	**07208**
Stellox	**83-00034-SX**
BTA	**B09-RVI-003**

Material: Aluminum

Clearance product !

M112 x 2,0 mm

114,5 mm

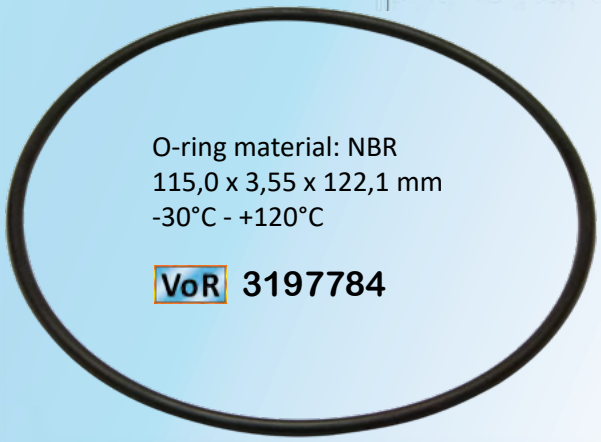

O-ring material: NBR
115,0 x 3,55 x 122,1 mm
-30°C - +120°C

VoR **3197784**



kg 0,39

Front / pusher / tag / trailer - axle

FH (4)	09/2012→
FH	09/2005 - 09/2012
FH 12/16	01/2002 - 09/2005
FM (4)	09/2012→
FM	09/2005 - 09/2012
FM 9/12	01/2002 - 09/2005
FM 7/10/12	1998 - 01/2002

B 7 FP

All reference numbers are for referencing purposes only and must not be mentioned in invoices to the vehicle owners.

112958

Shaft

VoR

21838764
21960568

208 mm
M24 x 3,0 mm



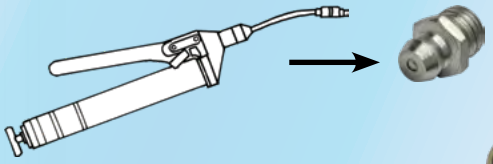

M8 x 1,0 mm

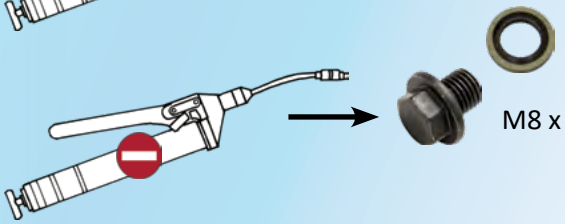

M8 x 1,0 mm

kg 0,84

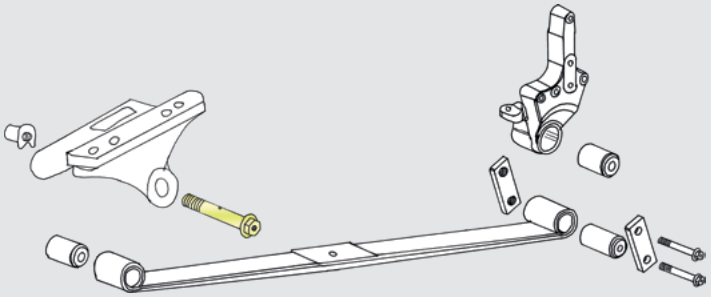

FH (4)	09/2012→
FM (4)	09/2012→

Suitable bushings:

HD 112964
VoR 21175831

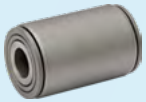

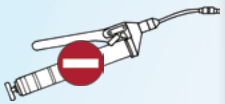

HD 112965
VoR 22221048

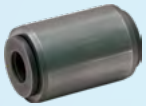

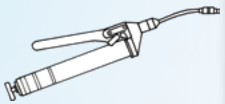

All reference numbers are for referencing purposes only and must not be mentioned in invoices to the vehicle owners.

112957

Shaft

VoR

21838766
21960569

170 mm
M24 x 3.0 mm

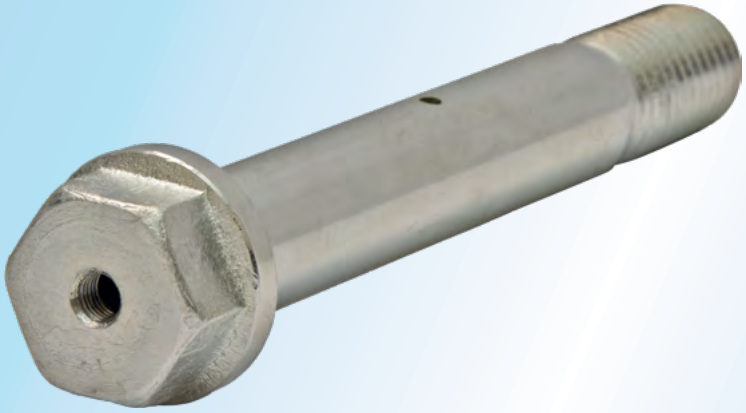

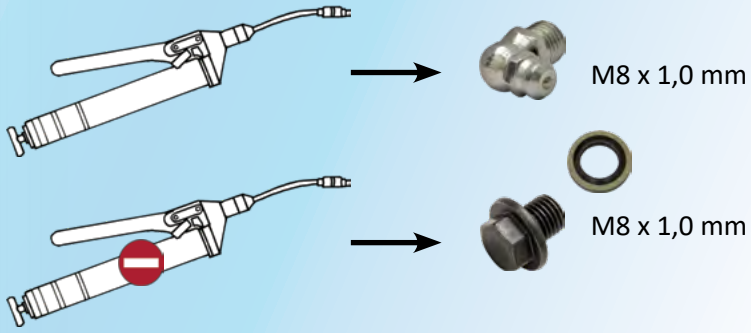

M8 x 1,0 mm

M8 x 1,0 mm

kg 0,7

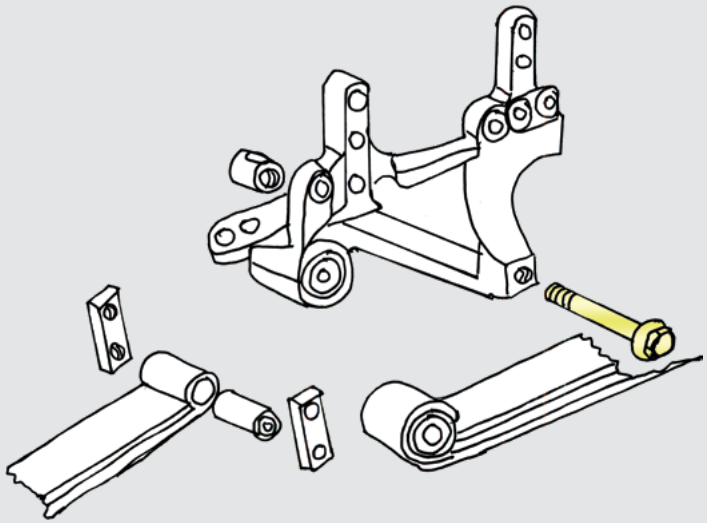

The middle support when 2 front axles.

FH (4)	09/2012→
FM (4)	09/2012→

(Only →)

All reference numbers are for referencing purposes only and must not be mentioned in invoices to the vehicle owners.